DESIGN	FED. RD. DIV. NO.	FEDERAL AID PROJECT NO.		HIGHWAY NO.
GRAPHICS	6	STP ()VRU		IH-14
	STATE	DISTRICT	COUNTY	SHEET NO.
CHECK	TEXAS	WACO	BELL	1
CHECK	CONTROL	SECTION	JOB	
	0231	03	156	

INDEX OF SHEETS

SHEET NO.	DESCRIPTION
1	TITLE SHEET
2	INDEX OF SHEETS

STATE OF TEXAS
DEPARTMENT OF TRANSPORTATION

PLANS OF PROPOSED
STATE HIGHWAY IMPROVEMENT

FEDERAL AID PROJECT: STP ()VRU

BELL COUNTY

IH-14

	CSJ 0231-03-156		PROJECT NET	
ROADWAY:	FT= 18,644.00	MI.= 3.531	FT= 18,644.00	MI.= 3.531
BRIDGE:	FT= 1307.00	MI.= 0.248	FT= 1307.00	MI.= 0.248
TOTAL:	FT= 19,951.00	MI.= 3.779	FT= 19,951.00	MI.= 3.779

CSJ 0231-03-156 LIMITS: FROM: JASPER DRIVE TO: ROSEWOOD DR

FOR THE CONSTRUCTION OF SAFETY
CONSISTING OF INSTALL ILLUMINATION

YEAR	ADT
2022	71272
2042	99781

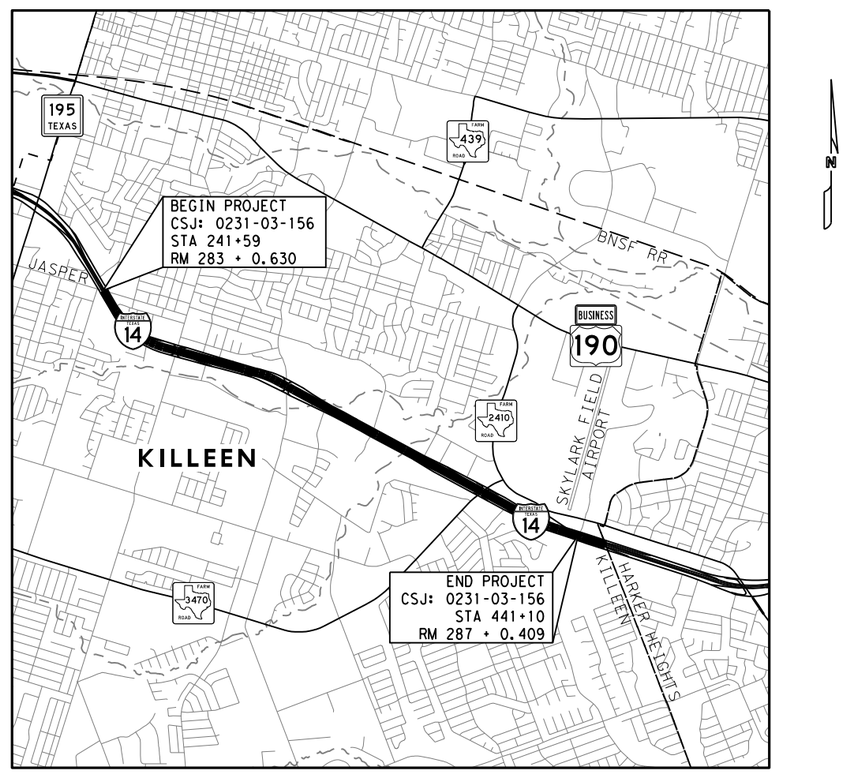

ATTACHMENT No. XX-XX TO SPECIAL AGREEMENT FOR CONSTRUCTION, MAINTENANCE AND OPERATION OF CONTINUOUS HIGHWAY ILLUMINATION SYSTEM WITHIN MUNICIPALITIES, DATED . THE CITY-STATE CONSTRUCTION, MAINTENANCE AND OPERATION RESPONSIBILITIES SHALL BE AS HERETOFORE AGREED TO, ACCEPTED, AND SPECIFIED IN THE AGREEMENT TO WHICH THESE PLANS ARE MADE A PART.

EXCEPTIONS: NONE
EQUATIONS: NONE
RR CROSSINGS: NONE
SCALE: 1" = 5280' (1.0 MI)

SPECIFICATIONS ADOPTED BY THE TEXAS DEPARTMENT OF TRANSPORTATION, SEPTEMBER 1, 2024 AND SPECIFICATION ITEMS LISTED AND DATED AS FOLLOWS, WILL GOVERN ON THIS PROJECT: REQUIRED CONTRACT PROVISIONS FOR ALL FEDERAL - AID CONSTRUCTION CONTRACTS(FORM FHWA 1273, OCTOBER 2023).

Texas Department of Transportation

Recommended for Letting

Area Engineer

Recommended for Letting

Director of Transportation Planning & Development

Approved for Letting

District Engineer

©2026 by Texas Department of Transportation; all rights reserved.

c:\txdot\pw*online\txdot3\patrick.jalufka\d0785490\Title Sheet.dgn 7/11/2025 4:29:16 PM NODE

	SHEET	DESCRIPTION
		GENERAL
	1	TITLE SHEET
	2	INDEX OF SHEETS
	3	GENERAL NOTES
	4	ESTIMATE & QUANTITY
	5-6	CONSOLIDATED SUMMARIES
		TRAFFIC CONTROL
	7	SEQUENCE OF CONSTRUCTION
		TRAFFIC CONTROL PLAN STANDARDS
*	8-19	BC(1)-21 THRU BC(12)-21
*	20-24	TCP(1-1)-18 THRU TCP(1-5)-18
*	25-26	TCP(2-1)-18 THRU TCP(2-2)-18
*	27	TCP(2-3)-23
*	28	TCP(2-4)-18
*	29	TCP(5-1)-18
*	30-34	TCP(6-1)-12 THRU TCP(6-5)-12
		ROADWAY
	35-39	MBGF LAYOUT
		ROADWAY DETAILS STANDARDS
*	40	GF(31)-19
*	41	GF(31)MS-19
*	42	GF(31)DAT-19
*	43	RAIL-ADJ(A)-19
*	44	SGT(11S)31-18
*	45	SGT(12S)31-18
*	46	SGT(15)31-20
		TRAFFIC
	47-66	REMOVAL LAYOUT
	67-70	EXISTING ELECTRICAL SCHEMATIC
	71-83	SOIL BORING LOGS
	84	ILLUMINATION GENERAL NOTES & UTILITY LEGEND
	85-104	ILLUMINATION LAYOUT
	105	ELECTRICAL SERVICE DATA
	106-110	PROPOSED ELECTRICAL SCHEMATIC
		TRAFFIC STANDARDS
*	111-117	ED(1)-25 THRU ED(7)-25
*	118	ED(9)-25
*	119	ED(11)-25
*	120-121	HMIF(1)-98 THRU HMIF(2)-98
*	122-124	RID(1)-20 THRU RID(3)-20
*	125-128	RIP(1)-19 THRU RIP(4)-19
*	129-134	D & OM(1)-25 THRU D &OM(6)-25
*	135	D & OM(VIA)-25
		ENVIRONMENTAL
	136-137	STORMWATER POLLUTION PREVENTION PLAN (SWP3)
	138	ENVIRONMENTAL PERMITS, ISSUES AND COMMITMENTS (EPIC)
		ENVIRONMENTAL STANDARDS
*	139-148	TA-BMP (WACO DISTRICT STANDARD)
*	149-150	EC(1)-16 THRU EC(2)-16)

* THE STANDARD SHEETS SPECIFICALLY IDENTIFIED ABOVE HAVE BEEN SELECTED BY ME OR UNDER MY DIRECT SUPERVISION AS BEING APPLICABLE TO THIS PROJECT.

INTERIM REVIEW

THIS DOCUMENT IS RELEASED FOR THE PURPOSE OF INTERIM REVIEW UNDER THE AUTHORITY OF

PATRICK JALUFKA P.E., ON: 7/11/2025

IT IS NOT TO BE USED FOR CONSTRUCTION

PRELIMINARY NOT FOR CONSTRUCTION

© 2026 Texas Department of Transportation

INDEX OF SHEETS

SHEET 1 OF 1

CHANGE ORDER	FED. RD. DIV. NO.	CONT	SECT	JOB	HIGHWAY
	6	0231	03	156	IH-14
	STATE	DIST	COUNTY		SHEET NO.
	TEXAS	WACO	BELL		2

c:\txdot\pwonline\txdot3\patrick.jalufka\d0785490\Index of Sheets.dgn 7/11/2025 4:29:33 PM
NODE

SUMMARY OF ROADWAY ITEMS

MBGF LAYOUT SHEET NO.	104	432	540	540	540	542	544	544	658
	7005	7013	7002	7015	7028	7001	7001	7003	7018
	REMOVING CONCRETE(MOW STRIP)	RIPRAP (MOW STRIP)(4 IN)	MTL W-BEAM GD FEN (STEEL POST)	DOWNSTREAM ANCHOR TERMINAL SECTION	MTL BM GD FEN TRANS (31"-28")	REMOVE METAL BEAM GUARD FENCE	GUARDRAIL END TREATMENT (INSTALL)	GUARDRAIL END TREATMENT (REMOVE)	INSTL DEL ASSM (D-SW)SZ 1(BRF)GF2
	LF	CY	LF	EA	EA	LF	EA	EA	EA
1 OF 5		15	175		1	50	1	1	4
2 OF 5	53	10	75				1	1	3
3 OF 5		11	100	1			1		3
4 OF 5		12	125	1			1		3
5 OF 5	106	10	100				1	1	3
PROJECT TOTAL:	159	58	575	2	1	50	5	3	16

SUMMARY OF ILLUMINATION REMOVAL ITEMS

ILLUMINATION REMOVAL LAYOUT SHEET NO.	610	610	624	628	690	690
	7006	7009	7013	7002	7144	7150
	REMOVE RD IL ASM (BRIDGE MOUNT)	REMOVE RD IL ASM (TRANS-BASE)	REMOVE GROUND BOX	REMOVE ELECTRICAL SERVICES	REMOVE ABOVE-GROUND CONDUIT	REMOVE CONDUCTOR
	EA	EA	EA	EA	LF	LF
1 OF 20						
2 OF 20		3	2			2046
3 OF 20				1		
4 OF 20	1	2	3		261	5573
5 OF 20		2				798
6 OF 20				1		87
7 OF 20		1				1575
8 OF 20		4	4	1		9016
9 OF 20		4	3			5676
10 OF 20		4	4			5262
11 OF 20		3				3162
12 OF 20						
13 OF 20						
14 OF 20			1	1		624
15 OF 20		6				4524
16 OF 20		5		1		2817
17 OF 20		3	2			4623
18 OF 20			3	1		2286
19 OF 20						
20 OF 20						
PROJECT TOTAL:	1	37	22	6	261	48069

© 2026 Texas Department of Transportation

CONSOLIDATED SUMMARIES

SHEET 1 OF 2

CHANGE ORDER	FED. RD. DIV. NO.	CONT	SECT	JOB	HIGHWAY
	6	0231	03	156	IH-14
	STATE	DIST	COUNTY		SHEET NO.
	TEXAS	WACO	BELL		5

c:\txdot\pw*online\txdot3\patrick.jalufka\d0785490\Consolidated Summaries.dgn 7/11/2025 4:29:50 PM
NODE

SUMMARY OF ILLUMINATION ITEMS

ILLUMINATION LAYOUT SHEET NO.	416	416	432	610	618	618	618	624	624	628	690	690	6013	6071	6083	6083
	7035	7040	7001	7124	7036	7061	7090	7014	7015	7049	7218	7220	7006	7003	7001	7002
	DRILL SHAFT (HIGH MAST POLE) (48 IN)	DRILL SHAFT (RDWY ILL POLE) (30 IN)	RIPRAP (CONC)(4 IN)	IN RD IL (TY SA) 40T-8 (250W EQ) LED	CONDT (PVC)(SCH 40)(3")	CONDT (PVC)(SCH 80)(3") (BORE)	CONDUIT (PREPARE)	INSTL GROUND BOX (W/SECURE LID)	RETRO GROUND BOX (W/SECURE LID)	ELC SRV TY A 240/480 060(NS)SS (E)SP(U)	REPLACE FUSE	REPLACE BREAKAWAY FUSE HOLDER	GROUND BOX (PREPARE)	ALUMINUM ELECTRICAL COND (#6 XHHW)	LED HI MST(100 FT)(80MPH)(6FIXT)(TY B)	LED HI MST(100 FT)(80MPH)(6FIXT)(TY B)(SHLD)
	LF	LF	CY	EA	LF	LF	LF	EA	EA	EA	EA	EA	EA	LF	EA	EA
1 OF 20																
2 OF 20	30		4.66		714	243		6		1				3887		2
3 OF 20	18		2.33		1072	225		5	3					5195		1
4 OF 20	50		4.66		416		637	3	7					2196	2	
5 OF 20	23		2.33		1407			4						4383	1	
6 OF 20	45		4.66		2145	226		7	5	2			1	8111	2	
7 OF 20	18		2.33	1	1448	54	525	5	1					6081	1	
8 OF 20	45		4.66		398	71	1136	4	8	1				5605	2	
9 OF 20	25		2.33		1283	210		5						4921	1	
10 OF 20	35		4.66		280			2						840	2	
11 OF 20	25		2.33	2	1896		978	8	6	1				10681	1	
12 OF 20	48		4.66		1124			3						3372	2	
13 OF 20	25	20	2.33	2	851			4		1				2775	1	
14 OF 20	43		4.66		1193			7		1				7152	2	
15 OF 20	15		2.33		1910			5	3				1	5979	1	
16 OF 20	50		4.66		732			3	2	1			1	2196	2	
17 OF 20	18		2.33		1840			7						5913	1	
18 OF 20	18		2.33		820			5		2				4344	1	
19 OF 20																
20 OF 20																
* AS DIRECTED											20	10				
PROJECT TOTAL:	531	20	58	5	19529	1029	3276	83	35	10	20	10	3	83631	22	3

* AS DIRECTED QUANTITIES ARE FOR REPLACING ANTICIPATED BREAKS WHEN REMOVING EXISTING CONDUCTORS

SUMMARY OF EROSION CONTROL ITEMS

LOCATION	164	164	168	506	506	506
	7012	7015	7001	7039	7040	7041
	DRILL SEED (PERM_URBAN_CLAY)	DRILL SEED (TEMP_WARM_COOL)	VEGETATIVE WATERING	TEMP SDMT CONT FENCE (INSTALL)	TEMP SDMT CONT FENCE (INLET PROTECTION)	TEMP SDMT CONT FENCE (REMOVE)
	SY	SY	TGL	LF	LF	LF
AS DIRECTED	2200	2200	36	2800	200	3000
PROJECT TOTAL:	2200	2200	36	2800	200	3000

© 2026 Texas Department of Transportation

CONSOLIDATED SUMMARIES

SHEET 2 OF 2

CHANGE ORDER	FED. RD. DIV. NO.	CONT	SECT	JOB	HIGHWAY
	6	0231	03	156	IH-14
	STATE	DIST	COUNTY		SHEET NO.
	TEXAS	WACO	BELL		6

c:\txdot\pwonline\txdot3\patrick.jalufka\d0785490\Consolidated Summaries.dgn 7/11/2025 4:29:50 PM
NODE

c:\txdot\pwonline\txdot3\patrick.jalufka\d0785494\Sequence of Construction.dgn 7/11/2025 4:30:04 PM

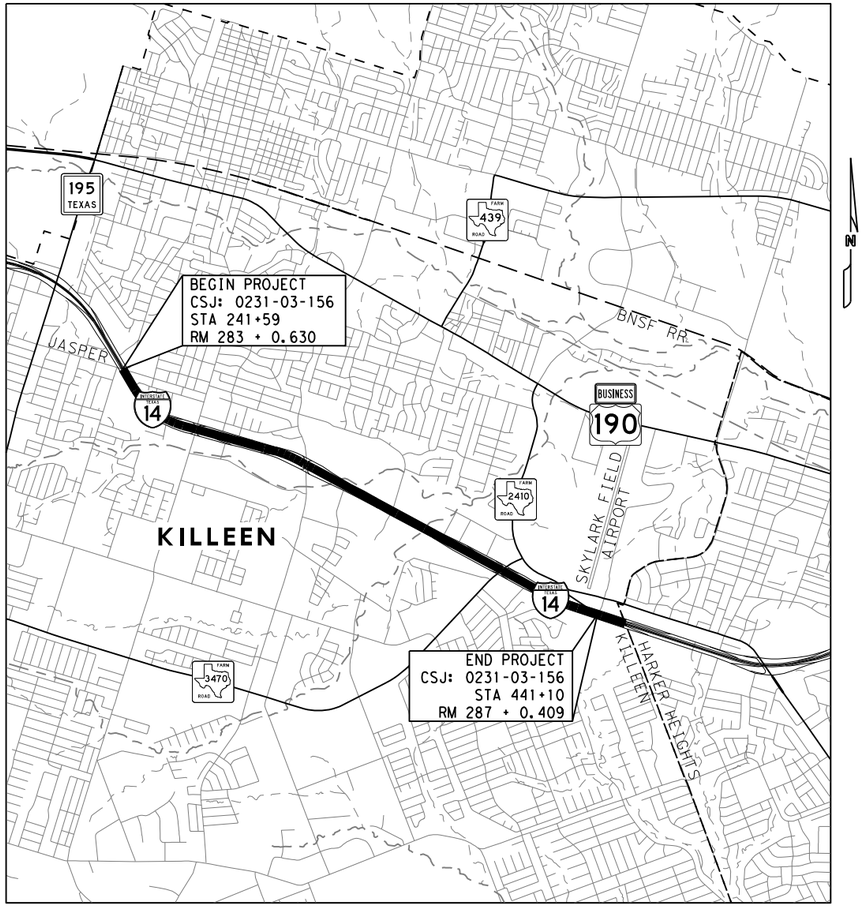

SCALE: 1" = 5280'

VICINITY MAP

1. SIGNS G20-1 WITH PLAQE OR G20-5T, G20-6, G20-2a, G20-2b, CW20-1D, R20-3, R20-5, G20-9T AND R20-5 PLAQUE WILL BE REQUIRED AT PROJECT LIMITS.

2. CW20-1D AND G20-2a WILL BE REQUIRED AT ALL CROSSROADS.

3. G20-1a WILL BE REQUIRED AT ALL MAJOR CROSSROADS.

SIGNAGE LEGEND

G20-1 W/ PLAQUE OR G20-5T	48X26	BEGIN ROAD WORK NEXT X MILES
	48X24	BEGIN ROAD WORK NEXT X MILES
G20-6	48X30	NAME, ADDRESS, CITY, STATE, CONTRACTOR
G20-9T	36X30	BEGIN WORK ZONE
G20-2b	36X18	END WORK ZONE
R20-3	48X42	OBEY WARNING SIGNS STATE LAW
G20-1a	72X36	ROAD WORK NEXT X MILES
CW20-1D	48X48	ROAD WORK AHEAD
R20-5	36X36	TRAFFIC FINES DOUBLE
R20-5 PLAQUE	36X18	WHEN WORKERS ARE PRESENT
G20-2a	48X24	END ROAD WORK

NOTES:

1. ALL TRAFFIC CONTROL DEVICES WILL CONFORM WITH THE TEXAS "MANUAL ON UNIFORM TRAFFIC CONTROL DEVICES FOR STREETS AND HIGHWAYS" (TMUTCD), AND WILL BE MAINTAINED AS DIRECTED. ADDITIONAL GUIDELINES FOR TRAFFIC CONTROL DEVICES MAY BE FOUND IN THE TMUTCD.

2. FOR CHANNELING DEVICE PLACEMENT AND SPACING FOR ALL PHASES, REFER TO THE TCP STANDARDS.

GENERAL

A. INSTALL ALL SIGNS, BARRICADES AND TRAFFIC CONTROL DEVICES AS SHOWN AND IN ACCORDANCE WITH THE STANDARD BC SHEETS AND AS DIRECTED.

B. ADDITIONAL SIGNS, BARRICADES OR TRAFFIC CONTROL DEVICES OTHER THAN THOSE SPECIFIED MAY BE REQUIRED FOR THE SAFE MOVEMENT OF TRAFFIC THROUGH THE PROJECT. PAYMENT FOR ALL SUCH SIGNS, BARRICADES OR TRAFFIC CONTROL DEVICES WILL BE CONSIDERED SUBSIDIARY TO THE ITEM "BARRICADES, SIGNS AND TRAFFIC HANDLING".

C. WORK SITES SHOULD BE CAREFULLY MONITORED TO ENSURE THAT TRAFFIC CONTROL MEASURES ARE OPERATING EFFECTIVELY AND THAT ALL DEVICES USED ARE CLEARLY VISIBLE, CLEAN AND IN GOOD REPAIR.

D. THE CONTRACTOR WILL PROVIDE SAFE ACCESS TO AND FROM ALL PRIVATE PROPERTY AT ALL TIMES AND IN ALL WEATHER CONDITIONS.

E. THE CONTRACTOR WILL BE REQUIRED TO SUBMIT A DETAILED SCHEDULE OF WORK PRIOR TO THE BEGINNING OF CONSTRUCTION WHICH GENERALLY CONFORMS TO THE SEQUENCE SHOWN ON THE TCP SEQUENCE OF OPERATION BELOW.

F. COMPLETE ALL WORK ON PROJECT AS SHOWN ON THE VARIOUS PLAN SHEETS AND IN COMPLIANCE WITH THE GENERAL NOTES OF THIS CONTRACT.

G. ANY REQUEST TO ALTER THE SEQUENCE OF OPERATION OR TRAFFIC CONTROL PLAN WILL BE SUBMITTED TO THE ENGINEER FOR HIS WRITTEN APPROVAL.

SEQUENCE OF CONSTRUCTION

A. LIMIT THE TIME THAT AN EXISTING SERVICE IS SHUT DOWN TO 10 WORKING DAYS. HAVE THE NEW SERVICE UP AND OPERATIONAL WITHIN THOSE 10 WORKING DAYS.

B. THE CONTRACTOR WILL BE REQUIRED TO SUBMIT A DETAILED SCHEDULE OF WORK TO THE AREA ENGINEER PRIOR TO THE BEGINNING OF CONSTRUCTION, WHICH GENERALLY CONFORMS TO THE FOLLOWING SEQUENCE:

1. SET PROJECT BARRICADES.
2. REMOVE AND INSTALL METAL BEAM GUARD FENCE.
2. INSTALL PROPOSED CONDUIT AND GROUND BOXES.
3. INSTALL HIGH MAST FOUNDATIONS AND SET POLES.
4. INSTALL NEW ELECTRICAL SERVICES.
5. DISCONNECT EXISTING SERVICE AND REMOVE REQUIRED CONDUIT AND CONDUCTORS.
6. PULL NEW CONDUCTORS.
7. CONNECT NEW ELECTRICAL SERVICE TO POWER.
8. COMPLETE ALL OTHER WORK AS DIRECTED.
9. FINAL CLEAN-UP.

INTERIM REVIEW

THIS DOCUMENT IS RELEASED FOR THE PURPOSE OF INTERIM REVIEW UNDER THE AUTHORITY OF

PATRICK JALUFKA P.E., ON: 7/11/2025

IT IS NOT TO BE USED FOR CONSTRUCTION

PRELIMINARY NOT FOR CONSTRUCTION

© 2026 Texas Department of Transportation

SEQUENCE OF CONSTRUCTION

CHANGE ORDER	FED. RD. DIV. NO.	CONT	SECT	JOB	HIGHWAY
	6	0231	03	156	IH-14
	STATE	DIST		COUNTY	SHEET NO.
	TEXAS	WACO		BELL	7

NODE

BARRICADE AND CONSTRUCTION (BC) STANDARD SHEETS GENERAL NOTES:

1. The Barricade and Construction Standard Sheets (BC sheets) are intended to show typical examples for placement of temporary traffic control devices, construction pavement markings, and typical work zone signs. The information contained in these sheets meet or exceed the requirements shown in the "Texas Manual on Uniform Traffic Control Devices" (TMUTCD).

2. The development and design of the Traffic Control Plan (TCP)is the responsibility of the Engineer.

3. The Contractor may propose changes to the TCP that are signed and sealed by a licensed professional engineer for approval. The Engineer may develop, sign and seal Contractor proposed changes.

4. The Contractor is responsible for installing and maintaining the traffic control devices as shown in the plans. The Contractor may not move or change the approximate location of any device without the approval of the Engineer.

5. Geometric design of lane shifts and detours should, when possible, meet the applicable design criteria contained in manuals such as the American Association of State Highway and Transportation Officials (AASHTO), "A Policy on Geometric Design of Highways and Streets," the TxDOT "Roadway Design Manual" or engineering judgment.

6. When projects abut, the Engineer(s) may omit the END ROAD WORK, TRAFFIC FINES DOUBLE, and other advance warning signs if the signing would be redundant and the work areas appear continuous to the motorists. If the adjacent project is completed first, the Contractor shall erect the necessary warning signs as shown on these sheets, the TCP sheets or as directed by the Engineer. The BEGIN ROAD WORK NEXT X MILES sign shall be revised to show appropriate work zone distance.

7. The Engineer may require duplicate warning signs on the median side of divided highways where median width will permit and traffic volumes justify the signing.

8. All signs shall be constructed in accordance with the details found in the "Standard Highway Sign Designs for Texas," latest edition. Sign details not shown in this manual shall be shown in the plans or the Engineer shall provide a detail to the Contractor before the sign is manufactured.

9. The temporary traffic control devices shown in the illustrations of the BC sheets are examples. As necessary, the Engineer will determine the most appropriate traffic control devices to be used.

10. Where highway construction or maintenance work is being undertaken, other than mobile operations as defined by the Texas Manual on Uniform Traffic Control Devices, CSJ limit signs are required. CSJ limit signs are shown on BC(2). The OBEY WARNING SIGNS STATE LAW sign, STAY ALERT TALK OR TEXT LATER and the WORK ZONE TRAFFIC FINES DOUBLE sign with plaque shall be erected in advance of the CSJ limits. The BEGIN ROAD WORK NEXT X MILES, CONTRACTOR and END ROAD WORK signs shall be erected at or near the CSJ limits. For mobile operations, CSJ limit signs are not required.

11. Traffic control devices should be in place only while work is actually in progress or a definite need exists.

12. The Engineer has the final decision on the location of all traffic control devices.

13. Inactive equipment and work vehicles, including workers' private vehicles must be parked away from travel lanes. They should be as close to the right-of-way line as possible, or located behind a barrier or guardrail, or as approved by the Engineer.

WORKER SAFETY NOTES:

1. Workers on foot who are exposed to traffic or to construction equipment within the right-of-way shall wear high-visibility safety apparel meeting the requirements of ISEA "American National Standard for High-Visibility Apparel," or equivalent revisions, and labeled as ANSI 107-2004 standard performance for Class 2 or 3 risk exposure. Class 3 garments should be considered for high traffic volume work areas or night time work.

2. Except in emergency situations, flagger stations shall be illuminated when flagging is used at night.

COMPLIANT WORKZONE TRAFFIC CONTROL DEVICES

1. Only pre-qualified products shall be used. The "Compliant Work Zone Traffic Control Devices List" (CWZTCD) describes pre-qualified products and their sources.

2. Work zone traffic control devices shall be compliant with the Manual for Assessing safety Hardware (MASH).

THE DOCUMENTS BELOW CAN BE FOUND ON-LINE AT http://www.txdot.gov
COMPLIANT WORK ZONE TRAFFIC CONTROL DEVICES LIST (CWZTCD)
DEPARTMENTAL MATERIAL SPECIFICATIONS (DMS)
MATERIAL PRODUCER LIST (MPL)
ROADWAY DESIGN MANUAL - SEE "MANUALS (ONLINE MANUALS)"
STANDARD HIGHWAY SIGN DESIGNS FOR TEXAS (SHSD)
TEXAS MANUAL ON UNIFORM TRAFFIC CONTROL DEVICES (TMUTCD)
TRAFFIC ENGINEERING STANDARD SHEETS

DISCLAIMER:
The use of this standard is governed by the "Texas Engineering Practice Act". No warranty of any kind is made by TxDOT for any purpose whatsoever. TxDOT assumes no responsibility for the conversion of this standard to other formats or for incorrect results or damages resulting from its use.

DATE: 7/11/2025 4:30:18 PM
FILE: c:\txdot\pw_online\txdot3\patrick.jalufka\d0807940\bc-21.dgn

SHEET 1 OF 12

Texas Department of Transportation — Traffic Safety Division Standard

BARRICADE AND CONSTRUCTION GENERAL NOTES AND REQUIREMENTS

BC(1)-21

FILE: bc-21.dgn	DN: TxDOT	CK: TxDOT	DW: TxDOT	CK: TxDOT
© TxDOT November 2002	CONT	SECT	JOB	HIGHWAY
REVISIONS 4-03 7-13 9-07 8-14 5-10 5-21	0231	03	156	IH-14
	DIST	COUNTY		SHEET NO.
	WACO	BELL		8

DISCLAIMER:
The use of this standard is governed by the "Texas Engineering Practice Act". No warranty of any kind is made by TxDOT for any purpose whatsoever. TxDOT assumes no responsibility for the conversion of this standard to other formats or for incorrect results or damages resulting from its use.

TYPICAL LOCATION OF CROSSROAD SIGNS

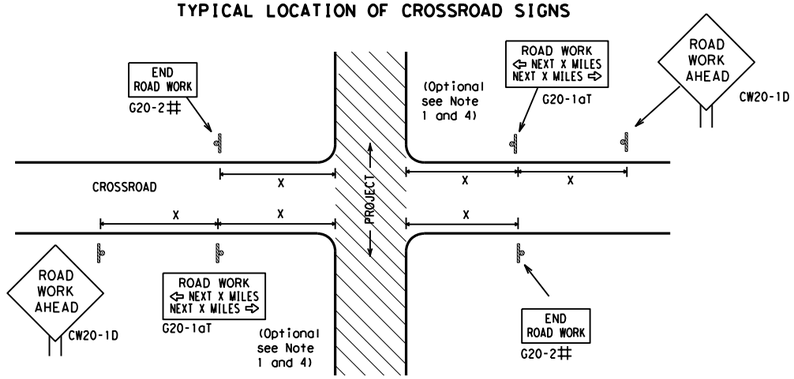

May be mounted on back of "ROAD WORK AHEAD"(CW20-1D) sign with approval of Engineer. (See note 2 below)

1. The typical minimum signing on a crossroad approach should be a "ROAD WORK AHEAD" (CW20-1D)sign and a (G20-2) "END ROAD WORK" sign, unless noted otherwise in plans.
2. The Engineer may use the reduced size 36" x 36" ROAD WORK AHEAD (CW20-1D) sign mounted back to back with the reduced size 36" x 18" "END ROAD WORK"(G20-2) sign on low volume crossroads (see Note 4 under "Typical Construction Warning Sign Size and Spacing"). See the "Standard Highway Sign Designs for Texas" manual for sign details. The Engineer may omit the advance warning signs on low volume crossroads. The Engineer will determine whether a road is low volume as per TMUTCD Part 5. This information shall be shown in the plans.
3. Based on existing field conditions, the Engineer/Inspector may require additional signs such as FLAGGER AHEAD, LOOSE GRAVEL, or other appropriate signs. When additional signs are required, these signs will be considered part of the minimum requirements. The Engineer/Inspector will determine the proper location and spacing of any sign not shown on the BC sheets, Traffic Control Plan sheets or the Work Zone Standard Sheets.
4. The "ROAD WORK NEXT X MILES"(G20-1aT)sign shall be required at high volume crossroads to advise motorists of the length of construction in either direction from the intersection. The Engineer will determine whether a roadway is considered high volume.
5. Additional traffic control devices may be shown elsewhere in the plans for higher volume crossroads.
6. When work occurs in the intersection area, appropriate traffic control devices, as shown elsewhere in the plans or as determined by the Engineer/Inspector, shall be in place.

T-INTERSECTION

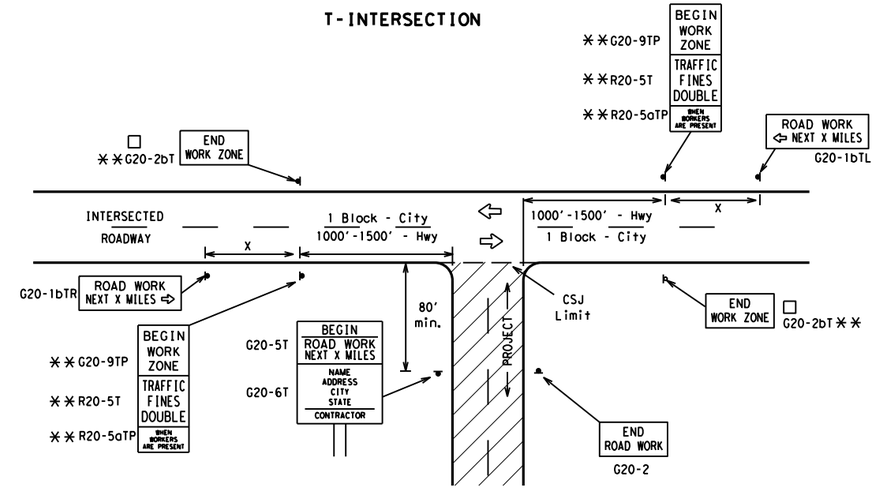

CSJ LIMITS AT T-INTERSECTION

1. The Engineer will determine the types and location of any additional traffic control devices, such as a flagger and accompanying signs, or other signs, that should be used when work is being performed at or near an intersection.
2. If construction closes the road at a T-intersection, the Contractor shall place the "CONTRACTOR NAME"(G20-6T) sign behind the Type 3 Barricades for the road closure (see BC(10) also). The "ROAD WORK NEXT X MILES" left arrow(G20-1bTL) and "ROAD WORK NEXT X MILES" right arrow (G20-1bTR)" signs shall be replaced by the detour signing called for in the plans.

TYPICAL CONSTRUCTION WARNING SIGN SIZE AND SPACING[1,5,6]

SIZE

Sign Number or Series	Conventional Road	Expressway/ Freeway
CW20[4] CW21 CW22 CW23 CW25	48" x 48"	48" x 48"
CW1, CW2, CW7, CW8, CW9, CW11, CW14	36" x 36"	48" x 48"
CW3, CW4, CW5, CW6, CW8-3, CW10, CW12	48" x 48"	48" x 48"

SPACING

Posted Speed	Sign △ Spacing "X"
MPH	Feet (Apprx.)
30	120
35	160
40	240
45	320
50	400
55	500[2]
60	600[2]
65	700[2]
70	800[2]
75	900[2]
80	1000[2]
✱	✱[3]

✱ For typical sign spacings on divided highways, expressways and freeways, see Part 6 of the "Texas Manual on Uniform Traffic Control Devices" (TMUTCD) typical application diagrams or TCP Standard Sheets.

△ Minimum distance from work area to first Advance Warning sign nearest the work area and/or distance between each additional sign.

GENERAL NOTES

1. Special or larger size signs may be used as necessary.
2. Distance between signs should be increased as required to have 1500 feet advance warning.
3. Distance between signs should be increased as required to have 1/2 mile or more advance warning.
4. 36" x 36" "ROAD WORK AHEAD" (CW20-1D)signs may be used on low volume crossroads at the discretion of the Engineer as per TMUTCD Part 5. See Note 2 under "Typical Location of Crossroad Signs".
5. Only diamond shaped warning sign sizes are indicated.
6. See sign size listing in "TMUTCD", Sign Appendix or the "Standard Highway Sign Designs for Texas" manual for complete list of available sign design sizes.

WORK AREAS IN MULTIPLE LOCATIONS WITHIN CSJ LIMITS

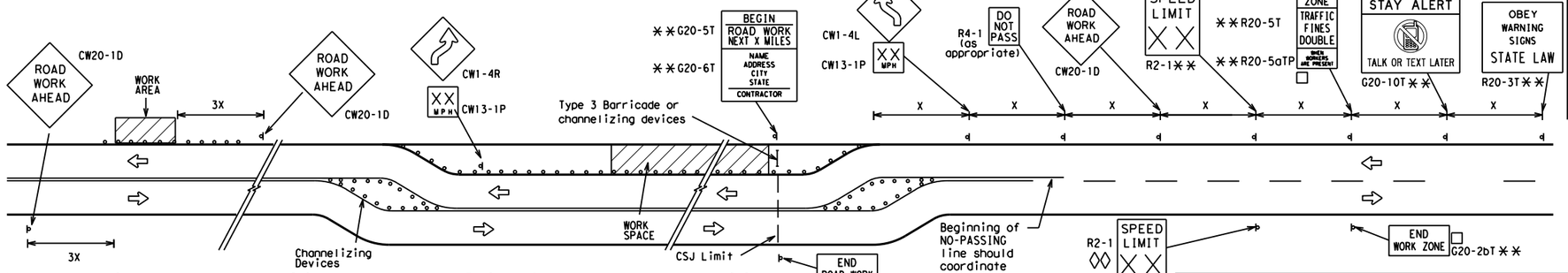

When extended distances occur between minimal work spaces, the Engineer/Inspector should ensure additional "ROAD WORK AHEAD"(CW20-1D)signs are placed in advance of these work areas to remind drivers they are still within the project limits. See the applicable TCP sheets for exact location and spacing of signs and channelizing devices.

SAMPLE LAYOUT OF SIGNING FOR WORK BEGINNING DOWNSTREAM OF THE CSJ LIMITS

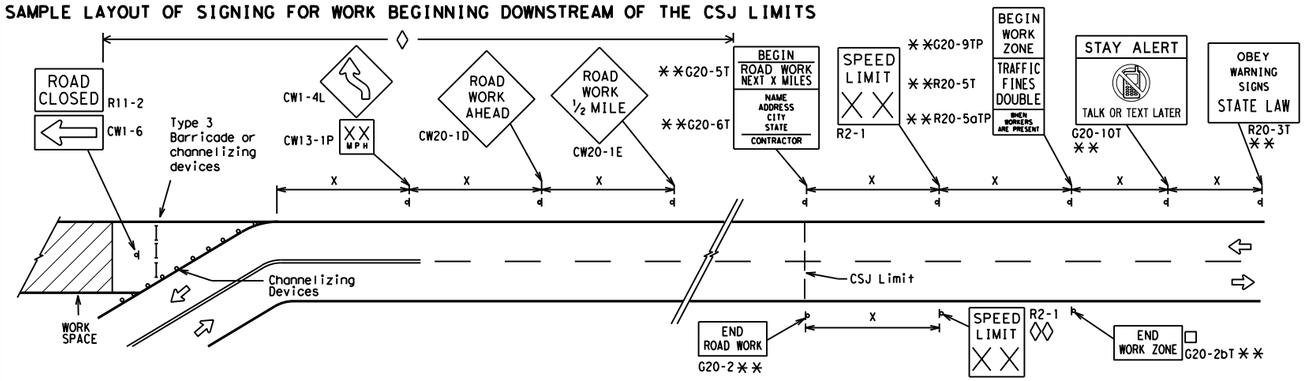

SAMPLE LAYOUT OF SIGNING FOR WORK BEGINNING AT THE CSJ LIMITS

NOTES

The Contractor shall determine the appropriate distance to be placed on the G20-1 series signs and "BEGIN ROAD WORK NEXT X MILES"(G20-5T)sign for each specific project. This distance shall replace the "X" and shall be rounded to the nearest whole mile with the approval of the Engineer. No decimals shall be used.

□ The "BEGIN WORK ZONE"(G20-9TP) and "END WORK ZONE" (G20-2bT) shall be used as shown on the sample layout when advance signs are required outside the CSJ Limits. They inform the motorist of entering or leaving a part of the work zone lying outside the CSJ Limits where traffic fines may double if workers are present.

✱✱ CSJ limit signing is required for highway construction and maintenance work, with the exception of mobile operations.

◊ Area for placement of "ROAD WORK AHEAD" (CW20-1D)sign and other signs or devices as called for on the Traffic Control Plan.

◊◊ Contractor will install a regulatory speed limit sign at the end of the work zone.

LEGEND

⊢⊣	Type 3 Barricade
○ ○ ○	Channelizing Devices
▬	Sign
X	See Typical Construction Warning Sign Size and Spacing chart or the TMUTCD for sign spacing requirements.

SHEET 2 OF 12

Texas Department of Transportation — Traffic Safety Division Standard

BARRICADE AND CONSTRUCTION PROJECT LIMIT

BC(2)-21

FILE: bc-21.dgn	DN: TxDOT	CK: TxDOT	DW: TxDOT	CK: TxDOT
© TxDOT November 2002	CONT	SECT	JOB	HIGHWAY
REVISIONS	0231	03	156	IH-14
9-07 8-14	DIST		COUNTY	SHEET NO.
7-13 5-21	WACO		BELL	9

DATE: 7/11/2025 4:30:18 PM
FILE: c:\txdot\pw_onlinetxdot3\patrick.jalufka\d0807940\bc-21.dgn

TYPICAL APPLICATION OF WORK ZONE SPEED LIMIT SIGNS

Work zone speed limits shall be regulatory, established in accordance with the "Procedures for Establishing Speed Zones," and approved by the Texas Transportation Commission, or by City Ordinance when within Incorporated City Limits.

Reduced speeds should only be posted in the vicinity of work activity and not throughout the entire project.

Regulatory work zone speed signs (R2-1) shall be removed or covered during periods when they are not needed.

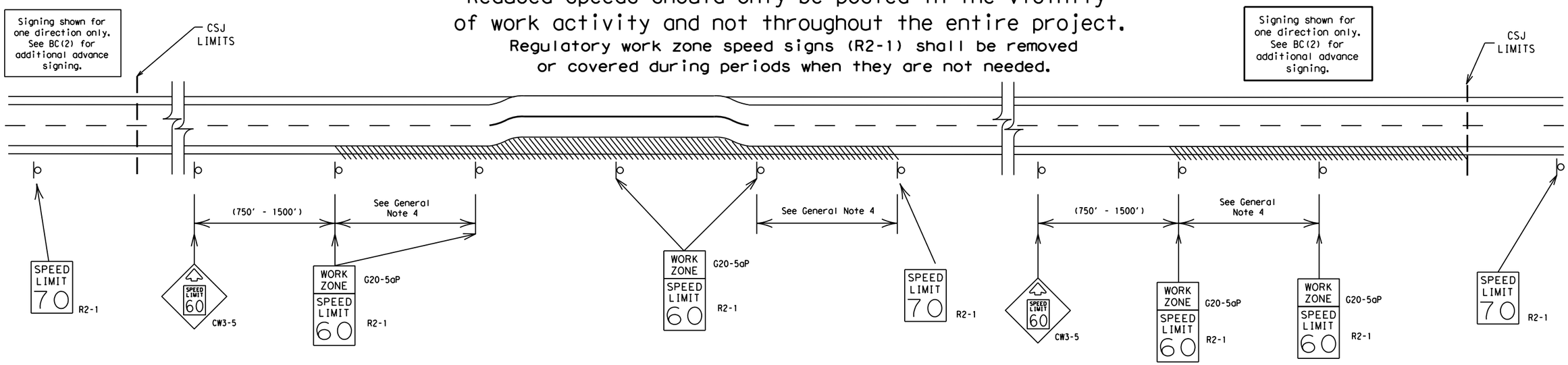

GUIDANCE FOR USE:

LONG/INTERMEDIATE TERM WORK ZONE SPEED LIMITS

This type of work zone speed limit should be included on the design of the traffic control plans when restricted geometrics with a lower design speed are present in the work zone and modification of the geometrics to a higher design speed is not feasible.

Long/Intermediate Term Work Zone Speed Limit signs, when approved as described above, should be posted and visible to the motorist when work activity is present. Work activity may also be defined as a change in the roadway that requires a reduced speed for motorists to safely negotiate the work area, including:

a) rough road or damaged pavement surface
b) substantial alteration of roadway geometrics (diversions)
c) construction detours
d) grade
e) width
f) other conditions readily apparent to the driver

As long as any of these conditions exist, the work zone speed limit signs should remain in place.

SHORT TERM WORK ZONE SPEED LIMITS

This type of work zone speed limit may be included on the design of the traffic control plans when workers or equipment are not behind concrete barrier, when work activity is within 10 feet of the traveled way or actually in the traveled way.

Short Term Work Zone Speed Limit signs should be posted and visible to the motorists only when work activity is present. When work activity is not present, signs shall be removed or covered.
(See Removing or Covering on BC(4)).

GENERAL NOTES

1. Regulatory work zone speed limits should be used only for sections of construction projects where speed control is of major importance.
2. Regulatory work zone speed limit signs shall be placed on supports at a 7 foot minimum mounting height.
3. Speed zone signs are illustrated for one direction of travel and are normally posted for each direction of travel.
4. Frequency of work zone speed limit signs should be:
   40 mph and greater 0.2 to 2 miles
   35 mph and less 0.2 to 1 mile
5. Regulatory speed limit signs shall have black legend and border on a white reflective background (See "Reflective Sheeting" on BC(4)).
6. Fabrication, erection and maintenance of the"ADVANCE SPEED LIMIT"(CW3-5)sign, "WORK ZONE"(G20-5aP) plaque and the "SPEED LIMIT"(R2-1)signs shall not be paid for directly, but shall be considered subsidiary to Item 502.
7. Turning signs from view, laying signs over or down will not be allowed, unless as otherwise noted under "REMOVING OR COVERING" on BC(4).
8. Techniques that may help reduce traffic speeds include but are not limited to:
   A. Law enforcement.
   B. Flagger stationed next to sign.
   C. Portable changeable message sign (PCMS).
   D. Low-power (drone) radar transmitter.
   E. Speed monitor trailers or signs.
9. Speeds shown on details above are for illustration only. Work Zone Speed Limits should only be posted as approved for each project.
10. For more specific guidance concerning the type of work, work zone conditions and factors impacting allowable regulatory construction speed zone reduction see TxDOT form #1204 in the TxDOT e-form system.

DISCLAIMER:
The use of this standard is governed by the "Texas Engineering Practice Act". No warranty of any kind is made by TxDOT for any purpose whatsoever. TxDOT assumes no responsibility for the conversion of this standard to other formats or for incorrect results or damages resulting from its use.

DATE: 7/11/2025 4:30:18 PM
FILE: c:\txdot\pw_online\txdot3\patrick.jalufka\d0807940\bc-21.dgn

Texas Department of Transportation — Traffic Safety Division Standard

BARRICADE AND CONSTRUCTION WORK ZONE SPEED LIMIT

BC(3)-21

FILE: bc-21.dgn	DN: TxDOT	CK: TxDOT	DW: TxDOT	CK: TxDOT	
© TxDOT November 2002	CONT	SECT	JOB	HIGHWAY	
REVISIONS	0231	03	156	IH-14	
9-07 8-14	DIST		COUNTY		SHEET NO.
7-13 5-21	WACO		BELL		10

DISCLAIMER:
The use of this standard is governed by the "Texas Engineering Practice Act". No warranty of any kind is made by TxDOT for any purpose whatsoever. TxDOT assumes no responsibility for the conversion of this standard to other formats or for incorrect results or damages resulting from its use.

TYPICAL MINIMUM CLEARANCES FOR LONG TERM AND INTERMEDIATE TERM SIGNS

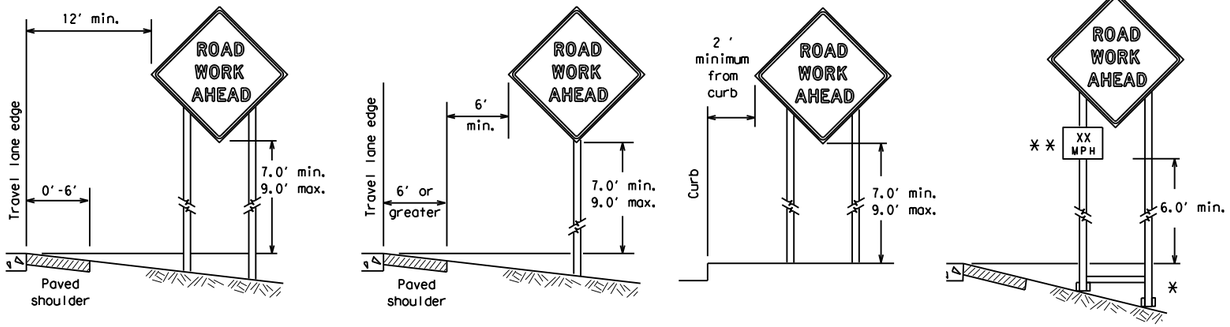

* When placing skid supports on unlevel ground, the leg post lengths must be adjusted so the sign appears straight and plumb. Objects shall NOT be placed under skids as a means of leveling.

** When plaques are placed on dual-leg supports, they should be attached to the upright nearest the travel lane. Supplemental plaques (advisory or distance) should not cover the surface of the parent sign.

ATTACHMENT FOR SIGN SUPPORTS

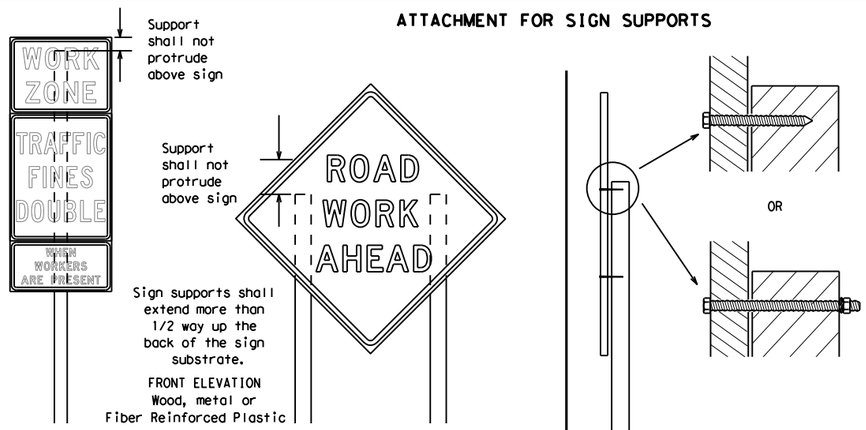

Attachment to wooden supports will be by bolts and nuts or screws. Use TxDOT's or manufacturer's recommended procedures for attaching sign substrates to other types of sign supports

Nails shall NOT be allowed. Each sign shall be attached directly to the sign support. Multiple signs shall not be joined or spliced by any means. Wood supports shall not be extended or repaired by splicing or other means.

Splicing embedded perforated square metal tubing in order to extend post height will only be allowed when the splice is made using four bolts, two above and two below the spice point. Splice must be located entirely behind the sign substrate, not near the base of the support. Splice insert lengths should be at least 5 times nominal post size, centered on the splice and of at least the same gauge material.

STOP/SLOW PADDLES

1. STOP/SLOW paddles are the primary method to control traffic by flaggers. The STOP/SLOW paddle size should be 24" x 24".
2. STOP/SLOW paddles shall be retroreflectorized when used at night.
3. STOP/SLOW paddles may be attached to a staff with a minimum length of 6' to the bottom of the sign.
4. Any lights incorporated into the STOP or SLOW paddle faces shall only be as specifically described in Section 6E.03 Hand Signaling Devices in the TMUTCD.

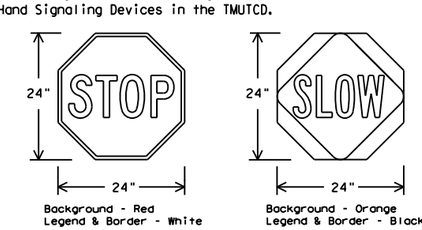

SHEETING REQUIREMENTS (WHEN USED AT NIGHT)		
USAGE	COLOR	SIGN FACE MATERIAL
BACKGROUND	RED	TYPE B OR C SHEETING
BACKGROUND	ORANGE	TYPE B_{FL} OR C_{FL} SHEETING
LEGEND & BORDER	WHITE	TYPE B OR C SHEETING
LEGEND & BORDER	BLACK	ACRYLIC NON-REFLECTIVE FILM

CONTRACTOR REQUIREMENTS FOR MAINTAINING PERMANENT SIGNS WITHIN THE PROJECT LIMITS

1. Permanent signs are used to give notice of traffic laws or regulations, call attention to conditions that are potentially hazardous to traffic operations, show route designations, destinations, directions, distances, services, points of interest, and other geographical, recreational, specific service (LOGO), or cultural information. Drivers proceeding through a work zone need the same, if not better route guidance as normally installed on a roadway without construction.
2. When permanent regulatory or warning signs conflict with work zone conditions, remove or cover the permanent signs until the permanent sign message matches the roadway condition. For details for covering large guide signs see the TS-CD standard.
3. When existing permanent signs are moved and relocated due to construction purposes, they shall be visible to motorists at all times.
4. If existing signs are to be relocated on their original supports, they shall be installed on crashworthy bases as shown on the SMD Standard sheets. The signs shall meet the required mounting heights shown on the BC Sheets or the SMD Standards. This work should be paid for under the appropriate pay item for relocating existing signs.
5. If permanent signs are to be removed and relocated using temporary supports, the Contractor shall use crashworthy supports as shown on the BC standard sheets, TLRS standard sheets or the CWZTCD list. The signs shall meet the required mounting heights shown on the BC, or the SMD standard sheets during construction. This work should be paid for under the appropriate pay item for relocating existing signs.
6. Any sign or traffic control device that is struck or damaged by the Contractor or his/her construction equipment shall be replaced as soon as possible by the Contractor to ensure proper guidance for the motorists. This will be subsidiary to Item 502.

GENERAL NOTES FOR WORK ZONE SIGNS

1. Contractor shall install and maintain signs in a straight and plumb condition and/or as directed by the Engineer.
2. Wooden sign posts shall be painted white.
3. Barricades shall NOT be used as sign supports.
4. All signs shall be installed in accordance with the plans or as directed by the Engineer. Signs shall be used to regulate, warn, and guide the traveling public safely through the work zone.
5. The Contractor may furnish either the sign design shown in the plans or in the "Standard Highway Sign Designs for Texas" (SHSD). The Engineer/Inspector may require the Contractor to furnish other work zone signs that are shown in the TMUTCD but may have been omitted from the plans. Any variation in the plans shall be documented by written agreement between the Engineer and the Contractor's Responsible Person. All changes must be documented in writing before being implemented. This can include documenting the changes in the Inspector's TxDOT diary and having both the Inspector and Contractor initial and date the agreed upon changes.
6. The Contractor shall furnish sign supports listed in the "Compliant Work Zone Traffic Control Device List" (CWZTCD) for small roadside signs. Supports for temporary large roadside signs shall meet the requirements detailed on the Temporary Large Roadside Signs (TLRS) standard sheets. The Contractor shall install the sign support in accordance with the manufacturer's recommendations. If there is a question regarding installation procedures, the Contractor shall furnish the Engineer a copy of the manufacturer's installation recommendations so the Engineer can verify the correct procedures are being followed.
7. The Contractor is responsible for installing signs on approved supports and replacing signs with damaged or cracked substrates and/or damaged or marred reflective sheeting as directed by the Engineer/Inspector.
8. Identification markings may be shown only on the back of the sign substrate. The maximum height of letters and/or company logos used for identification shall be 1 inch.
9. The Contractor shall replace damaged wood posts. New or damaged wood sign posts shall not be spliced.

DURATION OF WORK (as defined by the "Texas Manual on Uniform Traffic Control Devices" Part 6)

1. The types of sign supports, sign mounting height, the size of signs, and the type of sign substrates can vary based on the type of work being performed. The Engineer is responsible for selecting the appropriate size sign for the type of work being performed. The Contractor is responsible for ensuring the sign support, sign mounting height and substrate meets manufacturer's recommendations in regard to crashworthiness and duration of work requirements.
   a. Long-term stationary - work that occupies a location more than 3 days.
   b. Intermediate-term stationary - work that occupies a location more than one daylight period up to 3 days, or nighttime work lasting more than one hour.
   c. Short-term stationary - daytime work that occupies a location for more than 1 hour in a single daylight period.
   d. Short, duration - work that occupies a location up to 1 hour.
   e. Mobile - work that moves continuously or intermittently (stopping for up to approximately 15 minutes.)

SIGN MOUNTING HEIGHT

1. The bottom of Long-term/Intermediate-term signs shall be at least 7 feet, but not more than 9 feet, above the paved surface, except as shown for supplemental plaques mounted below other signs.
2. The bottom of Short-term/Short Duration signs shall be a minimum of 1 foot above the pavement surface but no more than 2 feet above the ground.
3. Long-term/Intermediate-term Signs may be used in lieu of Short-term/Short Duration signing.
4. Short-term/Short Duration signs shall be used only during daylight and shall be removed at the end of the workday or raised to appropriate Long-term/Intermediate sign height.
5. Regulatory signs shall be mounted at least 7 feet, but not more than 9 feet, above the paved surface regardless of work duration.

SIZE OF SIGNS

1. The Contractor shall furnish the sign sizes shown on BC (2) unless otherwise shown in the plans or as directed by the Engineer.

SIGN SUBSTRATES

1. The Contractor shall ensure the sign substrate is installed in accordance with the manufacturer's recommendations for the type of sign support that is being used. The CWZTCD lists each substrate that can be used on the different types and models of sign supports.
2. "Mesh" type materials are NOT an approved sign substrate, regardless of the tightness of the weave.
3. All wooden individual sign panels fabricated from 2 or more pieces shall have one or more plywood cleat, 1/2" thick by 6" wide, fastened to the back of the sign and extending fully across the sign. The cleat shall be attached to the back of the sign using wood screws that do not penetrate the face of the sign panel. The screws shall be placed on both sides of the splice and spaced at 6" centers. The Engineer may approve other methods of splicing the sign face.

REFLECTIVE SHEETING

1. All signs shall be retroreflective and constructed of sheeting meeting the color and retro-reflectivity requirements of DMS-8300 for rigid signs or DMS-8310 for roll-up signs. The web address for DMS specifications is shown on BC(1).
2. White sheeting, meeting the requirements of DMS-8300 Type A, shall be used for signs with a white background.
3. Orange sheeting, meeting the requirements of DMS-8300 Type B_{FL} or Type C_{FL}, shall be used for rigid signs with orange backgrounds.

SIGN LETTERS

1. All sign letters and numbers shall be clear, and open rounded type uppercase alphabet letters as approved by the Federal Highway Administration (FHWA) and as published in the "Standard Highway Sign Design for Texas" manual. Signs, letters and numbers shall be of first class workmanship in accordance with Department Standards and Specifications.

REMOVING OR COVERING

1. When sign messages may be confusing or do not apply, the signs shall be removed or completely covered.
2. Long-term stationary or intermediate stationary signs installed on square metal tubing may be turned away from traffic 90 degrees when the sign message is not applicable. This technique may not be used for signs installed in the median of divided highways or near any intersections where the sign may be seen from approaching traffic.
3. Signs installed on wooden skids shall not be turned at 90 degree angles to the roadway. These signs should be removed or completely covered when not required.
4. When signs are covered, the material used shall be opaque, such as heavy mil black plastic, or other materials which will cover the entire sign face and maintain their opaque properties under automobile headlights at night, without damaging the sign sheeting.
5. Burlap shall NOT be used to cover signs.
6. Duct tape or other adhesive material shall NOT be affixed to a sign face.
7. Signs and anchor stubs shall be removed and holes backfilled upon completion of work.

SIGN SUPPORT WEIGHTS

1. Where sign supports require the use of weights to keep from turning over, the use of sandbags with dry, cohesionless sand should be used.
2. The sandbags will be tied shut to keep the sand from spilling and to maintain a constant weight.
3. Rock, concrete, iron, steel or other solid objects shall not be permitted for use as sign support weights.
4. Sandbags should weigh a minimum of 35 lbs and a maximum of 50 lbs.
5. Sandbags shall be made of a durable material that tears upon vehicular impact. Rubber (such as tire inner tubes) shall NOT be used.
6. Rubber ballasts designed for channelizing devices should not be used for ballast on portable sign supports. Sign supports designed and manufactured with rubber bases may be used when shown on the CWZTCD list.
7. Sandbags shall only be placed along or laid over the base supports of the traffic control device and shall not be suspended above ground level or hung with rope, wire, chains or other fasteners. Sandbags shall be placed along the length of the skids to weigh down the sign support.
8. Sandbags shall NOT be placed under the skid and shall not be used to level sign supports placed on slopes.

FLAGS ON SIGNS

1. Flags may be used to draw attention to warning signs. When used, the flag shall be 16 inches square or larger and shall be orange or fluorescent red-orange in color. Flags shall not be allowed to cover any portion of the sign face.

Texas Department of Transportation — Traffic Safety Division Standard

BARRICADE AND CONSTRUCTION TEMPORARY SIGN NOTES

BC(4)-21

FILE: bc-21.dgn	DN: TxDOT	CK: TxDOT	DW: TxDOT	CK: TxDOT
© TxDOT November 2002	CONT	SECT	JOB	HIGHWAY
REVISIONS	0231	03	156	IH-14
9-07 8-14	DIST		COUNTY	SHEET NO.
7-13 5-21	WACO		BELL	11

DATE: 7/11/2025 4:30:18 PM
FILE: c:\txdot\pw_online\txdot3\patrick.jalufka\d0807940\bc-21.dgn

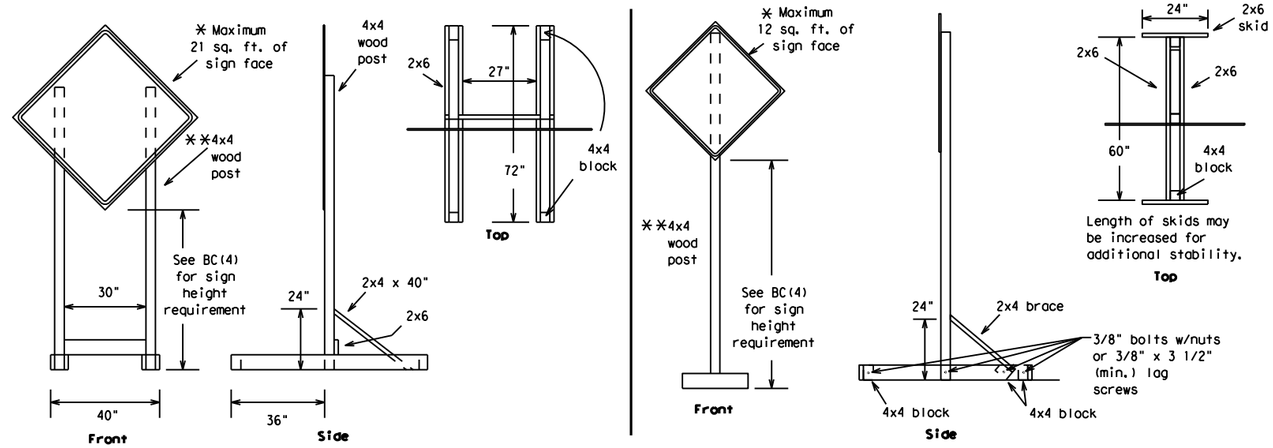

SKID MOUNTED WOOD SIGN SUPPORTS

* LONG/INTERMEDIATE TERM STATIONARY - PORTABLE SKID MOUNTED SIGN SUPPORTS

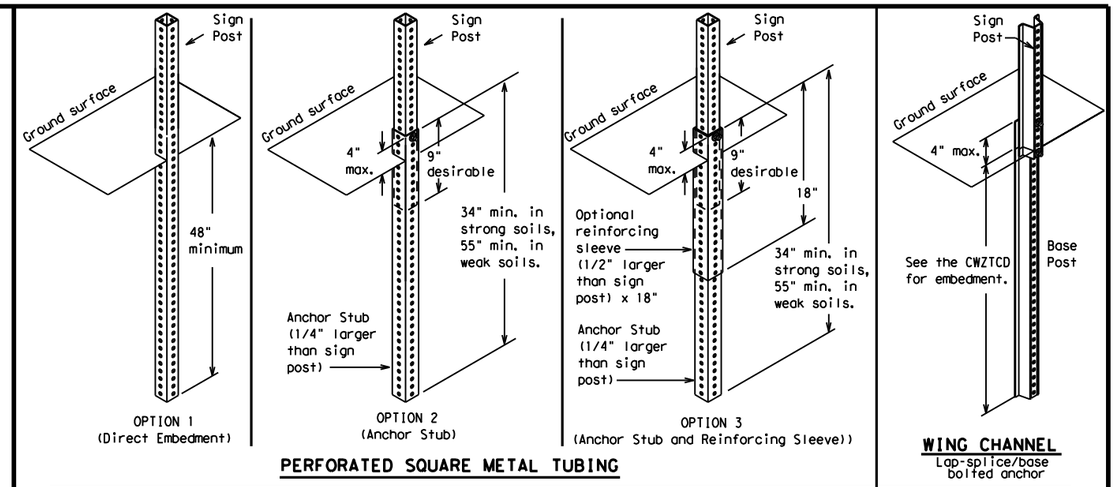

PERFORATED SQUARE METAL TUBING

WING CHANNEL
Lap-splice/base bolted anchor

GROUND MOUNTED SIGN SUPPORTS

Refer to the CWZTCD and the manufacturer's installation procedure for each type sign support.
The maximum sign square footage shall adhere to the manufacturer's recommendation.
Two post installations can be used for larger signs.

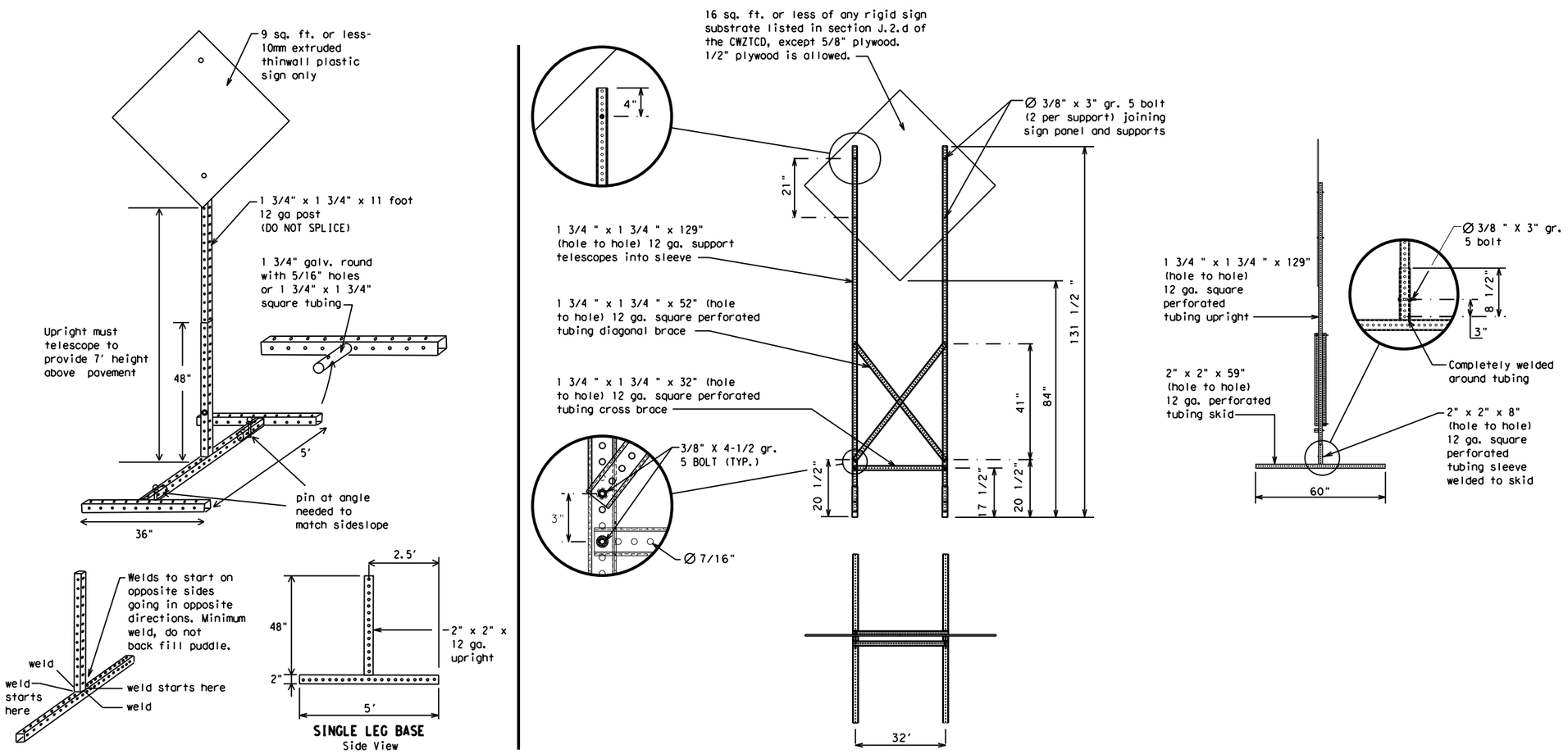

SKID MOUNTED PERFORATED SQUARE STEEL TUBING SIGN SUPPORTS

* LONG/INTERMEDIATE TERM STATIONARY - PORTABLE SKID MOUNTED SIGN SUPPORTS

WEDGE ANCHORS

Both steel and plastic Wedge Anchor Systems as shown on the SMD Standard Sheets may be used as temporary sign supports for signs up to 10 square feet of sign face. They may be set in concrete or in sturdy soils if approved by the Engineer. (See web address for "Traffic Engineering Standard Sheets" on BC(1)).

OTHER DESIGNS

MORE DETAILS OF APPROVED LONG/INTERMEDIATE AND SHORT TERM SUPPORTS CAN BE FOUND ON THE CWZTCD LIST. SEE BC(1) FOR WEBSITE LOCATION.

GENERAL NOTES

1. Nails may be used in the assembly of wooden sign supports, but 3/8" bolts with nuts or 3/8" x 3 1/2" lag screws must be used on every joint for final connection.
2. No more than 2 sign posts shall be placed within a 7 ft. circle, except for specific materials noted on the CWZTCD List.
3. When project is completed, all sign supports and foundations shall be removed from the project site. This will be considered subsidiary to Item 502.

* See BC(4) for definition of "Work Duration."

** Wood sign posts MUST be one piece. Splicing will NOT be allowed. Posts shall be painted white.

☐ See the CWZTCD for the type of sign substrate that can be used for each approved sign support.

SHEET 5 OF 12

Texas Department of Transportation — Traffic Safety Division Standard

BARRICADE AND CONSTRUCTION TYPICAL SIGN SUPPORT

BC(5)-21

FILE: bc-21.dgn	DN: TxDOT	CK: TxDOT	DW: TxDOT	CK: TxDOT
© TxDOT November 2002	CONT	SECT	JOB	HIGHWAY
REVISIONS	0231	03	156	IH-14
9-07 8-14	DIST		COUNTY	SHEET NO.
7-13 5-21	WACO		BELL	12

DISCLAIMER:
The use of this standard is governed by the "Texas Engineering Practice Act". No warranty of any kind is made by TxDOT for any purpose whatsoever. TxDOT assumes no responsibility for the conversion of this standard to other formats or for incorrect results or damages resulting from its use.

DATE: 7/11/2025 4:30:19 PM
FILE: c:\txdot\pw_online\txdot3\patrick.jalufka\d0807940\bc-21.dgn

WHEN NOT IN USE, REMOVE THE PCMS FROM THE RIGHT-OF-WAY OR PLACE THE PCMS BEHIND BARRIER OR GUARDRAIL WITH SIGN PANEL TURNED PARALLEL TO TRAFFIC

PORTABLE CHANGEABLE MESSAGE SIGNS

1. The Engineer/Inspector shall approve all messages used on portable changeable message signs (PCMS).
2. Messages on PCMS should contain no more than 8 words (about four to eight characters per word), not including simple words such as "TO," "FOR," "AT," etc.
3. Messages should consist of a single phase, or two phases that alternate. Three-phase messages are not allowed. Each phase of the message should convey a single thought, and must be understood by itself.
4. Use the word "EXIT" to refer to an exit ramp on a freeway; i.e., "EXIT CLOSED." Do not use the term "RAMP."
5. Always use the route or interstate designation (IH, US, SH, FM) along with the number when referring to a roadway.
6. When in use, the bottom of a stationary PCMS message panel should be a minimum 7 feet above the roadway, where possible.
7. The message term "WEEKEND" should be used only if the work is to start on Saturday morning and end by Sunday evening at midnight. Actual days and hours of work should be displayed on the PCMS if work is to begin on Friday evening and/or continue into Monday morning.
8. The Engineer/Inspector may select one of two options which are available for displaying a two-phase message on a PCMS. Each phase may be displayed for either four seconds each or for three seconds each.
9. Do not "flash" messages or words included in a message. The message should be steady burn or continuous while displayed.
10. Do not present redundant information on a two-phase message; i.e., keeping two lines of the message the same and changing the third line.
11. Do not use the word "Danger" in message.
12. Do not display the message "LANES SHIFT LEFT" or "LANES SHIFT RIGHT" on a PCMS. Drivers do not understand the message.
13. Do not display messages that scroll horizontally or vertically across the face of the sign.
14. The following table lists abbreviated words and two-word phrases that are acceptable for use on a PCMS. Both words in a phrase must be displayed together. Words or phrases not on this list should not be abbreviated, unless shown in the TMUTCD.
15. PCMS character height should be at least 18 inches for trailer mounted units. They should be visible from at least 1/2 (.5) mile and the text should be legible from at least 600 feet at night and 800 feet in daylight. Truck mounted units must have a character height of 10 inches and must be legible from at least 400 feet.
16. Each line of text should be centered on the message board rather than left or right justified.
17. If disabled, the PCMS should default to an illegible display that will not alarm motorists and will only be used to alert workers that the PCMS has malfunctioned. A pattern such as a series of horizontal solid bars is appropriate.

WORD OR PHRASE	ABBREVIATION
Access Road	ACCS RD
Alternate	ALT
Avenue	AVE
Best Route	BEST RTE
Boulevard	BLVD
Bridge	BRDG
Cannot	CANT
Center	CTR
Construction Ahead	CONST AHD
CROSSING	XING
Detour Route	DETOUR RTE
Do Not	DONT
East	E
Eastbound	(route) E
Emergency	EMER
Emergency Vehicle	EMER VEH
Entrance, Enter	ENT
Express Lane	EXP LN
Expressway	EXPWY
XXXX Feet	XXXX FT
Fog Ahead	FOG AHD
Freeway	FRWY, FWY
Freeway Blocked	FWY BLKD
Friday	FRI
Hazardous Driving	HAZ DRIVING
Hazardous Material	HAZMAT
High-Occupancy	HOV
Vehicle Highway	HWY
Hour(s)	HR, HRS
Information	INFO
It Is	ITS
Junction	JCT
Left	LFT
Left Lane	LFT LN
Lane Closed	LN CLOSED
Lower Level	LWR LEVEL
Maintenance	MAINT

WORD OR PHRASE	ABBREVIATION
Major	MAJ
Miles	MI
Miles Per Hour	MPH
Minor	MNR
Monday	MON
Normal	NORM
North	N
Northbound	(route) N
Parking	PKING
Road	RD
Right Lane	RT LN
Saturday	SAT
Service Road	SERV RD
Shoulder	SHLDR
Slippery	SLIP
South	S
Southbound	(route) S
Speed	SPD
Street	ST
Sunday	SUN
Telephone	PHONE
Temporary	TEMP
Thursday	THURS
To Downtown	TO DWNTN
Traffic	TRAF
Travelers	TRVLRS
Tuesday	TUES
Time Minutes	TIME MIN
Upper Level	UPR LEVEL
Vehicles (s)	VEH, VEHS
Warning	WARN
Wednesday	WED
Weight Limit	WT LIMIT
West	W
Westbound	(route) W
Wet Pavement	WET PVMT
Will Not	WONT

Roadway designation # IH-number, US-number, SH-number, FM-number

RECOMMENDED PHASES AND FORMATS FOR PCMS MESSAGES DURING ROADWORK ACTIVITIES

(The Engineer may approve other messages not specifically covered here.)

Phase 1: Condition Lists

Road/Lane/Ramp Closure List

FREEWAY CLOSED X MILE	FRONTAGE ROAD CLOSED
ROAD CLOSED AT SH XXX	SHOULDER CLOSED XXX FT
ROAD CLSD AT FM XXXX	RIGHT LN CLOSED XXX FT
RIGHT X LANES CLOSED	RIGHT X LANES OPEN
CENTER LANE CLOSED	DAYTIME LANE CLOSURES
NIGHT LANE CLOSURES	I-XX SOUTH EXIT CLOSED
VARIOUS LANES CLOSED	EXIT XXX CLOSED X MILE
EXIT CLOSED	RIGHT LN TO BE CLOSED
MALL DRIVEWAY CLOSED	X LANES CLOSED TUE - FRI
XXXXXXXX BLVD CLOSED	

Other Condition List

ROADWORK XXX FT	ROAD REPAIRS XXXX FT
FLAGGER XXXX FT	LANE NARROWS XXXX FT
RIGHT LN NARROWS XXXX FT	TWO-WAY TRAFFIC XX MILE
MERGING TRAFFIC XXXX FT	CONST TRAFFIC XXX FT
LOOSE GRAVEL XXXX FT	UNEVEN LANES XXXX FT
DETOUR X MILE	ROUGH ROAD XXXX FT
ROADWORK PAST SH XXXX	ROADWORK NEXT FRI-SUN
BUMP XXXX FT	US XXX EXIT X MILES
TRAFFIC SIGNAL XXXX FT	LANES SHIFT *

* LANES SHIFT in Phase 1 must be used with STAY IN LANE in Phase 2.

Phase 2: Possible Component Lists

Action to Take/Effect on Travel List

MERGE RIGHT	FORM X LINES RIGHT
DETOUR NEXT X EXITS	USE XXXXX RD EXIT
USE EXIT XXX	USE EXIT I-XX NORTH
STAY ON US XXX SOUTH	USE I-XX E TO I-XX N
TRUCKS USE US XXX N	WATCH FOR TRUCKS
WATCH FOR TRUCKS	EXPECT DELAYS
EXPECT DELAYS	PREPARE TO STOP
REDUCE SPEED XXX FT	END SHOULDER USE
USE OTHER ROUTES	WATCH FOR WORKERS
STAY IN LANE *	

Location List

AT FM XXXX
BEFORE RAILROAD CROSSING
NEXT X MILES
PAST US XXX EXIT
XXXXXXX TO XXXXXXX
US XXX TO FM XXXX

Warning List

SPEED LIMIT XX MPH
MAXIMUM SPEED XX MPH
MINIMUM SPEED XX MPH
ADVISORY SPEED XX MPH
RIGHT LANE EXIT
USE CAUTION
DRIVE SAFELY
DRIVE WITH CARE

** Advance Notice List

TUE-FRI XX AM- X PM
APR XX- XX X PM-X AM
BEGINS MONDAY
BEGINS MAY XX
MAY X-X XX PM - XX AM
NEXT FRI-SUN
XX AM TO XX PM
NEXT TUE AUG XX
TONIGHT XX PM- XX AM

** See Application Guidelines Note 6.

APPLICATION GUIDELINES

1. Only 1 or 2 phases are to be used on a PCMS.
2. The 1st phase (or both) should be selected from the "Road/Lane/Ramp Closure List" and the "Other Condition List".
3. A 2nd phase can be selected from the "Action to Take/Effect on Travel, Location, General Warning, or Advance Notice Phase Lists".
4. A Location Phase is necessary only if a distance or location is not included in the first phase selected.
5. If two PCMS are used in sequence, they must be separated by a minimum of 1000 ft. Each PCMS shall be limited to two phases, and should be understandable by themselves.
6. For advance notice, when the current date is within seven days of the actual work date, calendar days should be replaced with days of the week. Advance notification should typically be for no more than one week prior to the work.

WORDING ALTERNATIVES

1. The words RIGHT, LEFT and ALL can be interchanged as appropriate.
2. Roadway designations IH, US, SH, FM and LP can be interchanged as appropriate.
3. EAST, WEST, NORTH and SOUTH (or abbreviations E, W, N and S) can be interchanged as appropriate.
4. Highway names and numbers replaced as appropriate.
5. ROAD, HIGHWAY and FREEWAY can be interchanged as needed.
6. AHEAD may be used instead of distances if necessary.
7. FT and MI, MILE and MILES interchanged as appropriate.
8. AT, BEFORE and PAST interchanged as needed.
9. Distances or AHEAD can be eliminated from the message if a location phase is used.

PCMS SIGNS WITHIN THE R.O.W. SHALL BE BEHIND GUARDRAIL OR CONCRETE BARRIER OR SHALL HAVE A MINIMUM OF FOUR (4) PLASTIC DRUMS PLACED PERPENDICULAR TO TRAFFIC ON THE UPSTREAM SIDE OF THE PCMS, WHEN EXPOSED TO ONE DIRECTION OF TRAFFIC. WHEN EXPOSED TO TWO WAY TRAFFIC, THE FOUR DRUMS SHOULD BE PLACED WITH ONE DRUM AT EACH OF THE FOUR CORNERS OF THE UNIT.

FULL MATRIX PCMS SIGNS

1. When Full Matrix PCMS signs are used, the character height and legibility/visibility requirements shall be maintained as listed in Note 15 under "PORTABLE CHANGEABLE MESSAGE SIGNS" above.
2. When symbol signs, such as the "Flagger Symbol"(CW20-7) are represented graphically on the Full Matrix PCMS sign and, with the approval of the Engineer, it shall maintain the legibility/visibility requirement listed above.
3. When symbol signs are represented graphically on the Full Matrix PCMS, they shall only supplement the use of the static sign represented, and shall not substitute for, or replace that sign.
4. A full matrix PCMS may be used to simulate a flashing arrow board provided it meets the visibility, flash rate and dimming requirements on BC(7), for the same size arrow.

Texas Department of Transportation — Traffic Safety Division Standard

BARRICADE AND CONSTRUCTION PORTABLE CHANGEABLE MESSAGE SIGN (PCMS)

BC(6)-21

FILE: bc-21.dgn	DN: TxDOT	CK: TxDOT	DW: TxDOT	CK: TxDOT
© TxDOT November 2002	CONT	SECT	JOB	HIGHWAY
REVISIONS	0231	03	156	IH-14
9-07 8-14	DIST		COUNTY	SHEET NO.
7-13 5-21	WACO		BELL	13

DISCLAIMER:
The use of this standard is governed by the "Texas Engineering Practice Act". No warranty of any kind is made by TxDOT for any purpose whatsoever. TxDOT assumes no responsibility for the conversion of this standard to other formats or for incorrect results or damages resulting from its use.

DATE: 7/11/2025 4:30:19 PM
FILE: c:\txdot\pw_online\txdot3\patrick.jalufka\d0807940\bc-21.dgn

1. Barrier Reflectors shall be pre-qualified, and conform to the color and reflectivity requirements of DMS-8600. A list of prequalified Barrier Reflectors can be found at the Material Producer List web address shown on BC(1).
2. Color of Barrier Reflectors shall be as specified in the TMUTCD. The cost of the reflectors shall be considered subsidiary to Item 512.

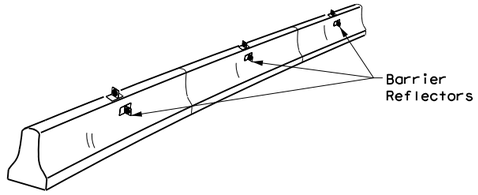

CONCRETE TRAFFIC BARRIER (CTB)

3. Where traffic is on one side of the CTB, two (2) Barrier Reflectors shall be mounted in approximately the midsection of each section of CTB. An alternate mounting location is uniformly spaced at one end of each CTB. This will allow for attachment of a barrier grapple without damaging the reflector. The Barrier Reflector mounted on the side of the CTB shall be located directly below the reflector mounted on top of the barrier, as shown in the detail above.
4. Where CTB separates two-way traffic, three barrier reflectors shall be mounted on each section of CTB. The reflector unit on top shall have two yellow reflective faces (Bi-Directional)while the reflectors on each side of the barrier shall have one yellow reflective face, as shown in the detail above.
5. When CTB separates traffic traveling in the same direction, no barrier reflectors will be required on top of the CTB.
6. Barrier Reflector units shall be yellow or white in color to match the edgeline being supplemented.
7. Maximum spacing of Barrier Reflectors is forty (40) feet.
8. Pavement markers or temporary flexible-reflective roadway marker tabs shall NOT be used as CTB delineation.
9. Attachment of Barrier Reflectors to CTB shall be per manufacturer's recommendations.
10. Missing or damaged Barrier Reflectors shall be replaced as directed by the Engineer.
11. Single slope barriers shall be delineated as shown on the above detail.

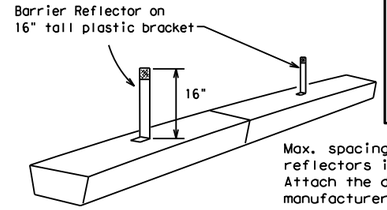

Max. spacing of barrier reflectors is 20 feet. Attach the delineators as per manufacturer's recommendations.

LOW PROFILE CONCRETE BARRIER (LPCB)

LOW PROFILE CONCRETE BARRIER (LPCB) USED IN WORK ZONES

LPCB is approved for use in work zone locations, where the posted speed is 45mph, or less. See Roadway Standard Sheet LPCB.

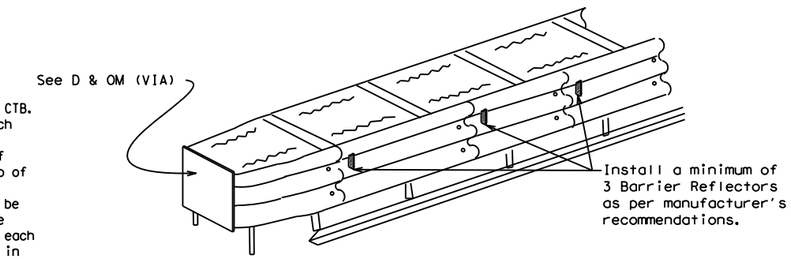

DELINEATION OF END TREATMENTS

END TREATMENTS FOR CTB'S USED IN WORK ZONES

End treatments used on CTB's in work zones shall meet the apppropriate crashworthy standards as defined in the Manual for Assessing Safety Hardware (MASH). Refer to the CWZTCD List for approved end treatments and manufacturers.

BARRIER REFLECTORS FOR CONCRETE TRAFFIC BARRIER AND ATTENUATORS

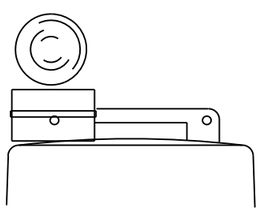

Type C Warning Light or approved substitute mounted on a drum adjacent to the travel way.

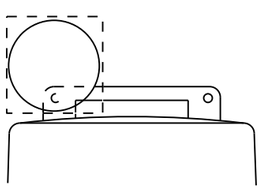

Warning reflector may be round or square.Must have a yellow reflective surface area of at least 30 square inches

WARNING LIGHTS

1. Warning lights shall meet the requirements of the TMUTCD.
2. Warning lights shall NOT be installed on barricades.
3. Type A-Low Intensity Flashing Warning Lights are commonly used with drums. They are intended to warn of or mark a potentially hazardous area. Their use shall be as indicated on this sheet and/or other sheets of the plans by the designation "FL". The Type A Warning Lights shall not be used with signs manufactured with Type B_{FL} or C_{FL} Sheeting meeting the requirements of Departmental Material Specification DMS-8300.
4. Type-C and Type D 360 degree Steady Burn Lights are intended to be used in a series for delineation to supplement other traffic control devices. Their use shall be as indicated on this sheet and/or other sheets of the plans by the designation "SB".
5. The Engineer/Inspector or the plans shall specify the location and type of warning lights to be installed on the traffic control devices.
6. When required by the Engineer, the Contractor shall furnish a copy of the warning lights certification. The warning light manufacturer will certify the warning lights meet the requirements of the latest ITE Purchase Specifications for Flashing and Steady-Burn Warning Lights.
7. When used to delineate curves, Type-C and Type D Steady Burn Lights should only be placed on the outside of the curve, not the inside.
8. The location of warning lights and warning reflectors on drums shall be as shown elsewhere in the plans.

WARNING LIGHTS MOUNTED ON PLASTIC DRUMS

1. Type A flashing warning lights are intended to warn drivers that they are approaching or are in a potentially hazardous area.
2. Type A random flashing warning lights are not intended for delineation and shall not be used in a series.
3. A series of sequential flashing warning lights placed on channelizing devices to form a merging taper may be used for delineation. If used, the successive flashing of the sequential warning lights should occur from the beginning of the taper to the end of the merging taper in order to identify the desired vehicle path. The rate of flashing for each light shall be 65 flashes per minute, plus or minus 10 flashes.
4. Type C and D steady-burn warning lights are intended to be used in a series to delineate the edge of the travel lane on detours, on lane changes, on lane closures, and on other similar conditions.
5. Type A, Type C and Type D warning lights shall be installed at locations as detailed on other sheets in the plans.
6. Warning lights shall not be installed on a drum that has a sign, chevron or vertical panel.
7. The maximum spacing for warning lights on drums should be identical to the channelizing device spacing.

WARNING REFLECTORS MOUNTED ON PLASTIC DRUMS AS A SUBSTITUTE FOR TYPE C (STEADY BURN) WARNING LIGHTS

1. A warning reflector or approved substitute may be mounted on a plastic drum as a substitute for a Type C, steady burn warning light at the discretion of the Contractor unless otherwise noted in the plans.
2. The warning reflector shall be yellow in color and shall be manufactured using a sign substrate approved for use with plastic drums listed on the CWZTCD.
3. The warning reflector shall have a minimum retroreflective surface area (one-side) of 30 square inches.
4. Round reflectors shall be fully reflectorized, including the area where attached to the drum.
5. Square substrates must have a minimum of 30 square inches of reflectorized sheeting. They do not have to be reflectorized where it attaches to the drum.
6. The side of the warning reflector facing approaching traffic shall have sheeting meeting the color and retroreflectivity requirements for DMS 8300-Type B or Type C.
7. When used near two-way traffic, both sides of the warning reflector shall be reflectorized.
8. The warning reflector should be mounted on the side of the handle nearest approaching traffic.
9. The maximum spacing for warning reflectors should be identical to the channelizing device spacing requirements.

Arrow Boards may be located behind channelizing devices in place for a shoulder taper or merging taper, otherwise they shall be delineated with four (4) channelizing devices placed perpendicular to traffic on the upstream side of traffic.

1. The Flashing Arrow Board should be used for all lane closures on multi-lane roadways, or slow moving maintenance or construction activities on the travel lanes.
2. Flashing Arrow Boards should not be used on two-lane, two-way roadways, detours, diversions or work on shoulders unless the "CAUTION" display (see detail below) is used.
3. The Engineer/Inspector shall choose all appropriate signs, barricades and/or other traffic control devices that should be used in conjunction with the Flashing Arrow Board.
4. The Flashing Arrow Board should be able to display the following symbols:

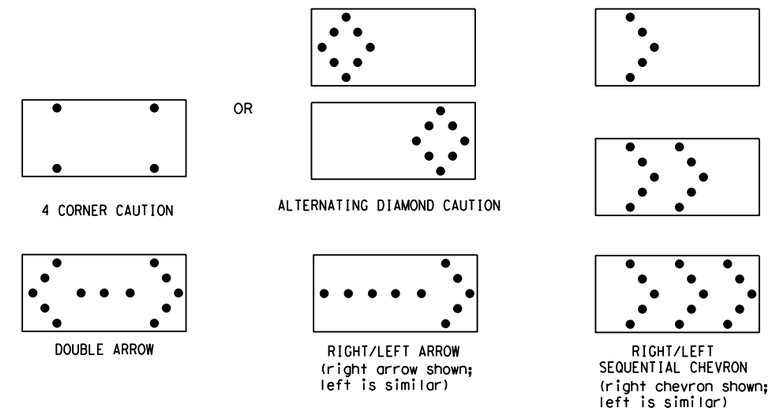

5. The "CAUTION" display consists of four corner lamps flashing simultaneously, or the Alternating Diamond Caution mode as shown.
6. The straight line caution display is NOT ALLOWED.
7. The Flashing Arrow Board shall be capable of minimum 50 percent dimming from rated lamp voltage. The flashing rate of the lamps shall not be less than 25 nor more than 40 flashes per minute.
8. Minimum lamp "on time" shall be approximately 50 percent for the flashing arrow and equal intervals of 25 percent for each sequential phase of the flashing chevron.
9. The sequential arrow display is NOT ALLOWED.
10. The flashing arrow display is the TxDOT standard; however, the sequential chevron display may be used during daylight operations.
11. The Flashing Arrow Board shall be mounted on a vehicle, trailer or other suitable support.
12. A Flashing Arrow Board SHALL NOT BE USED to laterally shift traffic.
13. A full matrix PCMS may be used to simulate a Flashing Arrow Board provided it meets visibility, flash rate and dimming requirements on this sheet for the same size arrow.
14. Minimum mounting height of trailer mounted Arrow Boards should be 7 feet from roadway to bottom of panel.

REQUIREMENTS

TYPE	MINIMUM SIZE	MINIMUM NUMBER OF PANEL LAMPS	MINIMUM VISIBILITY DISTANCE
B	30 x 60	13	3/4 mile
C	48 x 96	15	1 mile

ATTENTION

Flashing Arrow Boards shall be equipped with automatic dimming devices.

WHEN NOT IN USE, REMOVE THE ARROW BOARD FROM THE RIGHT-OF-WAY OR PLACE THE ARROW BOARD BEHIND CONCRETE TRAFFIC BARRIER OR GUARDRAIL.

FLASHING ARROW BOARDS

SHEET 7 OF 12

TRUCK-MOUNTED ATTENUATORS

1. Truck-mounted attenuators (TMA) used on TxDOT facilities must meet the requirements outlined in the Manual for Assessing Safety Hardware (MASH).
2. Refer to the CWZTCD for the requirements of Level 2 or Level 3 TMAs.
3. Refer to the CWZTCD for a list of approved TMAs.
4. TMAs are required on freeways unless otherwise noted in the plans.
5. A TMA should be used anytime that it can be positioned 30 to 100 feet in advance of the area of crew exposure without adversely affecting the work performance.
6. The only reason a TMA should not be required is when a work area is spread down the roadway and the work crew is an extended distance from the TMA.

Texas Department of Transportation

Traffic Safety Division Standard

BARRICADE AND CONSTRUCTION ARROW PANEL, REFLECTORS, WARNING LIGHTS & ATTENUATOR

BC(7)-21

FILE: bc-21.dgn	DN: TxDOT	CK: TxDOT	DW: TxDOT	CK: TxDOT
© TxDOT November 2002	CONT	SECT	JOB	HIGHWAY
REVISIONS	0231	03	156	IH-14
9-07 8-14	DIST		COUNTY	SHEET NO.
7-13 5-21	WACO		BELL	14

101

DISCLAIMER:
The use of this standard is governed by the "Texas Engineering Practice Act". No warranty of any kind is made by TxDOT for any purpose whatsoever. TxDOT assumes no responsibility for the conversion of this standard to other formats or for incorrect results or damages resulting from its use.

DATE: 7/11/2025 4:30:19 PM
FILE: c:\txdot\pw_online\txdot3\patrick.jalufka\d0807940\bc-21.dgn

DISCLAIMER:
The use of this standard is governed by the "Texas Engineering Practice Act". No warranty of any kind is made by TxDOT for any purpose whatsoever. TxDOT assumes no responsibility for the conversion of this standard to other formats or for incorrect results or damages resulting from its use.

DATE: 7/11/2025 4:30:19 PM
FILE: c:\txdot\pw_online\txdot3\patrick.jalufka\d0807940\bc-21.dgn

GENERAL NOTES

1. For long term stationary work zones on freeways, drums shall be used as the primary channelizing device.
2. For intermediate term stationary work zones on freeways, drums should be used as the primary channelizing device but may be replaced in tangent sections by vertical panels, or 42" two-piece cones. In tangent sections, one-piece cones may be used with the approval of the Engineer but only if personnel are present on the project at all times to maintain the cones in proper position and location.
3. For short term stationary work zones on freeways, drums are the preferred channelizing device but may be replaced in tapers, transitions and tangent sections by vertical panels, two-piece cones or one-piece cones as approved by the Engineer.
4. Drums and all related items shall comply with the requirements of the current version of the "Texas Manual on Uniform Traffic Control Devices" (TMUTCD) and the "Compliant Work Zone Traffic Control Devices List" (CWZTCD).
5. Drums, bases, and related materials shall exhibit good workmanship and shall be free from objectionable marks or defects that would adversely affect their appearance or serviceability.
6. The Contractor shall have a maximum of 24 hours to replace any plastic drums identified for replacement by the Engineer/Inspector. The replacement device must be an approved device.

GENERAL DESIGN REQUIREMENTS

Pre-qualified plastic drums shall meet the following requirements:

1. Plastic drums shall be a two-piece design; the "body" of the drum shall be the top portion and the "base" shall be the bottom.
2. The body and base shall lock together in such a manner that the body separates from the base when impacted by a vehicle traveling at a speed of 20 MPH or greater but prevents accidental separation due to normal handling and/or air turbulence created by passing vehicles.
3. Plastic drums shall be constructed of lightweight flexible, and deformable materials. The Contractor shall NOT use metal drums or single piece plastic drums as channelization devices or sign supports.
4. Drums shall present a profile that is a minimum of 18 inches in width at the 36 inch height when viewed from any direction. The height of drum unit (body installed on base) shall be a minimum of 36 inches and a maximum of 42 inches.
5. The top of the drum shall have a built-in handle for easy pickup and shall be designed to drain water and not collect debris. The handle shall have a minimum of two widely spaced 9/16 inch diameter holes to allow attachment of a warning light, warning reflector unit or approved compliant sign.
6. The exterior of the drum body shall have a minimum of four alternating orange and white retroreflective circumferential stripes not less than 4 inches nor greater than 8 inches in width. Any non-reflectorized space between any two adjacent stripes shall not exceed 2 inches in width.
7. Bases shall have a maximum width of 36 inches, a maximum height of 4 inches, and a minimum of two footholds of sufficient size to allow base to be held down while separating the drum body from the base.
8. Plastic drums shall be constructed of ultra-violet stabilized, orange, high-density polyethylene (HDPE) or other approved material.
9. Drum body shall have a maximum unballasted weight of 11 lbs.
10. Drum and base shall be marked with manufacturer's name and model number.

RETROREFLECTIVE SHEETING

1. The stripes used on drums shall be constructed of sheeting meeting the color and retroreflectivity requirements of Departmental Materials Specification DMS-8300, "Sign Face Materials," Type A or Type B reflective sheeting shall be supplied unless otherwise specified in the plans.
2. The sheeting shall be suitable for use on and shall adhere to the drum surface such that, upon vehicular impact, the sheeting shall remain adhered in-place and exhibit no delaminating, cracking, or loss of retroreflectivity other than that loss due to abrasion of the sheeting surface.

BALLAST

1. Unballasted bases shall be large enough to hold up to 50 lbs. of sand. This base, when filled with the ballast material, should weigh between 35 lbs (minimum) and 50 lbs (maximum). The ballast may be sand in one to three sandbags separate from the base, sand in a sand-filled plastic base, or other ballasting devices as approved by the Engineer. Stacking of sandbags will be allowed, however height of sandbags above pavement surface may not exceed 12 inches.
2. Bases with built-in ballast shall weigh between 40 lbs. and 50 lbs. Built-in ballast can be constructed of an integral crumb rubber base or a solid rubber base.
3. Recycled truck tire sidewalls may be used for ballast on drums approved for this type of ballast on the CWZTCD list.
4. The ballast shall not be heavy objects, water, or any material that would become hazardous to motorists, pedestrians, or workers when the drum is struck by a vehicle.
5. When used in regions susceptible to freezing, drums shall have drainage holes in the bottoms so that water will not collect and freeze becoming a hazard when struck by a vehicle.
6. Ballast shall not be placed on top of drums.
7. Adhesives may be used to secure base of drums to pavement.

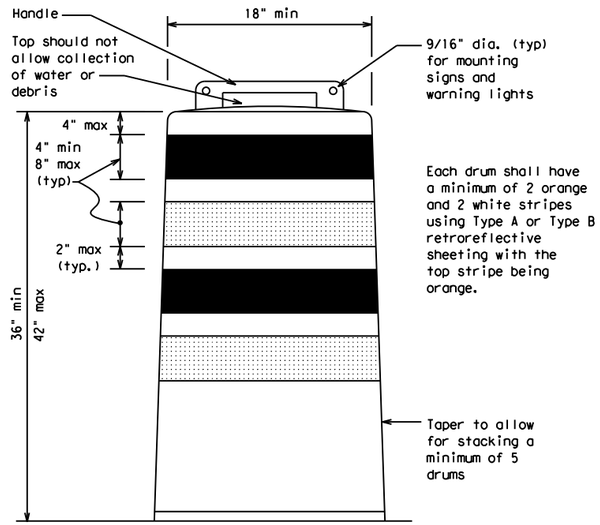

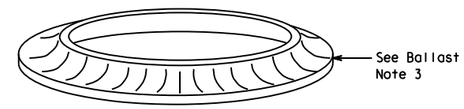

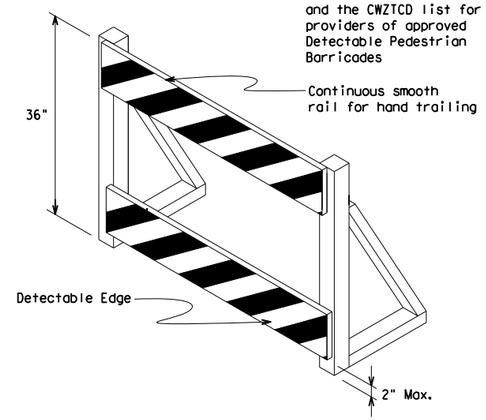

DETECTABLE PEDESTRIAN BARRICADES

1. When existing pedestrian facilities are disrupted, closed, or relocated in a TTC zone, the temporary facilities shall be detectable and include accessibility features consistent with the features present in the existing pedestrian facility. Refer to WZ(BTS-2) for Pedestrian Control requirements for Sidewalk Diversions, Sidewalk Detours and Crosswalk Closures.
2. Where pedestrians with visual disabilities normally use the closed sidewalk, a Detectable Pedestrian Barricade shall be placed across the full width of the closed sidewalk instead of a Type 3 Barricade.
3. Detectable pedestrian barricades similar to the one pictured above, longitudinal channelizing devices, some concrete barriers, and wood or chain link fencing with a continuous detectable edging can satisfactorily delineate a pedestrian path.
4. Tape, rope, or plastic chain strung between devices are not detectable, do not comply with the design standards in the "Americans with Disabilities Act Accessibility Guidelines (ADAAG)" and should not be used as a control for pedestrian movements.
5. Warning lights shall not be attached to detectable pedestrian barricades.
6. Detectable pedestrian barricades should use 8" nominal barricade rails as shown on BC(10) provided that the top rail provides a smooth continuous rail suitable for hand trailing with no splinters, burrs, or sharp edges.

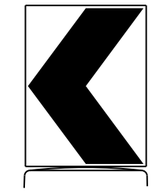

18" x 24" Sign
(Maximum Sign Dimension)
Chevron CW1-8, Opposing Traffic Lane Divider, Driveway sign D70a, Keep Right R4 series or other signs as approved by Engineer

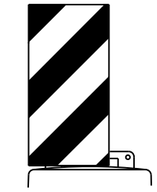

12" x 24"
Vertical Panel
mount with diagonals sloping down towards travel way

Plywood, Aluminum or Metal sign substrates shall NOT be used on plastic drums

SIGNS, CHEVRONS, AND VERTICAL PANELS MOUNTED ON PLASTIC DRUMS

1. Signs used on plastic drums shall be manufactured using substrates listed on the CWZTCD.
2. Chevrons and other work zone signs with an orange background shall be manufactured with Type B_{FL} or Type C_{FL} Orange sheeting meeting the color and retroreflectivity requirements of DMS-8300, "Sign Face Material," unless otherwise specified in the plans.
3. Vertical Panels shall be manufactured with orange and white sheeting meeting the requirements of DMS-8300 Type A or Type B. Diagonal stripes on Vertical Panels shall slope down toward the intended traveled lane.
4. Other sign messages (text or symbolic) may be used as approved by the Engineer. Sign dimensions shall not exceed 18 inches in width or 24 inches in height, except for the R9 series signs discussed in note 8 below.
5. Signs shall be installed using a 1/2 inch bolt (nominal) and nut, two washers, and one locking washer for each connection.
6. Mounting bolts and nuts shall be fully engaged and adequately torqued. Bolts should not extend more than 1/2 inch beyond nuts.
7. Chevrons may be placed on drums on the outside of curves, on merging tapers or on shifting tapers. When used in these locations, they may be placed on every drum or spaced not more than on every third drum. A minimum of three (3) should be used at each location called for in the plans.
8. R9-9, R9-10, R9-11 and R9-11a Sidewalk Closed signs which are 24 inches wide may be mounted on plastic drums, with approval of the Engineer.

Texas Department of Transportation — Traffic Safety Division Standard

BARRICADE AND CONSTRUCTION CHANNELIZING DEVICES

BC(8)-21

FILE: bc-21.dgn	DN: TxDOT	CK: TxDOT	DW: TxDOT	CK: TxDOT
© TxDOT November 2002	CONT	SECT	JOB	HIGHWAY
REVISIONS	0231	03	156	IH-14
4-03 8-14	DIST		COUNTY	SHEET NO.
9-07 5-21	WACO		BELL	15
7-13				

DISCLAIMER:
The use of this standard is governed by the "Texas Engineering Practice Act". No warranty of any kind is made by TxDOT for any purpose whatsoever. TxDOT assumes no responsibility for the conversion of this standard to other formats or for incorrect results or damages resulting from its use.

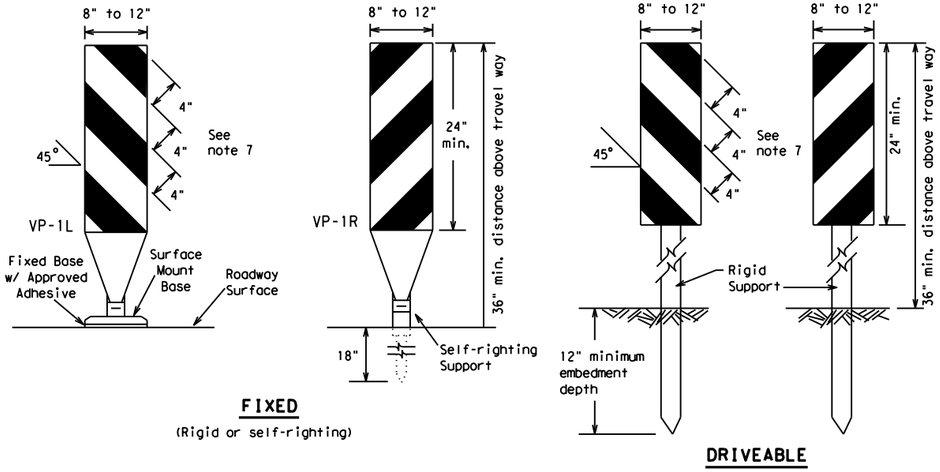

FIXED

(Rigid or self-righting)

DRIVEABLE

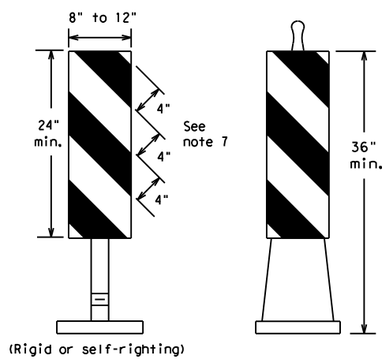

(Rigid or self-righting)

PORTABLE

1. Vertical Panels (VP's) are normally used to channelize traffic or divide opposing lanes of traffic.
2. VP's may be used in daytime or nighttime situations. They may be used at the edge of shoulder drop-offs and other areas such as lane transitions where positive daytime and nighttime delineation is required. The Engineer/Inspector shall refer to the Roadway Design Manual for additional requirements on the use VP's for drop-offs.
3. VP's should be mounted back to back if used at the edge of cuts adjacent to two-way two lane roadways. Stripes are to be reflective orange and reflective white and should always slope downward toward the travel lane.
4. VP's used on expressways and freeways or other high speed roadways, may have more than 270 square inches of retroreflective area facing traffic.
5. Self-righting supports are available with portable base. See "Compliant Work Zone Traffic Control Devices List" (CWZTCD).
6. Sheeting for the VP's shall be retroreflective Type A or Type B conforming to Departmental Material Specification DMS-8300, unless noted otherwise.
7. Where the height of reflective material on the vertical panel is 36 inches or greater, a panel stripe of 6 inches shall be used.

VERTICAL PANELS (VPs)

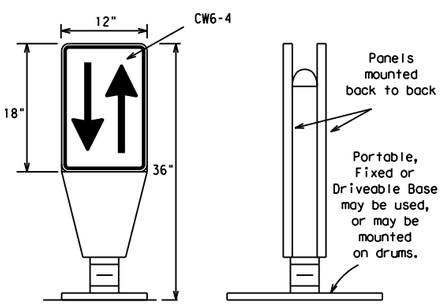

1. Opposing Traffic Lane Dividers (OTLD) are delineation devices designed to convert a normal one-way roadway section to two-way operation. OTLD's are used on temporary centerlines. The upward and downward arrows on the sign's face indicate the direction of traffic on either side of the divider. The base is secured to the pavement with an adhesive or rubber weight to minimize movement caused by a vehicle impact or wind gust.
2. The OTLD may be used in combination with 42" cones or VPs.
3. Spacing between the OTLD shall not exceed 500 feet. 42" cones or VPs placed between the OTLD's should not exceed 100 foot spacing.
4. The OTLD shall be orange with a black non-reflective legend. Sheeting for the OTLD shall be retroreflective Type B_{FL} or Type C_{FL} conforming to Departmental Material Specification DMS-8300, unless noted otherwise. The legend shall meet the requirements of DMS-8300.

OPPOSING TRAFFIC LANE DIVIDERS (OTLD)

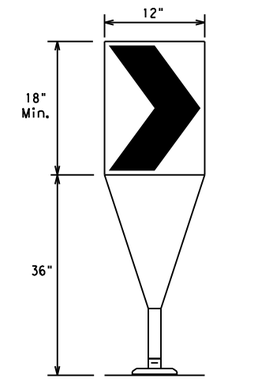

Fixed Base w/ Approved Adhesive (Driveable Base, or Flexible Support can be used)

1. The chevron shall be a vertical rectangle with a minimum size of 12 by 18 inches.
2. Chevrons are intended to give notice of a sharp change of alignment with the direction of travel and provide additional emphasis and guidance for vehicle operators with regard to changes in horizontal alignment of the roadway.
3. Chevrons, when used, shall be erected on the outside of a sharp curve or turn, or on the far side of an intersection. They shall be in line with and at right angles to approaching traffic. Spacing should be such that the motorist always has three in view, until the change in alignment eliminates its need.
4. To be effective, the chevron should be visible for at least 500 feet.
5. Chevrons shall be orange with a black nonreflective legend. Sheeting for the chevron shall be retroreflective Type B_{FL} or Type C_{FL} conforming to Departmental Material Specification DMS-8300, unless noted otherwise. The legend shall meet the requirements of DMS-8300.
6. For Long Term Stationary use on tapers or transitions on freeways and divided highways, self-righting chevrons may be used to supplement plastic drums but not to replace plastic drums.

CHEVRONS

GENERAL NOTES

1. Work Zone channelizing devices illustrated on this sheet may be installed in close proximity to traffic and are suitable for use on high or low speed roadways. The Engineer/Inspector shall ensure that spacing and placement is uniform and in accordance with the "Texas Manual on Uniform Traffic Control Devices" (TMUTCD).
2. Channelizing devices shown on this sheet may have a driveable, fixed or portable base. The requirement for self-righting channelizing devices must be specified in the General Notes or other plan sheets.
3. Channelizing devices on self-righting supports should be used in work zone areas where channelizing devices are frequently impacted by errant vehicles or vehicle related wind gusts making alignment of the channelizing devices difficult to maintain. Locations of these devices shall be detailed elsewhere in the plans. These devices shall conform to the TMUTCD and the "Compliant Work Zone Traffic Control Devices List" (CWZTCD).
4. The Contractor shall maintain devices in a clean condition and replace damaged, nonreflective, faded, or broken devices and bases as required by the Engineer/Inspector. The Contractor shall be required to maintain proper device spacing and alignment.
5. Portable bases shall be fabricated from virgin and/or recycled rubber. The portable bases shall weigh a minimum of 30 lbs.
6. Pavement surfaces shall be prepared in a manner that ensures proper bonding between the adhesives, the fixed mount bases and the pavement surface. Adhesives shall be prepared and applied according to the manufacturer's recommendations.
7. The installation and removal of channelizing devices shall not cause detrimental effects to the final pavement surfaces, including pavement surface discoloration or surface integrity. Driveable bases shall not be permitted on final pavement surfaces. The Engineer/Inspector shall approve all application and removal procedures of fixed bases.

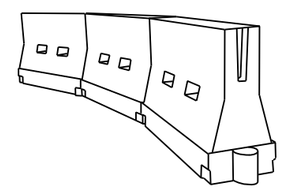

LONGITUDINAL CHANNELIZING DEVICES (LCD)

1. LCDs are crashworthy, lightweight, deformable devices that are highly visible, have good target value and can be connected together. They are not designed to contain or redirect a vehicle on impact.
2. LCDs may be used instead of a line of cones or drums.
3. LCDs shall be placed in accordance to application and installation requirements specific to the device, and used only when shown on the CWZTCD list.
4. LCDs should not be used to provide positive protection for obstacles, pedestrians or workers.
5. LCDs shall be supplemented with retroreflective delineation as required for temporary barriers on BC(7) when placed roughly parallel to the travel lanes.
6. LCDs used as barricades placed perpendicular to traffic should have at least one row of reflective sheeting meeting the requirements for barricade rails as shown on BC(10). Place reflective sheeting near the top of the LCD along the full length of the device.

WATER BALLASTED SYSTEMS USED AS BARRIERS

1. Water ballasted systems used as barriers shall not be used solely to channelize road users, but also to protect the work space per the appropriate Manual for Assessing Safety Hardware (MASH) crashworthiness requirements based on roadway speed and barrier application.
2. Water ballasted systems used to channelize vehicular traffic shall be supplemented with retroreflective delineation or channelizing devices to improve daytime/nighttime visibility. They may also be supplemented with pavement markings.
3. Water ballasted systems used as barriers shall be placed in accordance to application and installation requirements specific to the device, and used only when shown on the CWZTCD list.
4. Water ballasted systems used as barriers should not be used for a merging taper except in low speed (less than 45 MPH) urban areas. When used on a taper in a low speed urban area, the taper shall be delineated and the taper length should be designed to optimize road user operations considering the available geometric conditions.
5. When water ballasted systems used as barriers have blunt ends exposed to traffic, they should be attenuated as per manufacturer recommendations or flared to a point outside the clear zone.

If used to channelize pedestrians, longitudinal channelizing devices or water ballasted systems must have a continuous detectable bottom for users of long canes and the top of the unit shall not be less than 32 inches in height.

HOLLOW OR WATER BALLASTED SYSTEMS USED AS LONGITUDINAL CHANNELIZING DEVICES OR BARRIERS

Posted Speed	Formula	Minimum Desirable Taper Lengths **			Suggested Maximum Spacing of Channelizing Devices	
		10' Offset	11' Offset	12' Offset	On a Taper	On a Tangent
30	$L = \frac{WS^2}{60}$	150'	165'	180'	30'	60'
35		205'	225'	245'	35'	70'
40		265'	295'	320'	40'	80'
45	L = WS	450'	495'	540'	45'	90'
50		500'	550'	600'	50'	100'
55		550'	605'	660'	55'	110'
60		600'	660'	720'	60'	120'
65		650'	715'	780'	65'	130'
70		700'	770'	840'	70'	140'
75		750'	825'	900'	75'	150'
80		800'	880'	960'	80'	160'

** Taper lengths have been rounded off.
L=Length of Taper (FT.) W=Width of Offset (FT.)
S=Posted Speed (MPH)

SUGGESTED MAXIMUM SPACING OF CHANNELIZING DEVICES AND MINIMUM DESIRABLE TAPER LENGTHS

Texas Department of Transportation — Traffic Safety Division Standard

BARRICADE AND CONSTRUCTION CHANNELIZING DEVICES

BC(9)-21

FILE: bc-21.dgn	DN: TxDOT	CK: TxDOT	DW: TxDOT	CK: TxDOT
© TxDOT November 2002	CONT	SECT	JOB	HIGHWAY
REVISIONS	0231	03	156	IH-14
9-07 8-14	DIST		COUNTY	SHEET NO.
7-13 5-21	WACO		BELL	16

DATE: 7/11/2025 4:30:19 PM
FILE: c:\txdot\pw_online\txdot3\patrick.jalufka\d0807940\bc-21.dgn

DISCLAIMER:
The use of this standard is governed by the "Texas Engineering Practice Act". No warranty of any kind is made by TxDOT for any purpose whatsoever. TxDOT assumes no responsibility for the conversion of this standard to other formats or for incorrect results or damages resulting from its use.

TYPE 3 BARRICADES

1. Refer to the Compliant Work Zone Traffic Control Devices List (CWZTCD) for details of the Type 3 Barricades and a list of all materials used in the construction of Type 3 Barricades.
2. Type 3 Barricades shall be used at each end of construction projects closed to all traffic.
3. Barricades extending across a roadway should have stripes that slope downward in the direction toward which traffic must turn in detouring. When both right and left turns are provided, the chevron striping may slope downward in both directions from the center of the barricade. Where no turns are provided at a closed road, striping should slope downward in both directions toward the center of roadway.
4. Striping of rails, for the right side of the roadway, should slope downward to the left. For the left side of the roadway, striping should slope downward to the right.
5. Identification markings may be shown only on the back of the barricade rails. The maximum height of letters and/or company logos used for identification shall be 1".
6. Barricades shall not be placed parallel to traffic unless an adequate clear zone is provided.
7. Warning lights shall NOT be installed on barricades.
8. Where barricades require the use of weights to keep from turning over, the use of sandbags with dry, cohesionless sand is recommended. The sandbags will be tied shut to keep the sand from spilling and to maintain a constant weight. Sand bags shall not be stacked in a manner that covers any portion of a barricade rails reflective sheeting. Rock, concrete, iron, steel or other solid objects will NOT be permitted. Sandbags should weigh a minimum of 35 lbs and a maximum of 50 lbs. Sandbags shall be made of a durable material that tears upon vehicular impact. Rubber (such as tire inner tubes) shall not be used for sandbags. Sandbags shall only be placed along or upon the base supports of the device and shall not be suspended above ground level or hung with rope, wire, chains or other fasteners.
9. Sheeting for barricades shall be retroreflective Type A or Type B conforming to Departmental Material Specification DMS-8300 unless otherwise noted.

Barricades shall NOT be used as a sign support.

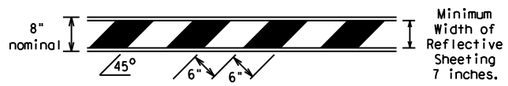

TYPICAL STRIPING DETAIL FOR BARRICADE RAIL

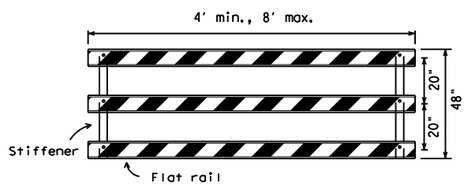

Stiffener may be inside or outside of support, but no more than 2 stiffeners shall be allowed on one barricade.

TYPICAL PANEL DETAIL FOR SKID OR POST TYPE BARRICADES

Each roadway of a divided highway shall be barricaded in the same manner.

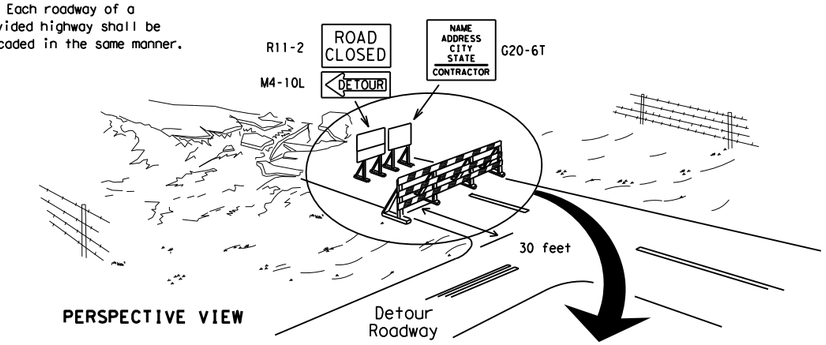

PERSPECTIVE VIEW

The three rails on Type 3 barricades shall be reflectorized orange and reflective white stripes on one side facing one-way traffic and both sides for two-way traffic.
Barricade striping should slant downward in the direction of detour.

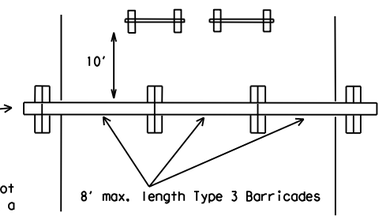

PLAN VIEW

1. Signs should be mounted on independent supports at a 7 foot mounting height in center of roadway. The signs should be a minimum of 10 feet behind Type 3 Barricades.
2. Advance signing shall be as specified elsewhere in the plans.

TYPE 3 BARRICADE (POST AND SKID) TYPICAL APPLICATION

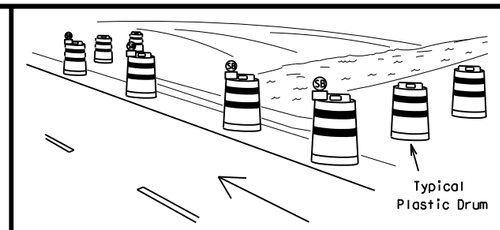

PERSPECTIVE VIEW

1. Where positive redirectional capability is provided, drums may be omitted.
2. Plastic construction fencing may be used with drums for safety as required in the plans.
3. Vertical Panels on flexible support may be substituted for drums when the shoulder width is less than 4 feet.
4. When the shoulder width is greater than 12 feet, steady-burn lights may be omitted if drums are used.
5. Drums must extend the length of the culvert widening.

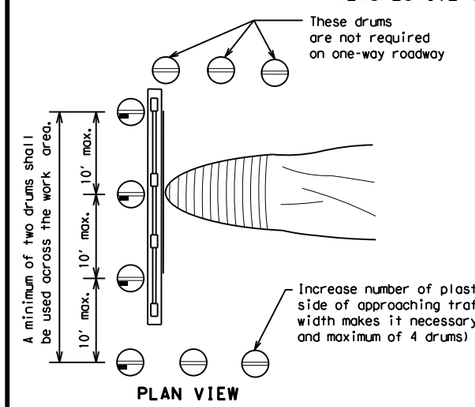

PLAN VIEW

LEGEND	
	Plastic drum
	Plastic drum with steady burn light or yellow warning reflector
SB	Steady burn warning light or yellow warning reflector

CULVERT WIDENING OR OTHER ISOLATED WORK WITHIN THE PROJECT LIMITS

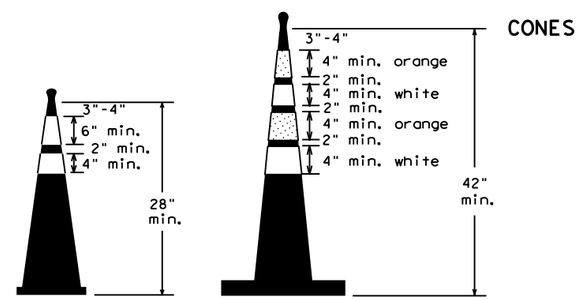

Two-Piece cones

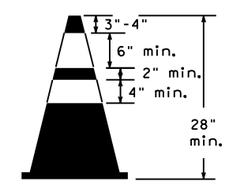

One-Piece cones

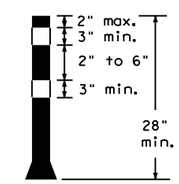

Tubular Marker

28" Cones shall have a minimum weight of 9 1/2 lbs.

42" 2-piece cones shall have a minimum weight of 30 lbs. including base.

1. Traffic cones and tubular markers shall be predominantly orange, and meet the height and weight requirements shown above.
2. One-piece cones have the body and base of the cone molded in one consolidated unit. Two-piece cones have a cone shaped body and a separate rubber base, or ballast, that is added to keep the device upright and in place.
3. Two-piece cones may have a handle or loop extending up to 8" above the minimum height shown, in order to aid in retrieving the device.
4. Cones or tubular markers shall have white or white and orange reflective bands as shown above. The reflective bands shall have a smooth, sealed outer surface and meet the requirements of Departmental Material Specification DMS-8300 Type A or Type B.
5. 28" cones and tubular markers are generally suitable for short duration and short-term stationary work as defined on BC(4). These should not be used for intermediate-term or long-term stationary work unless personnel is on-site to maintain them in their proper upright position.
6. 42" two-piece cones, vertical panels or drums are suitable for all work zone durations.
7. Cones or tubular markers used on each project should be of the same size and shape.

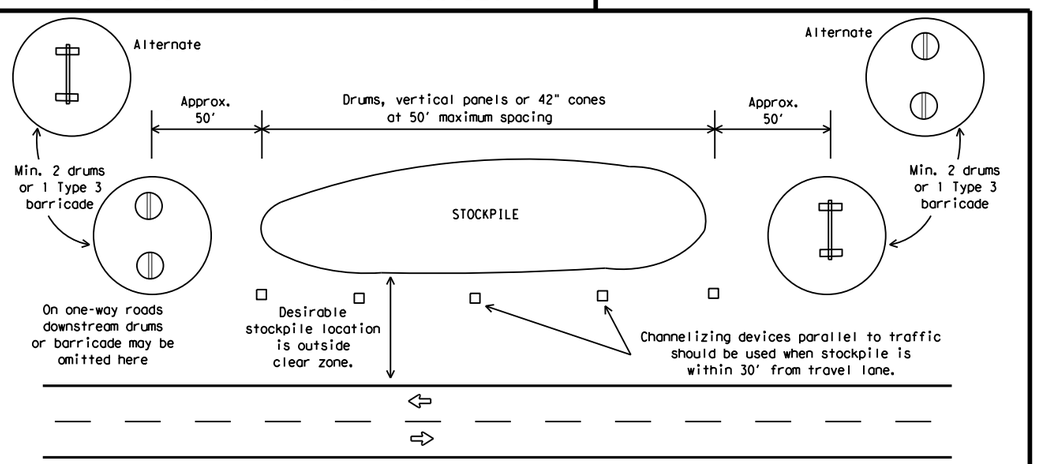

TRAFFIC CONTROL FOR MATERIAL STOCKPILES

SHEET 10 OF 12

Texas Department of Transportation — Traffic Safety Division Standard

BARRICADE AND CONSTRUCTION CHANNELIZING DEVICES

BC(10)-21

FILE: bc-21.dgn	DN: TxDOT	CK: TxDOT	DW: TxDOT	CK: TxDOT
© TxDOT November 2002	CONT	SECT	JOB	HIGHWAY
REVISIONS	0231	03	156	IH-14
9-07 8-14	DIST		COUNTY	SHEET NO.
7-13 5-21	WACO		BELL	17

DATE: 7/11/2025 4:30:20 PM
FILE: c:\txdot\pw_online\txdot3\patrick.jalufka\d0807940\bc-21.dgn

DISCLAIMER:
The use of this standard is governed by the "Texas Engineering Practice Act". No warranty of any kind is made by TxDOT for any purpose whatsoever. TxDOT assumes no responsibility for the conversion of this standard to other formats or for incorrect results or damages resulting from its use.

DATE: 7/11/2025 4:30:20 PM
FILE: c:\txdot\pw_online\txdot3\patrick.jallufka\d0807940\bc-21.dgn

WORK ZONE PAVEMENT MARKINGS

GENERAL

1. The Contractor shall be responsible for maintaining work zone and existing pavement markings, in accordance with the standard specifications and special provisions, on all roadways open to traffic within the CSJ limits unless otherwise stated in the plans.
2. Color, patterns and dimensions shall be in conformance with the "Texas Manual on Uniform Traffic Control Devices" (TMUTCD).
3. Additional supplemental pavement marking details may be found in the plans or specifications.
4. Pavement markings shall be installed in accordance with the TMUTCD and as shown on the plans.
5. When short term markings are required on the plans, short term markings shall conform with the TMUTCD, the plans and details as shown on the Standard Plan Sheet WZ(STPM).
6. When standard pavement markings are not in place and the roadway is opened to traffic, DO NOT PASS signs shall be erected to mark the beginning of the sections where passing is prohibited and PASS WITH CARE signs at the beginning of sections where passing is permitted.
7. All work zone pavement markings shall be installed in accordance with Item 662, "Work Zone Pavement Markings."

RAISED PAVEMENT MARKERS

1. Raised pavement markers are to be placed according to the patterns on BC(12).
2. All raised pavement markers used for work zone markings shall meet the requirements of Item 672, "RAISED PAVEMENT MARKERS" and Departmental Material Specification DMS-4200 or DMS-4300.

PREFABRICATED PAVEMENT MARKINGS

1. Removable prefabricated pavement markings shall meet the requirements of DMS-8241.
2. Non-removable prefabricated pavement markings (foil back) shall meet the requirements of DMS-8240.

MAINTAINING WORK ZONE PAVEMENT MARKINGS

1. The Contractor will be responsible for maintaining work zone pavement markings within the work limits.
2. Work zone pavement markings shall be inspected in accordance with the frequency and reporting requirements of work zone traffic control device inspections as required by Form 599.
3. The markings should provide a visible reference for a minimum distance of 300 feet during normal daylight hours and 160 feet when illuminated by automobile low-beam headlights at night, unless sight distance is restricted by roadway geometrics.
4. Markings failing to meet this criteria within the first 30 days after placement shall be replaced at the expense of the Contractor as per Specification Item 662.

REMOVAL OF PAVEMENT MARKINGS

1. Pavement markings that are no longer applicable, could create confusion or direct a motorist toward or into the closed portion of the roadway shall be removed or obliterated before the roadway is opened to traffic.
2. The above shall not apply to detours in place for less than three days, where flaggers and/or sufficient channelizing devices are used in lieu of markings to outline the detour route.
3. Pavement markings shall be removed to the fullest extent possible, so as not to leave a discernable marking. This shall be by any method approved by TxDOT Specification Item 677 for "Eliminating Existing Pavement Markings and Markers".
4. The removal of pavement markings may require resurfacing or seal coating portions of the roadway as described in Item 677.
5. Subject to the approval of the Engineer, any method that proves to be successful on a particular type pavement may be used.
6. Blast cleaning may be used but will not be required unless specifically shown in the plans.
7. Over-painting of the markings SHALL NOT BE permitted.
8. Removal of raised pavement markers shall be as directed by the Engineer.
9. Removal of existing pavement markings and markers will be paid for directly in accordance with Item 677, "ELIMINATING EXISTING PAVEMENT MARKINGS AND MARKERS," unless otherwise stated in the plans.
10. Black-out marking tape may be used to cover conflicting existing markings for periods less than two weeks when approved by the Engineer.

Temporary Flexible-Reflective Roadway Marker Tabs

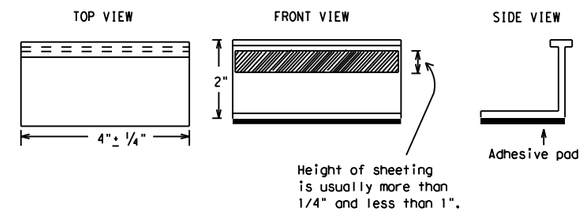

STAPLES OR NAILS SHALL NOT BE USED TO SECURE TEMPORARY FLEXIBLE-REFLECTIVE ROADWAY MARKER TABS TO THE PAVEMENT SURFACE

1. Temporary flexible-reflective roadway marker tabs used as guidemarks shall meet the requirements of DMS-8242.
2. Tabs detailed on this sheet are to be inspected and accepted by the Engineer or designated representative. Sampling and testing is not normally required, however at the option of the Engineer, either "A" or "B" below may be imposed to assure quality before placement on the roadway.
   A. Select five (5) or more tabs at random from each lot or shipment and submit to the Construction Division, Materials and Pavement Section to determine specification compliance.
   B. Select five (5) tabs and perform the following test. Affix five (5) tabs at 24 inch intervals on an asphaltic pavement in a straight line. Using a medium size passenger vehicle or pickup, run over the markers with the front and rear tires at a speed of 35 to 40 miles per hour, four (4) times in each direction. No more than one (1) out of the five (5) reflective surfaces shall be lost or displaced as a result of this test.
3. Small design variances may be noted between tab manufacturers.
4. See Standard Sheet WZ(STPM) for tab placement on new pavements. See Standard Sheet TCP(7-1) for tab placement on seal coat work.

RAISED PAVEMENT MARKERS USED AS GUIDEMARKS

1. Raised pavement markers used as guidemarks shall be from the approved product list, and meet the requirements of DMS-4200.
2. All temporary construction raised pavement markers provided on a project shall be of the same manufacturer.
3. Adhesive for guidemarks shall be bituminous material hot applied or butyl rubber pad for all surfaces, or thermoplastic for concrete surfaces.

Guidemarks shall be designated as:
YELLOW - (two amber reflective surfaces with yellow body).
WHITE - (one silver reflective surface with white body).

DEPARTMENTAL MATERIAL SPECIFICATIONS	
PAVEMENT MARKERS (REFLECTORIZED)	DMS-4200
TRAFFIC BUTTONS	DMS-4300
EPOXY AND ADHESIVES	DMS-6100
BITUMINOUS ADHESIVE FOR PAVEMENT MARKERS	DMS-6130
PERMANENT PREFABRICATED PAVEMENT MARKINGS	DMS-8240
TEMPORARY REMOVABLE, PREFABRICATED PAVEMENT MARKINGS	DMS-8241
TEMPORARY FLEXIBLE, REFLECTIVE ROADWAY MARKER TABS	DMS-8242

A list of prequalified reflective raised pavement markers, non-reflective traffic buttons, roadway marker tabs and other pavement markings can be found at the Material Producer List web address shown on BC(1).

Texas Department of Transportation — Traffic Safety Division Standard

BARRICADE AND CONSTRUCTION PAVEMENT MARKINGS

BC(11)-21

FILE: bc-21.dgn	DN: TxDOT	CK: TxDOT	DW: TxDOT	CK: TxDOT
© TxDOT February 1998	CONT	SECT	JOB	HIGHWAY
REVISIONS 2-98 9-07 5-21	0231	03	156	IH-14
1-02 7-13	DIST		COUNTY	SHEET NO.
11-02 8-14	WACO		BELL	18

105

PAVEMENT MARKING PATTERNS

REFLECTORIZED PAVEMENT MARKINGS - PATTERN A

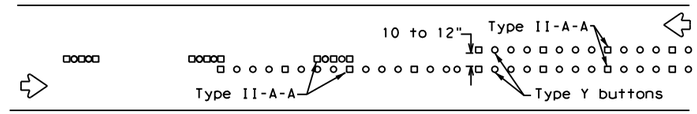

RAISED PAVEMENT MARKERS - PATTERN A

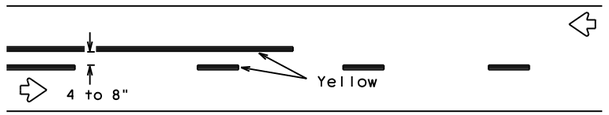

REFLECTORIZED PAVEMENT MARKINGS - PATTERN B

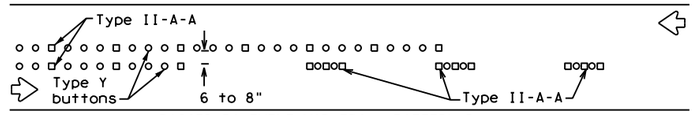

RAISED PAVEMENT MARKERS - PATTERN B

Pattern A is the TXDOT Standard, however Pattern B may be used if approved by the Engineer.
Prefabricated markings may be substituted for reflectorized pavement markings.

CENTER LINE & NO-PASSING ZONE BARRIER LINES FOR TWO-LANE, TWO-WAY HIGHWAYS

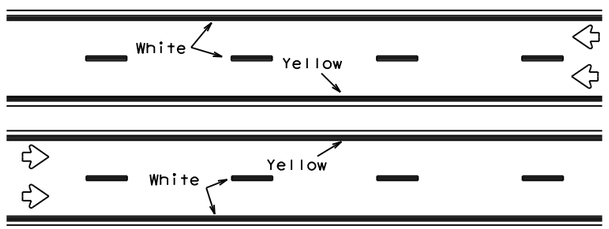

REFLECTORIZED PAVEMENT MARKINGS

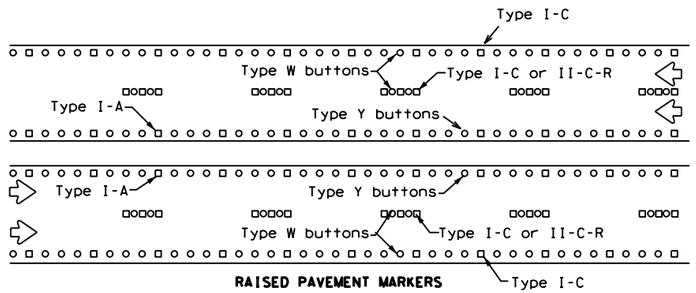

RAISED PAVEMENT MARKERS

Prefabricated markings may be substituted for reflectorized pavement markings.

EDGE & LANE LINES FOR DIVIDED HIGHWAY

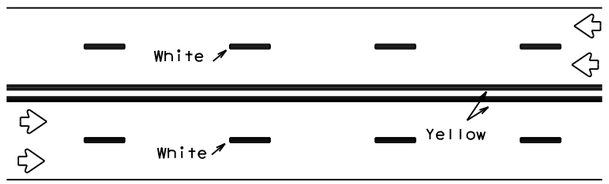

REFLECTORIZED PAVEMENT MARKINGS

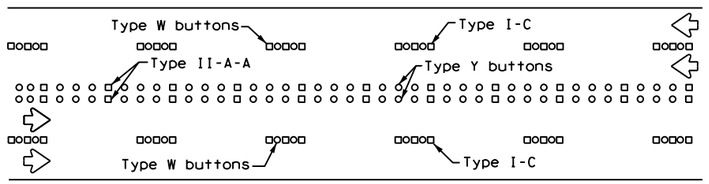

RAISED PAVEMENT MARKERS

Prefabricated markings may be substituted for reflectorized pavement markings.

LANE & CENTER LINES FOR MULTILANE UNDIVIDED HIGHWAYS

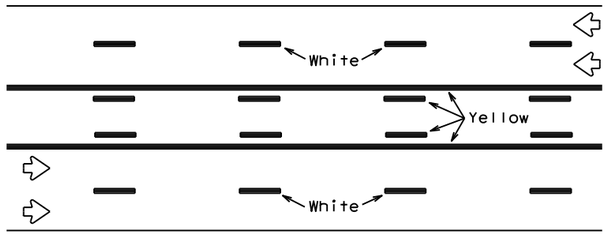

REFLECTORIZED PAVEMENT MARKINGS

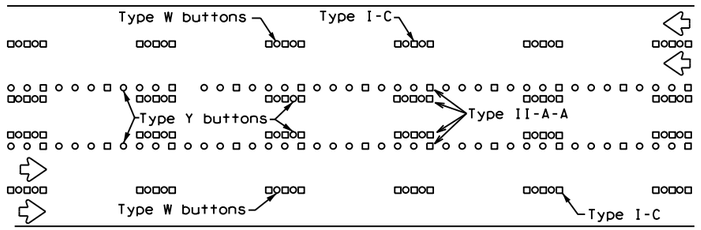

RAISED PAVEMENT MARKERS

Prefabricated markings may be substituted for reflectorized pavement markings.

TWO-WAY LEFT TURN LANE

STANDARD WORK ZONE PAVEMENT MARKINGS DETAILS

SOLID LINES

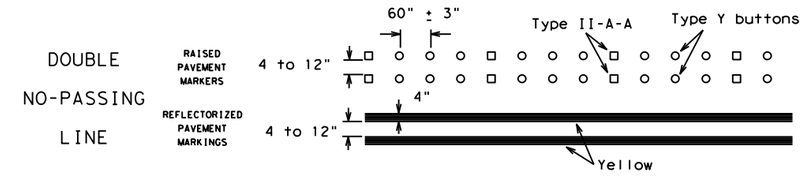

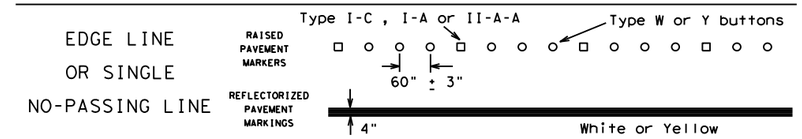

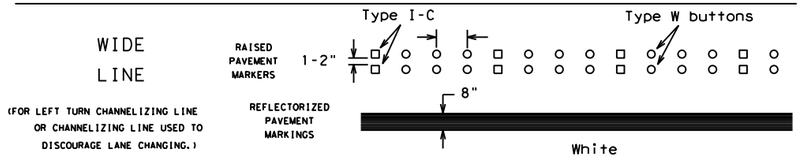

BROKEN LINES

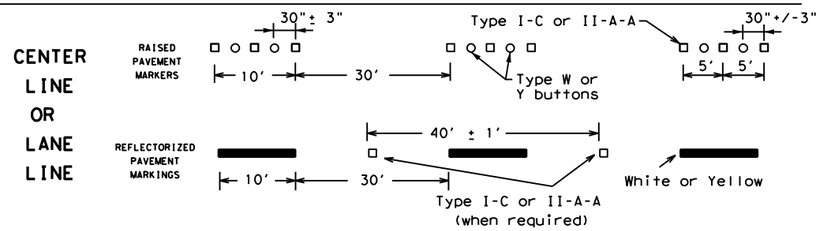

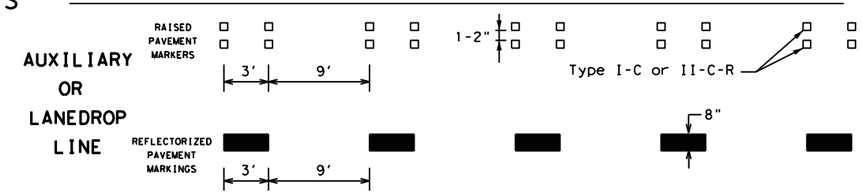

REMOVABLE MARKINGS WITH RAISED PAVEMENT MARKERS

If raised pavement markers are used to supplement REMOVABLE markings, the markers shall be applied to the top of the tape at the approximate mid length of tape used for broken lines or at 20 foot spacing for solid lines. This allows an easier removal of raised pavement markers and tape.

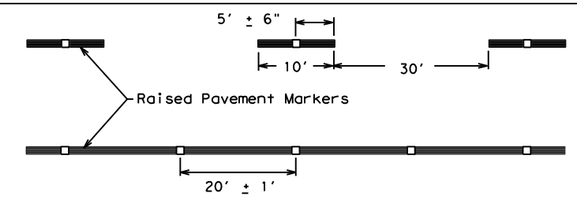

Centerline only - not to be used on edge lines

Raised pavement markers used as standard pavement markings shall be from the approved products list and meet the requirements of Item 672 "RAISED PAVEMENT MARKERS."

SHEET 12 OF 12

Texas Department of Transportation — Traffic Safety Division Standard

BARRICADE AND CONSTRUCTION PAVEMENT MARKING PATTERNS

BC(12)-21

FILE: bc-21.dgn	DN: TxDOT	CK: TxDOT	DW: TxDOT	CK: TxDOT
© TxDOT February 1998	CONT	SECT	JOB	HIGHWAY
REVISIONS 1-97 9-07 5-21	0231	03	156	IH-14
2-98 7-13	DIST		COUNTY	SHEET NO.
11-02 8-14	WACO		BELL	19

106

DISCLAIMER:
The use of this standard is governed by the "Texas Engineering Practice Act". No warranty of any kind is made by TxDOT for any purpose whatsoever. TxDOT assumes no responsibility for the conversion of this standard to other formats or for incorrect results or damages resulting from its use.

DATE: 7/11/2025 4:30:20 PM
FILE: c:\txdot\pw_online\txdot3\patrick.jalufka\d0807940\bc-21.dgn

DISCLAIMER:
The use of this standard is governed by the "Texas Engineering Practice Act". No warranty of any kind is made by TxDOT for any purpose whatsoever. TxDOT assumes no responsibility for the conversion of this standard to other formats or for incorrect results or damages resulting from its use.

DATE: 7/11/2025 4:30:32 PM
FILE: c:\txdot\pw_online\txdot3\patrick.jalufka\d0807940\tcpl-1-18.dgn

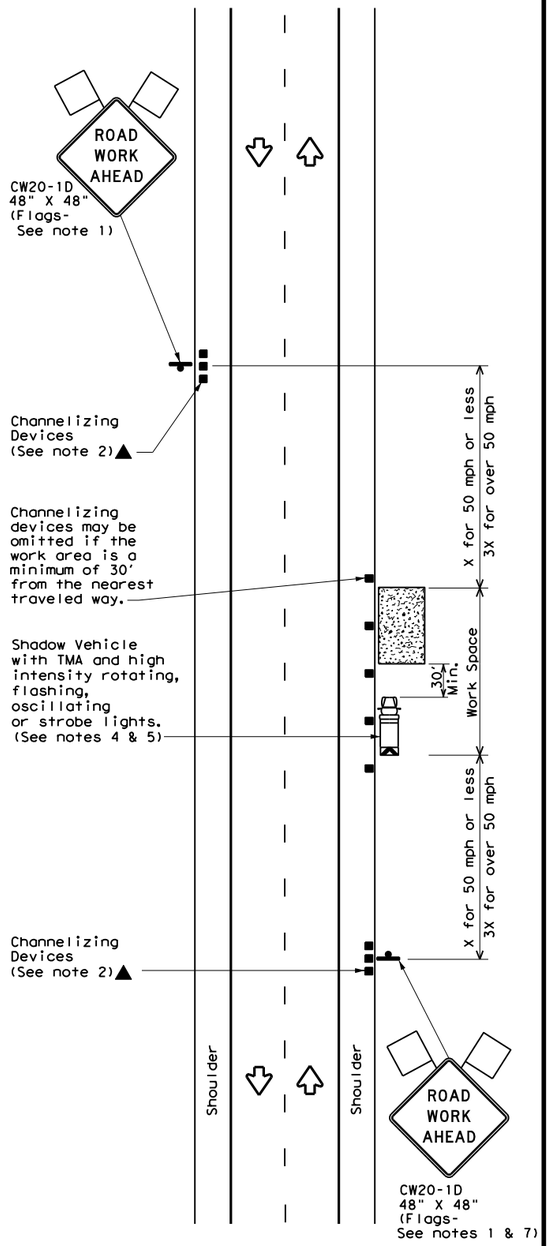

TCP (1-1a)

WORK SPACE NEAR SHOULDER
Conventional Roads

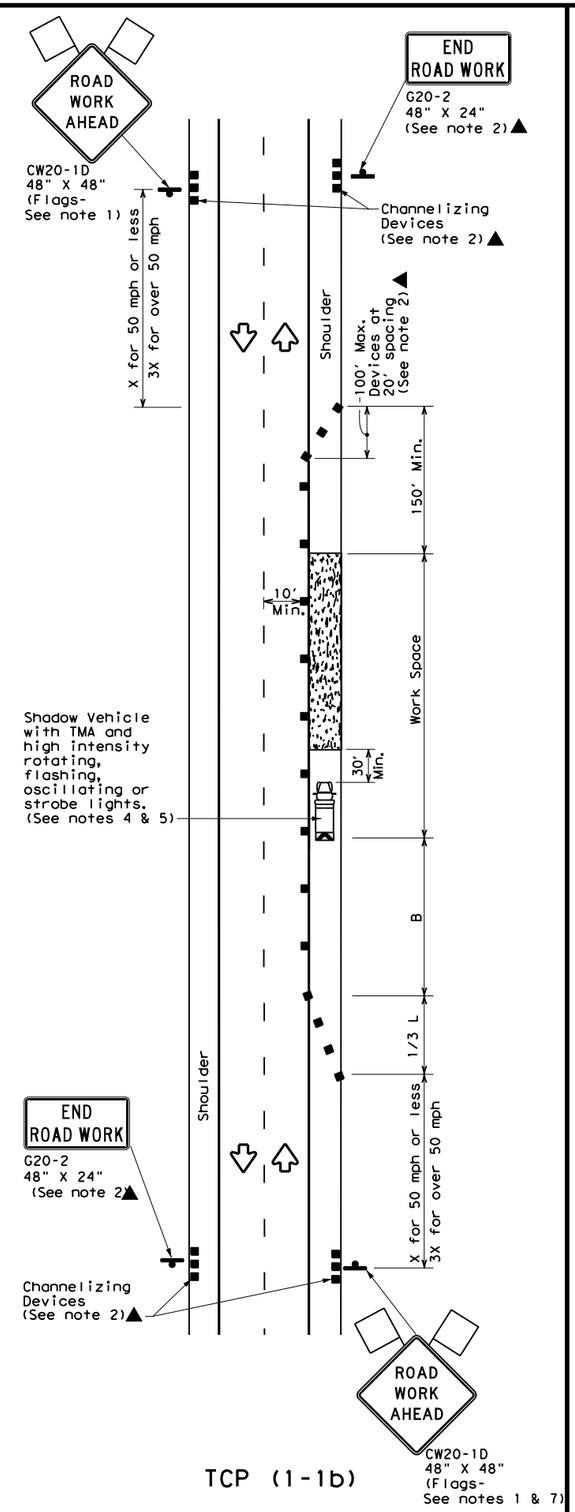

TCP (1-1b)

WORK SPACE ON SHOULDER
Conventional Roads

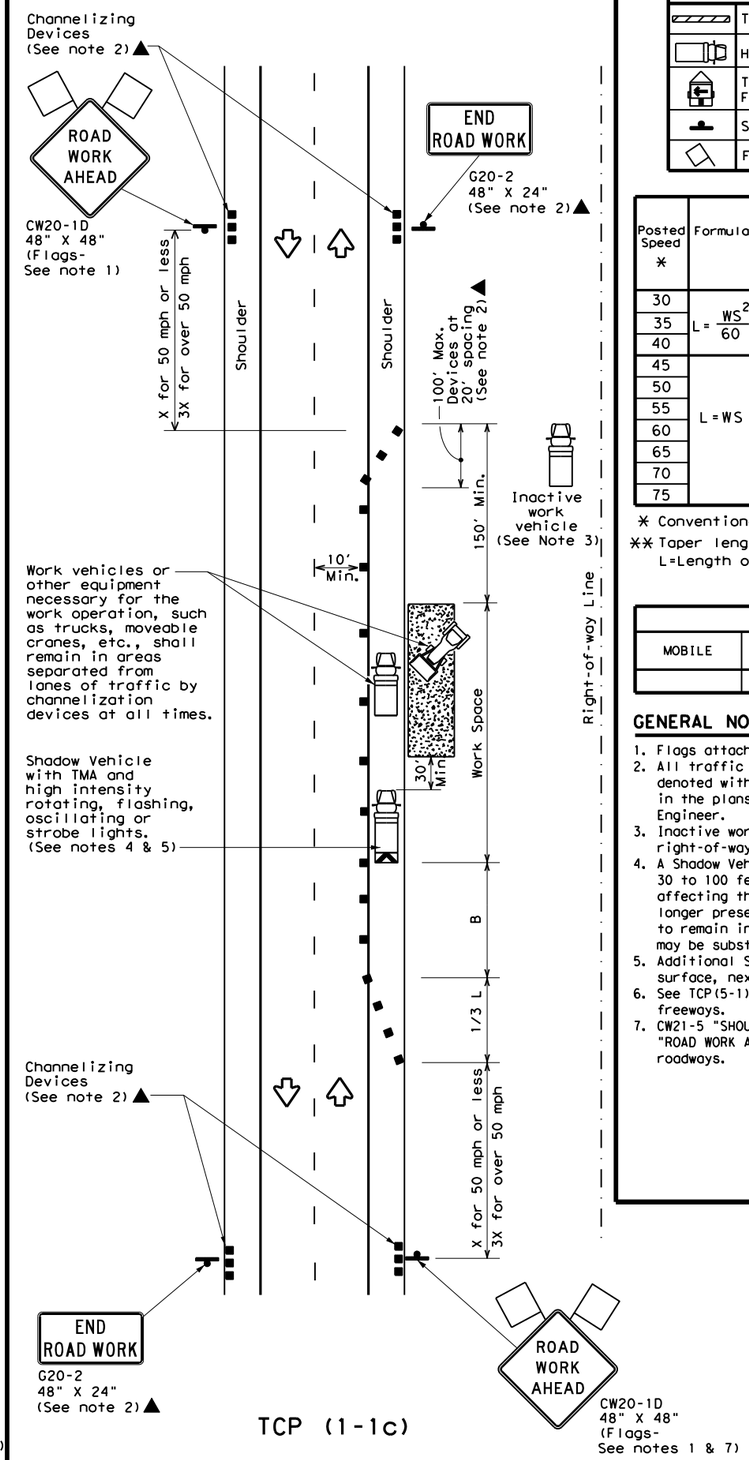

TCP (1-1c)

WORK VEHICLES ON SHOULDER
Conventional Roads

LEGEND

	Type 3 Barricade		Channelizing Devices
	Heavy Work Vehicle		Truck Mounted Attenuator (TMA)
	Trailer Mounted Flashing Arrow Board		Portable Changeable Message Sign (PCMS)
	Sign		Traffic Flow
	Flag		Flagger

Posted Speed *	Formula	Minimum Desirable Taper Lengths ** 10' Offset	11' Offset	12' Offset	Suggested Maximum Spacing of Channelizing Devices On a Taper	On a Tangent	Minimum Sign Spacing "X" Distance	Suggested Longitudinal Buffer Space "B"
30	$L = \frac{WS^2}{60}$	150'	165'	180'	30'	60'	120'	90'
35		205'	225'	245'	35'	70'	160'	120'
40		265'	295'	320'	40'	80'	240'	155'
45	L = WS	450'	495'	540'	45'	90'	320'	195'
50		500'	550'	600'	50'	100'	400'	240'
55		550'	605'	660'	55'	110'	500'	295'
60		600'	660'	720'	60'	120'	600'	350'
65		650'	715'	780'	65'	130'	700'	410'
70		700'	770'	840'	70'	140'	800'	475'
75		750'	825'	900'	75'	150'	900'	540'

* Conventional Roads Only
** Taper lengths have been rounded off.
L=Length of Taper(FT) W=Width of Offset(FT) S=Posted Speed(MPH)

TYPICAL USAGE

MOBILE	SHORT DURATION	SHORT TERM STATIONARY	INTERMEDIATE TERM STATIONARY	LONG TERM STATIONARY
	✓	✓		

GENERAL NOTES

1. Flags attached to signs where shown are REQUIRED.
2. All traffic control devices illustrated are REQUIRED, except those denoted with the triangle symbol may be omitted when stated elsewhere in the plans, or for routine maintenance work, when approved by the Engineer.
3. Inactive work vehicles or other equipment should be parked near the right-of-way line and not parked on the paved shoulder.
4. A Shadow Vehicle with a TMA should be used anytime it can be positioned 30 to 100 feet in advance of the area of crew exposure without adversely affecting the performance or quality of the work. If workers are no longer present but road or work conditions require the traffic control to remain in place, Type 3 Barricades or other channelizing devices may be substituted for the Shadow Vehicle and TMA.
5. Additional Shadow Vehicles with TMAs may be positioned off the paved surface, next to those shown in order to protect wider work spaces.
6. See TCP(5-1) for shoulder work on divided highways, expressways and freeways.
7. CW21-5 "SHOULDER WORK" signs may be used in place of CW20-1D "ROAD WORK AHEAD" signs for shoulder work on conventional roadways.

Texas Department of Transportation — Traffic Operations Division Standard

TRAFFIC CONTROL PLAN CONVENTIONAL ROAD SHOULDER WORK

TCP(1-1)-18

FILE: tcp1-1-18.dgn	DN:	CK:	DW:	CK:
© TxDOT December 1985	CONT	SECT	JOB	HIGHWAY
REVISIONS 2-94 4-98 / 8-95 2-12 / 1-97 2-18	0231	03	156	IH-14
	DIST		COUNTY	SHEET NO.
	WACO		BELL	20

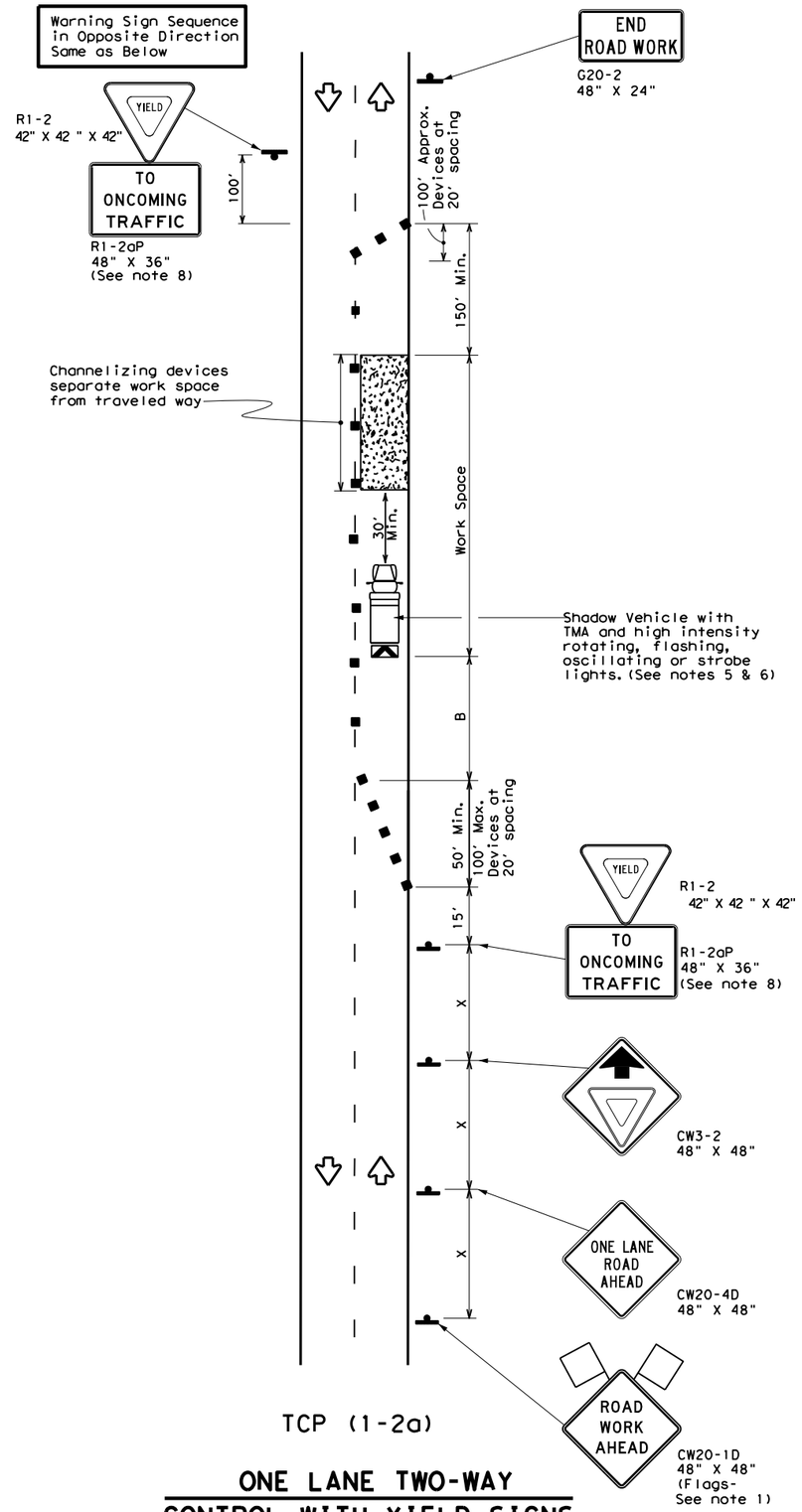

TCP (1-2a)

ONE LANE TWO-WAY CONTROL WITH YIELD SIGNS

(Less than 2000 ADT - See note 7)

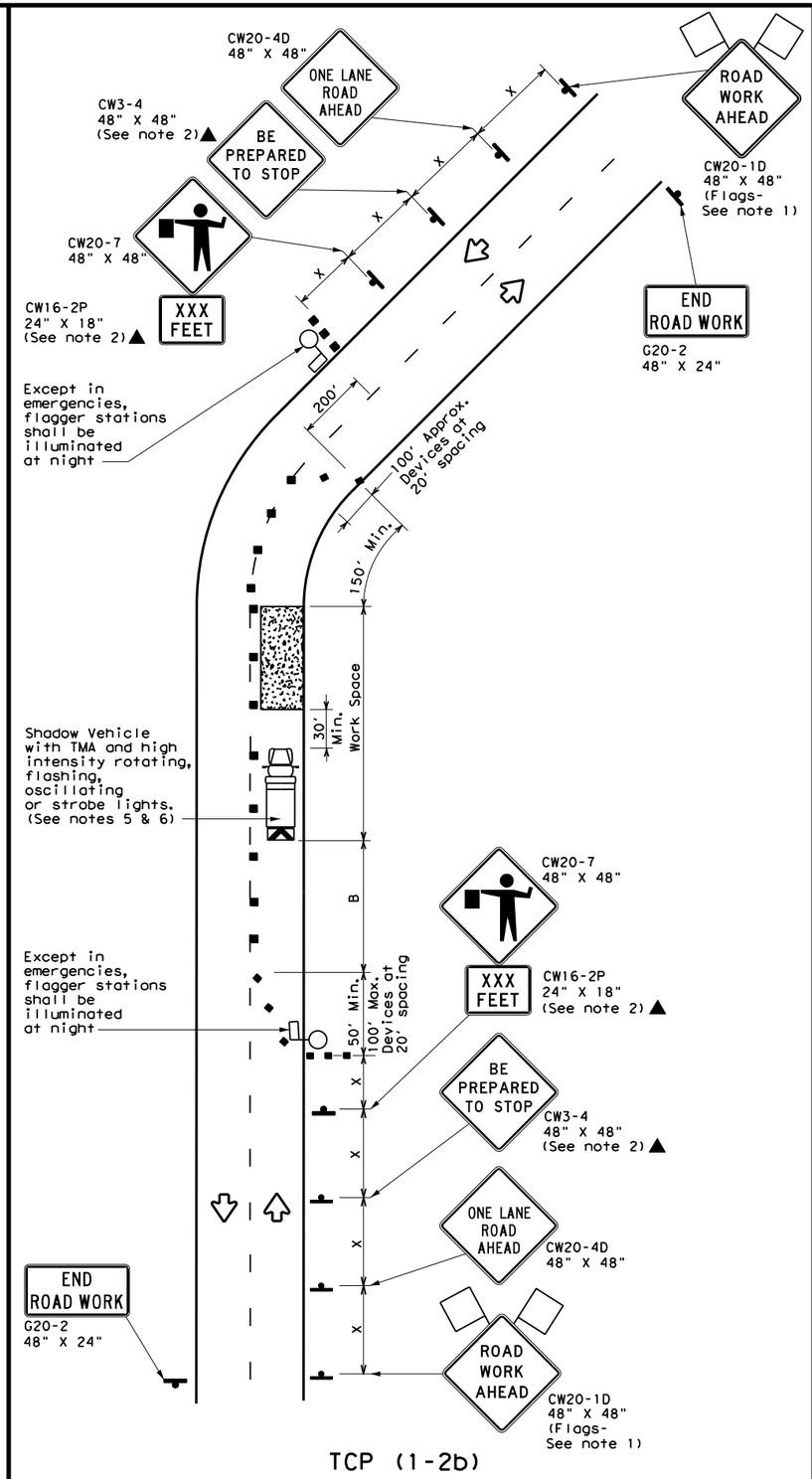

TCP (1-2b)

ONE LANE TWO-WAY CONTROL WITH FLAGGERS

LEGEND

	Type 3 Barricade		Channelizing Devices
	Heavy Work Vehicle		Truck Mounted Attenuator (TMA)
	Trailer Mounted Flashing Arrow Board	M	Portable Changeable Message Sign (PCMS)
	Sign		Traffic Flow
	Flag		Flagger

Posted Speed ✱	Formula	Minimum Desirable Taper Lengths ✱✱ 10' Offset	11' Offset	12' Offset	Suggested Maximum Spacing of Channelizing Devices On a Taper	On a Tangent	Minimum Sign Spacing "X" Distance	Suggested Longitudinal Buffer Space "B"	Stopping Sight Distance
30	$L = \frac{WS^2}{60}$	150'	165'	180'	30'	60'	120'	90'	200'
35		205'	225'	245'	35'	70'	160'	120'	250'
40		265'	295'	320'	40'	80'	240'	155'	305'
45	L = WS	450'	495'	540'	45'	90'	320'	195'	360'
50		500'	550'	600'	50'	100'	400'	240'	425'
55		550'	605'	660'	55'	110'	500'	295'	495'
60		600'	660'	720'	60'	120'	600'	350'	570'
65		650'	715'	780'	65'	130'	700'	410'	645'
70		700'	770'	840'	70'	140'	800'	475'	730'
75		750'	825'	900'	75'	150'	900'	540'	820'

✱ Conventional Roads Only
✱✱ Taper lengths have been rounded off.
L=Length of Taper(FT) W=Width of Offset(FT) S=Posted Speed(MPH)

TYPICAL USAGE

MOBILE	SHORT DURATION	SHORT TERM STATIONARY	INTERMEDIATE TERM STATIONARY	LONG TERM STATIONARY
	✓	✓		

GENERAL NOTES

1. Flags attached to signs where shown are REQUIRED.
2. All traffic control devices illustrated are REQUIRED, except those denoted with the triangle symbol may be omitted when stated elsewhere in the plans, or for routine maintenance work, when approved by the Engineer.
3. The CW3-4 "BE PREPARED TO STOP" sign may be installed after the CW20-4D "ONE LANE ROAD AHEAD" sign, but proper sign spacing shall be maintained.
4. Sign spacing may be increased or an additional CW20-1D "ROAD WORK AHEAD" sign may be used if advance warning ahead of the flagger or R1-2 "YIELD" sign is less than 1500 feet.
5. A Shadow Vehicle with a TMA should be used anytime it can be positioned 30 to 100 feet in advance of the area of crew exposure without adversely affecting the performance or quality of the work. If workers are no longer present but road or work conditions require the traffic control to remain in place, Type 3 Barricades or other channelizing devices may be substituted for the Shadow Vehicle and TMA.
6. Additional Shadow Vehicles with TMAs may be positioned off the paved surface, next to those shown in order to protect wider work spaces.

TCP (1-2a)

7. R1-2 "YIELD" sign traffic control may be used on projects with approaches that have adequate sight distance. For projects in urban areas, work spaces should be no longer than one half city block. In rural areas on roadways with less than 2000 ADT, work spaces should be no longer than 400 feet.
8. R1-2 "YIELD" sign with R1-2aP "TO ONCOMING TRAFFIC" plaque shall be placed on a support at a 7 foot minimum mounting height.

TCP (1-2b)

9. Flaggers should use two-way radios or other methods of communication to control traffic.
10. Length of work space should be based on the ability of flaggers to communicate.
11. If the work space is located near a horizontal or vertical curve, the buffer distances should be increased in order to maintain adequate stopping sight distance to the flagger and a queue of stopped vehicles (see table above).
12. Channelizing devices on the center-line may be omitted when a pilot car is leading traffic and approved by the Engineer.
13. Flaggers should use 24" STOP/SLOW paddles to control traffic. Flags should be limited to emergency situations.

Texas Department of Transportation — Traffic Operations Division Standard

TRAFFIC CONTROL PLAN ONE-LANE TWO-WAY TRAFFIC CONTROL

TCP(1-2)-18

FILE: tcp1-2-18.dgn	DN:	CK:	DW:	CK:
©TxDOT December 1985	CONT	SECT	JOB	HIGHWAY
REVISIONS 4-90 4-98	0231	03	156	IH-14
2-94 2-12	DIST		COUNTY	SHEET NO.
1-97 2-18	WACO		BELL	21

DISCLAIMER:
The use of this standard is governed by the "Texas Engineering Practice Act". No warranty of any kind is made by TxDOT for any purpose whatsoever. TxDOT assumes no responsibility for the conversion of this standard to other formats or for incorrect results or damages resulting from its use.

DATE: 7/11/2025 4:30:44 PM
FILE: c:\txdot\pw_online\txdot3\patrick.jalufka\d0807940\tcp1-2-18.dgn

DISCLAIMER:
The use of this standard is governed by the "Texas Engineering Practice Act". No warranty of any kind is made by TxDOT for any purpose whatsoever. TxDOT assumes no responsibility for the conversion of this standard to other formats or for incorrect results or damages resulting from its use.

DATE: 7/11/2025 4:30:57 PM
FILE: c:\txdot\pw_online\txdot3\patrick.jalufka\d0807940\tcp1-3-18.dgn

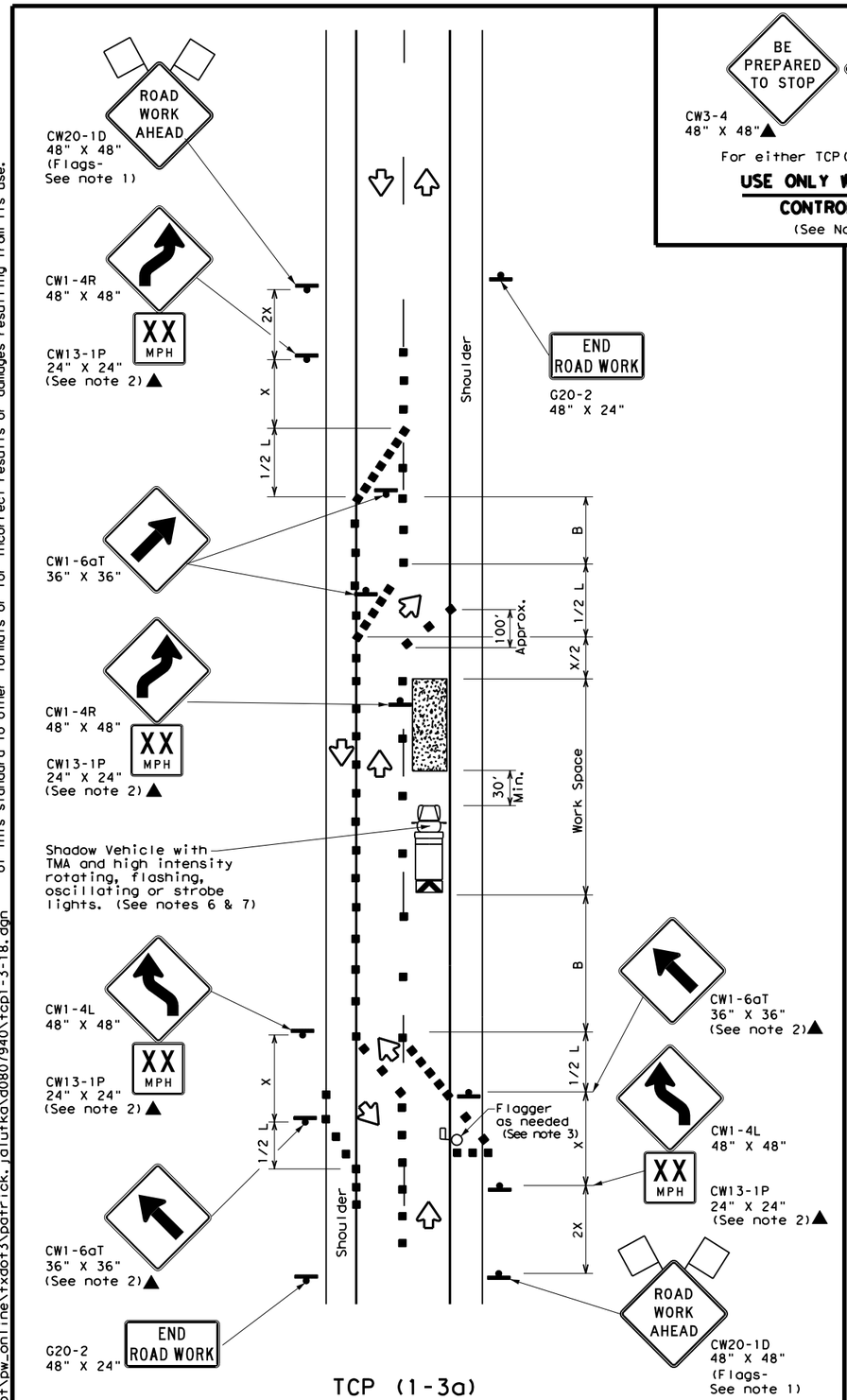

TCP (1-3a)
2-LANE ROADWAY WITH PAVED SHOULDERS

ONE LANE CLOSED
ADEQUATE FIELD OF VIEW

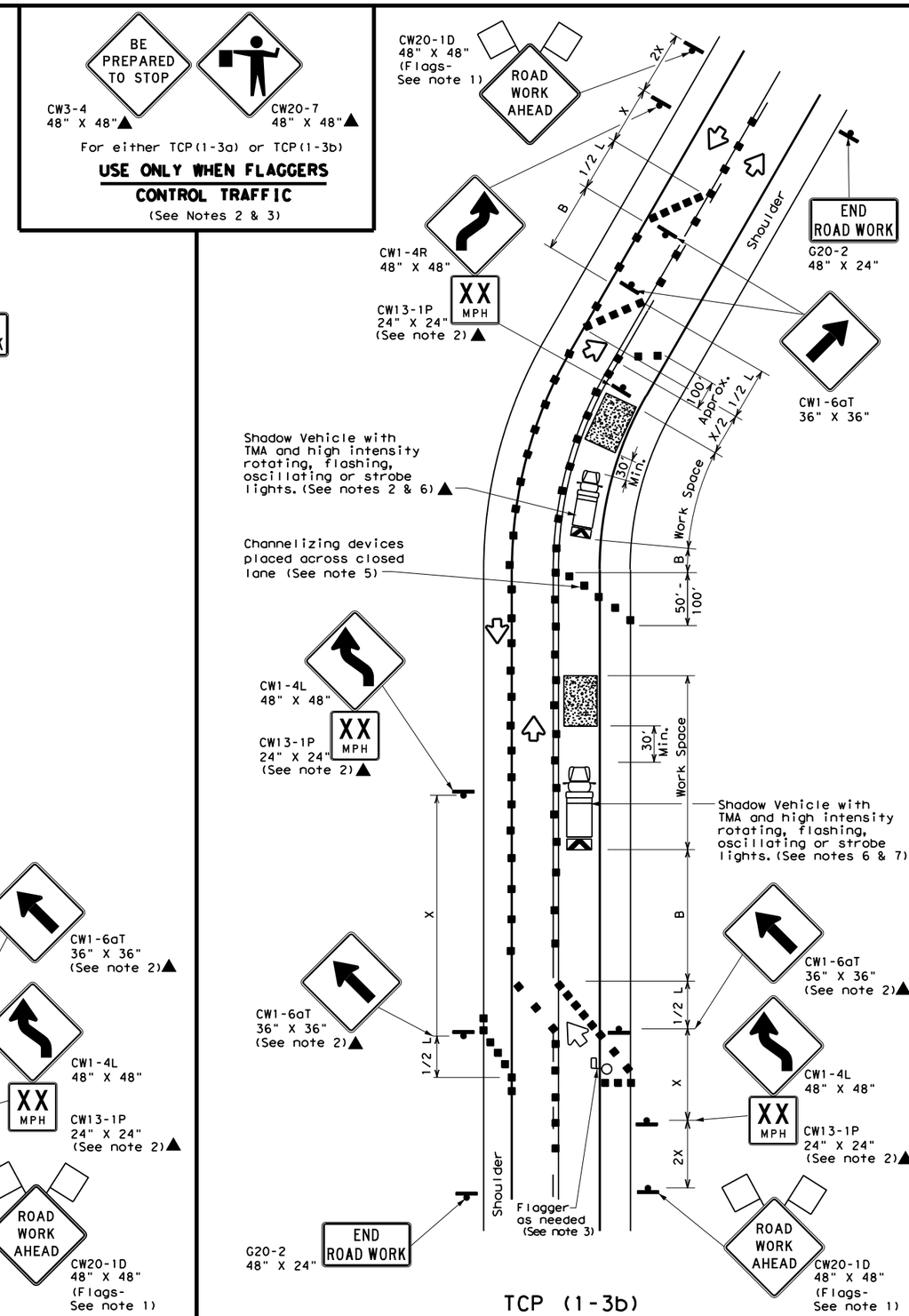

TCP (1-3b)
2-LANE ROADWAY WITH PAVED SHOULDERS

ONE LANE CLOSED
INADEQUATE FIELD OF VIEW

LEGEND

	Type 3 Barricade		Channelizing Devices
	Heavy Work Vehicle		Truck Mounted Attenuator (TMA)
	Trailer Mounted Flashing Arrow Board		Portable Changeable Message Sign (PCMS)
	Sign		Traffic Flow
	Flag		Flagger

Posted Speed *	Formula	Minimum Desirable Taper Lengths ** 10' Offset	11' Offset	12' Offset	Suggested Maximum Spacing of Channelizing Devices On a Taper	On a Tangent	Minimum Sign Spacing "X" Distance	Suggested Longitudinal Buffer Space "B"
30	$L = \frac{WS^2}{60}$	150'	165'	180'	30'	60'	120'	90'
35		205'	225'	245'	35'	70'	160'	120'
40		265'	295'	320'	40'	80'	240'	155'
45	L = WS	450'	495'	540'	45'	90'	320'	195'
50		500'	550'	600'	50'	100'	400'	240'
55		550'	605'	660'	55'	110'	500'	295'
60		600'	660'	720'	60'	120'	600'	350'
65		650'	715'	780'	65'	130'	700'	410'
70		700'	770'	840'	70'	140'	800'	475'
75		750'	825'	900'	75'	150'	900'	540'

* Conventional Roads Only
** Taper lengths have been rounded off.
L=Length of Taper(FT) W=Width of Offset(FT) S=Posted Speed(MPH)

TYPICAL USAGE

MOBILE	SHORT DURATION	SHORT TERM STATIONARY	INTERMEDIATE TERM STATIONARY	LONG TERM STATIONARY
	✓	✓		

GENERAL NOTES

1. Flags attached to signs where shown are REQUIRED.
2. All traffic control devices illustrated are REQUIRED, except those denoted with the triangle symbol may be omitted when stated elsewhere in the plans, or for routine maintenance work, when approved by the Engineer.
3. Flagger control should NOT be used unless roadway conditions or heavy traffic volume require additional emphasis to safely control traffic. Additional flaggers may be positioned in advance of traffic queues to alert traffic to reduce speed.
4. DO NOT PASS, PASS WITH CARE and construction regulatory speed zone signs may be installed downstream of the ROAD WORK AHEAD signs.
5. When the work zone is made up of several work spaces, channelizing devices should be placed laterally across the closed lane to re-emphasize closure. Laterally placed channelizing devices should be repeated every 500 to 1000 feet in urban areas and every 1/4 to 1/2 mile in rural areas.
6. A Shadow Vehicle with a TMA should be used anytime it can be positioned 30 to 100 feet in advance of the area of crew exposure without adversely affecting the performance or quality of the work. If workers are no longer present but road or work conditions require the traffic control to remain in place, Type 3 Barricades or other channelizing devices may be substituted for the Shadow Vehicle and TMA.
7. Additional Shadow Vehicles with TMAs may be positioned off the paved surface, next to those shown in order to protect wider work spaces.
8. Where traffic is directed over a yellow centerline, channelizing devices which separate two-way traffic should be spaced on tapers at 20', or 15' if posted speed are 35 mph or slower, and for tangent sections, at 1/2S where S is the speed in mph. This tighter device spacing is intended for the area of conflicting markings not the entire work zone.

Texas Department of Transportation — Traffic Operations Division Standard

TRAFFIC CONTROL PLAN TRAFFIC SHIFTS ON TWO LANE ROADS

TCP(1-3)-18

FILE: tcp1-3-18.dgn	DN:	CK:	DW:	CK:
© TxDOT December 1985	CONT	SECT	JOB	HIGHWAY
REVISIONS	0231	03	156	IH-14
2-94 4-98	DIST		COUNTY	SHEET NO.
8-95 2-12	WACO		BELL	22
1-97 2-18				

DISCLAIMER:
The use of this standard is governed by the "Texas Engineering Practice Act". No warranty of any kind is made by TxDOT for any purpose whatsoever. TxDOT assumes no responsibility for the conversion of this standard to other formats or for incorrect results or damages resulting from its use.

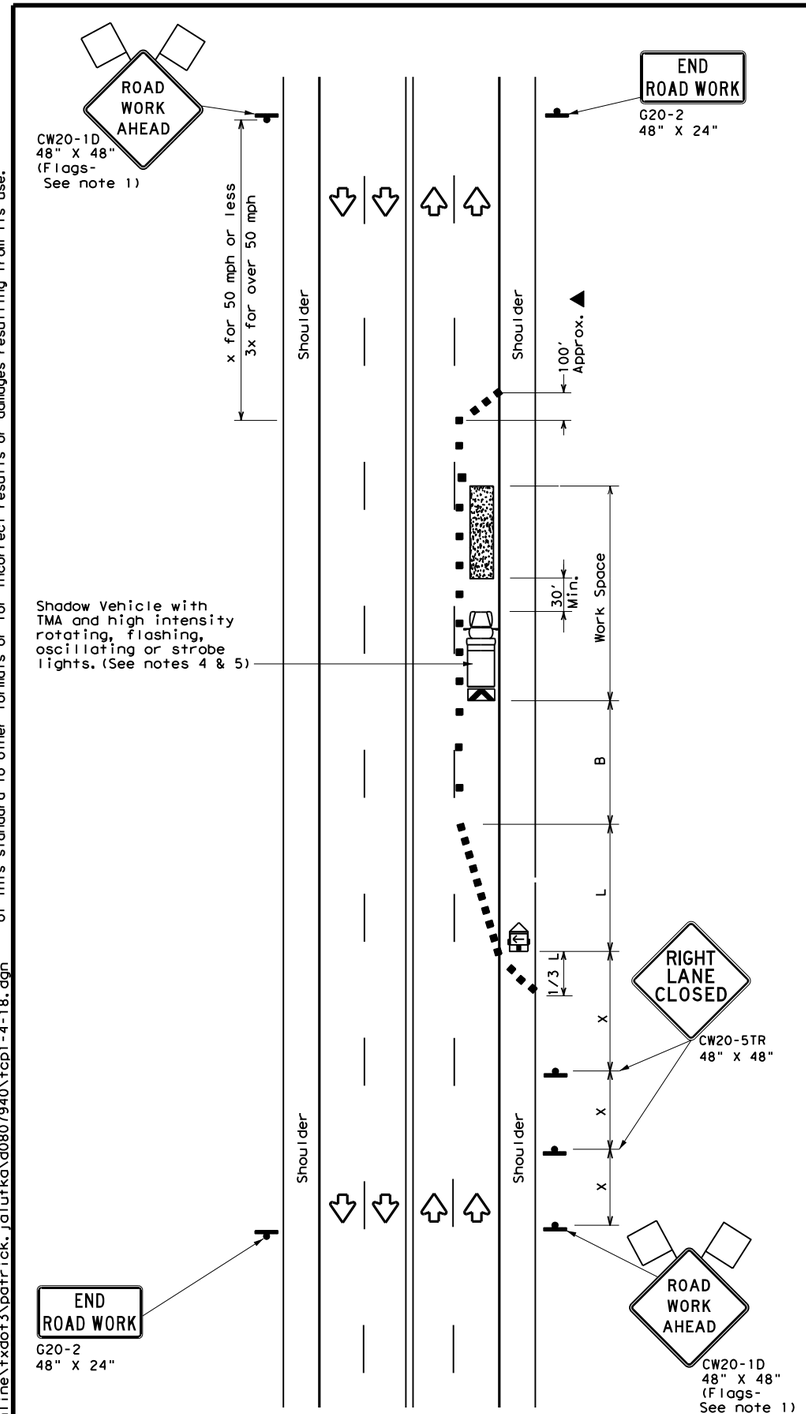

TCP (1-4a)

ONE LANE CLOSED

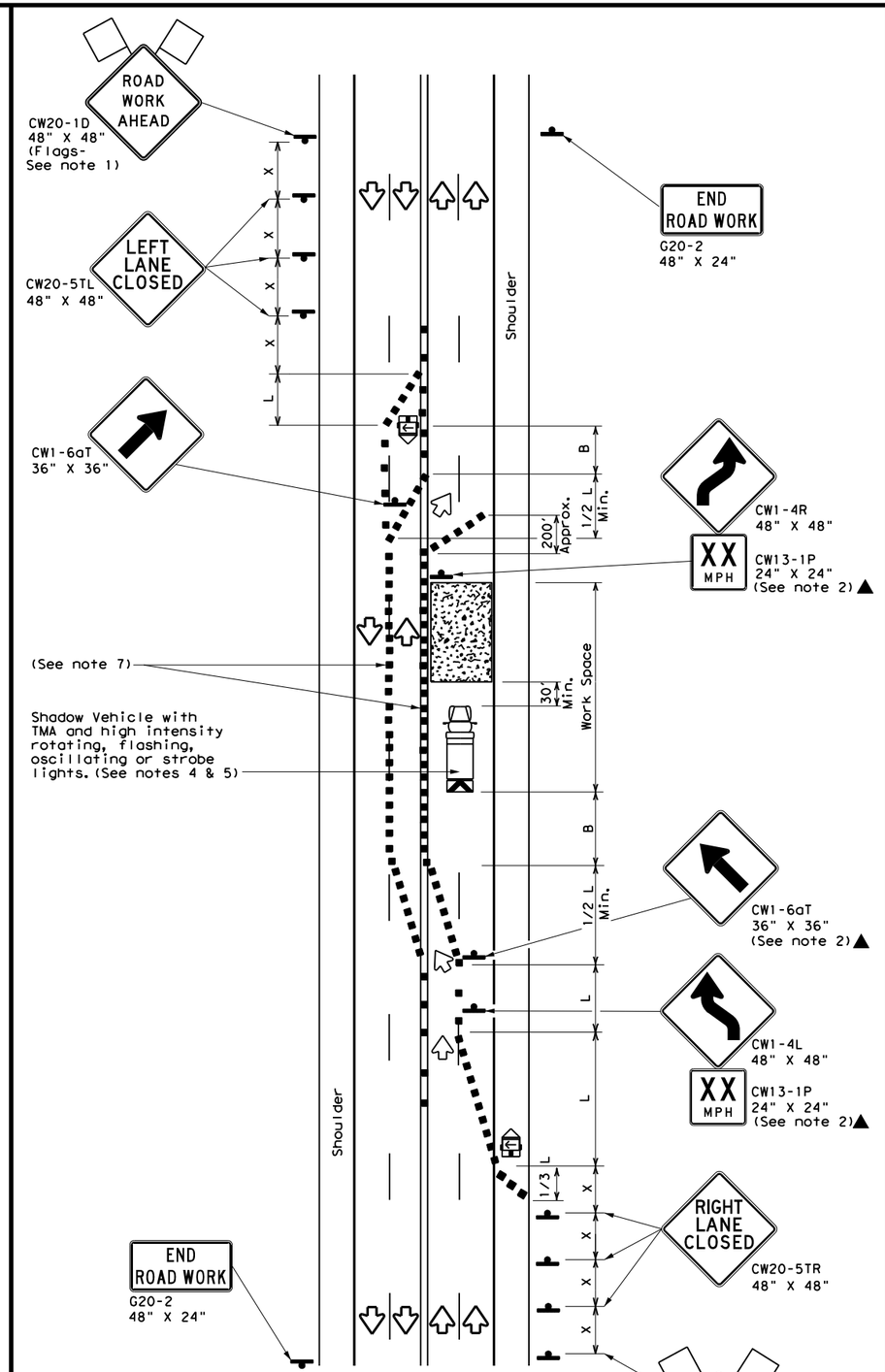

TCP (1-4b)

TWO LANES CLOSED

LEGEND			
	Type 3 Barricade		Channelizing Devices
	Heavy Work Vehicle		Truck Mounted Attenuator (TMA)
	Trailer Mounted Flashing Arrow Board	M	Portable Changeable Message Sign (PCMS)
	Sign		Traffic Flow
	Flag		Flagger

Posted Speed *	Formula	Minimum Desirable Taper Lengths ** 10' Offset	11' Offset	12' Offset	Suggested Maximum Spacing of Channelizing Devices On a Taper	On a Tangent	Minimum Sign Spacing "X" Distance	Suggested Longitudinal Buffer Space "B"
30	$L = \frac{WS^2}{60}$	150'	165'	180'	30'	60'	120'	90'
35		205'	225'	245'	35'	70'	160'	120'
40		265'	295'	320'	40'	80'	240'	155'
45	L = WS	450'	495'	540'	45'	90'	320'	195'
50		500'	550'	600'	50'	100'	400'	240'
55		550'	605'	660'	55'	110'	500'	295'
60		600'	660'	720'	60'	120'	600'	350'
65		650'	715'	780'	65'	130'	700'	410'
70		700'	770'	840'	70'	140'	800'	475'
75		750'	825'	900'	75'	150'	900'	540'

* Conventional Roads Only
** Taper lengths have been rounded off.
L=Length of Taper(FT) W=Width of Offset(FT) S=Posted Speed(MPH)

TYPICAL USAGE				
MOBILE	SHORT DURATION	SHORT TERM STATIONARY	INTERMEDIATE TERM STATIONARY	LONG TERM STATIONARY
	✓	✓		

GENERAL NOTES

1. Flags attached to signs where shown are REQUIRED.
2. All traffic control devices illustrated are REQUIRED, except those denoted with the triangle symbol may be omitted when stated elsewhere in the plans, or for routine maintenance work, when approved by the Engineer.
3. The CW20-1D "ROAD WORK AHEAD" sign may be repeated if the visibility of the work zone is less than 1500 feet.
4. A Shadow Vehicle with a TMA should be used anytime it can be positioned 30 to 100 feet in advance of the area of crew exposure without adversely affecting the performance or quality of the work. If workers are no longer present but road or work conditions require the traffic control to remain in place, Type 3 Barricades or other channelizing devices may be substituted for the Shadow Vehicle and TMA.
5. Additional Shadow Vehicles with TMAs may be positioned off the paved surface, next to those shown in order to protect wider work spaces.

TCP (1-4a)

6. If this TCP is used for a left lane closure , CW20-5TL "LEFT LANE CLOSED" signs shall be used and channelizing devices shall be placed on the centerline where needed to protect the work space from opposing traffic with the arrow panel placed in the closed lane near the end of the merging taper.

TCP (1-4b)

7. Where traffic is directed over a yellow centerline, channelizing devices which separate two-way traffic should be spaced on tapers at 20' or 15' if posted speeds are 35 mph or slower, and for tangent sections, at 1/2S where S is the speed in mph. This tighter device spacing is intended for the areas of conflicting markings, not the entire work zone.

Texas Department of Transportation — Traffic Operations Division Standard

TRAFFIC CONTROL PLAN LANE CLOSURES ON MULTILANE CONVENTIONAL ROADS

TCP(1-4)-18

FILE: tcp1-4-18.dgn	DN:	CK:	DW:	CK:
©TxDOT December 1985	CONT	SECT	JOB	HIGHWAY
REVISIONS 2-94 4-98 8-95 2-12 1-97 2-18	0231	03	156	IH-14
	DIST		COUNTY	SHEET NO.
	WACO		BELL	23

DATE: 7/11/2025 4:31:09 PM
FILE: c:\txdot\pw_online\txdot3\patrick.jalufka\d0807940\tcp1-4-18.dgn

DISCLAIMER:
The use of this standard is governed by the "Texas Engineering Practice Act". No warranty of any kind is made by TxDOT for any purpose whatsoever. TxDOT assumes no responsibility for the conversion of this standard to other formats or for incorrect results or damages resulting from its use.

DATE: 7/11/2025 4:31:22 PM
FILE: c:\txdot\pw_online\txdot3\patrick.jalufka\d0807940\tcp1-5-18.dgn

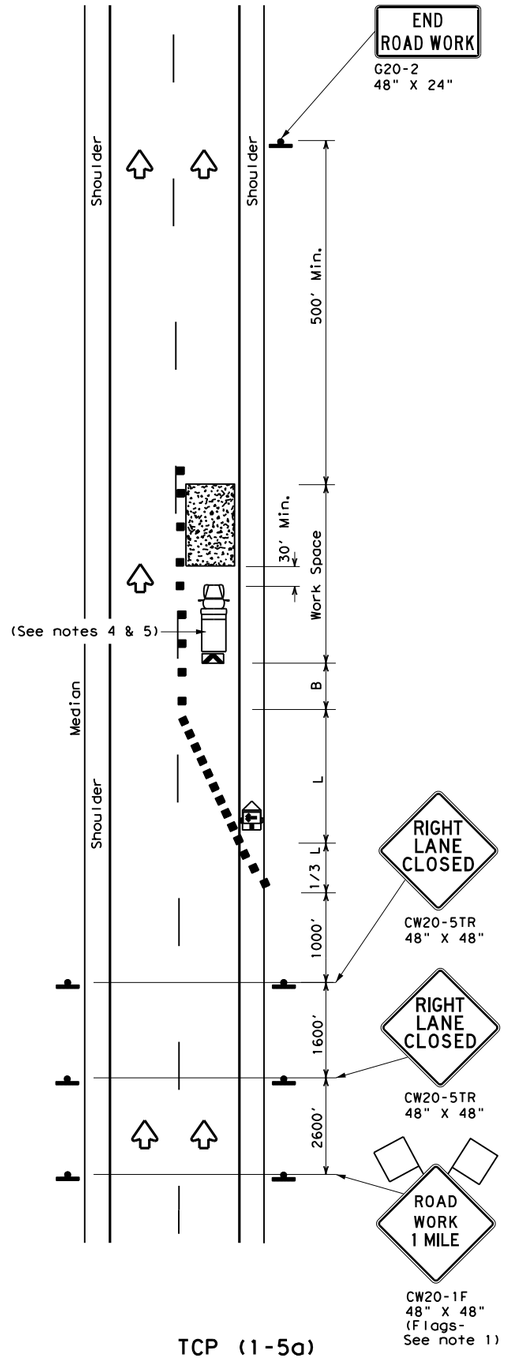

TCP (1-5a)

ONE LANE CLOSURE

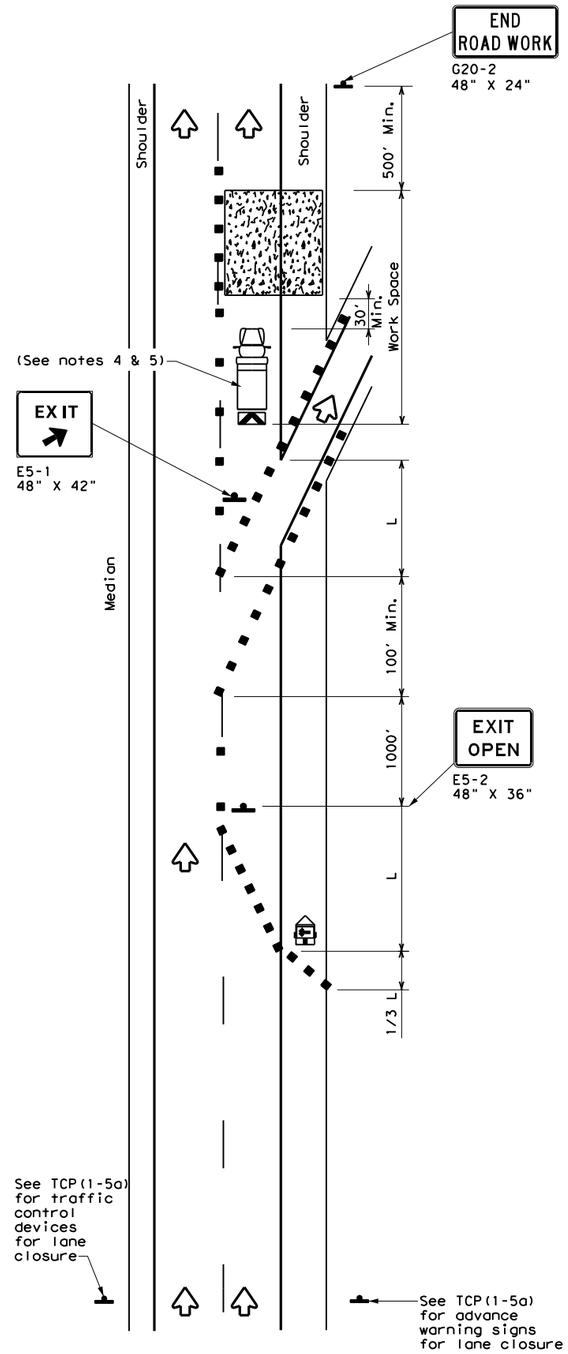

TCP (1-5b)

LANE CLOSURE NEAR EXIT RAMPS

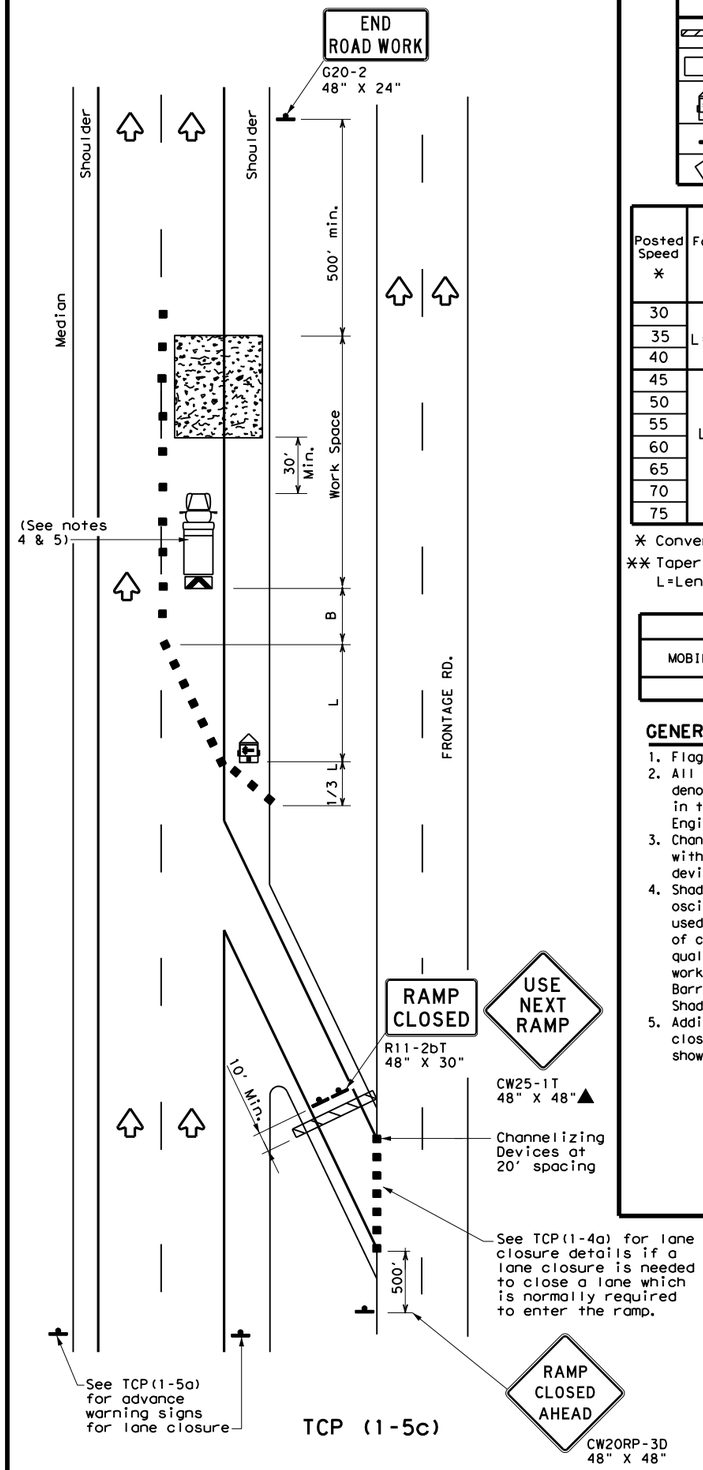

TCP (1-5c)

LANE CLOSURE NEAR ENTRANCE RAMPS

LEGEND

	Type 3 Barricade		Channelizing Devices
	Heavy Work Vehicle		Truck Mounted Attenuator (TMA)
	Trailer Mounted Flashing Arrow Board	M	Portable Changeable Message Sign (PCMS)
	Sign		Traffic Flow
	Flag		Flagger

Posted Speed *	Formula	Minimum Desirable Taper Lengths **			Suggested Maximum Spacing of Channelizing Devices		Minimum Sign Spacing "X" Distance	Suggested Longitudinal Buffer Space "B"
		10' Offset	11' Offset	12' Offset	On a Taper	On a Tangent		
30	$L = \frac{WS^2}{60}$	150'	165'	180'	30'	60'	120'	90'
35		205'	225'	245'	35'	70'	160'	120'
40		265'	295'	320'	40'	80'	240'	155'
45	L = WS	450'	495'	540'	45'	90'	320'	195'
50		500'	550'	600'	50'	100'	400'	240'
55		550'	605'	660'	55'	110'	500'	295'
60		600'	660'	720'	60'	120'	600'	350'
65		650'	715'	780'	65'	130'	700'	410'
70		700'	770'	840'	70'	140'	800'	475'
75		750'	825'	900'	75'	150'	900'	540'

* Conventional Roads Only

** Taper lengths have been rounded off.
L=Length of Taper(FT) W=Width of Offset(FT) S=Posted Speed(MPH)

TYPICAL USAGE

MOBILE	SHORT DURATION	SHORT TERM STATIONARY	INTERMEDIATE TERM STATIONARY	LONG TERM STATIONARY
		✓		

GENERAL NOTES

1. Flags attached to signs where shown, are REQUIRED.
2. All traffic control devices illustrated are REQUIRED, except those denoted with the triangle symbol may be omitted when stated elsewhere in the plans, or for routine maintenance work, when approved by the Engineer.
3. Channelizing devices used to close lanes may be supplemented with the Chevron Alignment Sign placed on every other channelizing device. Chevrons may be attached to plastic drums as per BC Standards.
4. Shadow Vehicle with TMA and high intensity rotating, flashing, oscillating or strobe lights. A Shadow Vehicle with a TMA should be used anytime it can be positioned 30 to 100 feet in advance of the area of crew exposure without adversely affecting the performance or quality of the work. If workers are no longer present but road or work conditions require the traffic control to remain in place, Type 3 Barricades or other channelizing devices may be substituted for the Shadow Vehicle and TMA.
5. Additional Shadow Vehicles with TMAs may be positioned in each closed lane, on the shoulder or off the paved surface, next to those shown in order to protect a wider work space.

Texas Department of Transportation

Traffic Operations Division Standard

TRAFFIC CONTROL PLAN LANE CLOSURES FOR DIVIDED HIGHWAYS

TCP(1-5)-18

FILE: tcp1-5-18.dgn	DN:	CK:	DW:	CK:
©TxDOT February 2012	CONT	SECT	JOB	HIGHWAY
REVISIONS 2-18	0231	03	156	IH-14
	DIST		COUNTY	SHEET NO.
	WACO		BELL	24

DISCLAIMER:
The use of this standard is governed by the "Texas Engineering Practice Act". No warranty of any kind is made by TxDOT for any purpose whatsoever. TxDOT assumes no responsibility for the conversion of this standard to other formats or for incorrect results or damages resulting from its use.

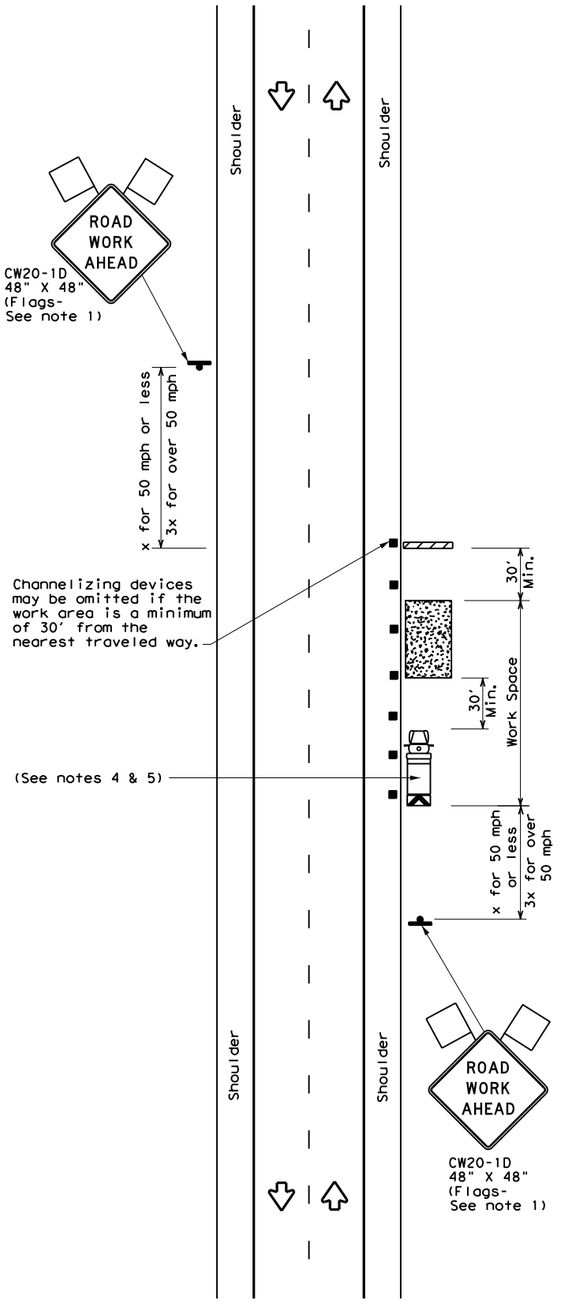

TCP (2-1a)

WORK SPACE NEAR SHOULDER

Conventional Roads

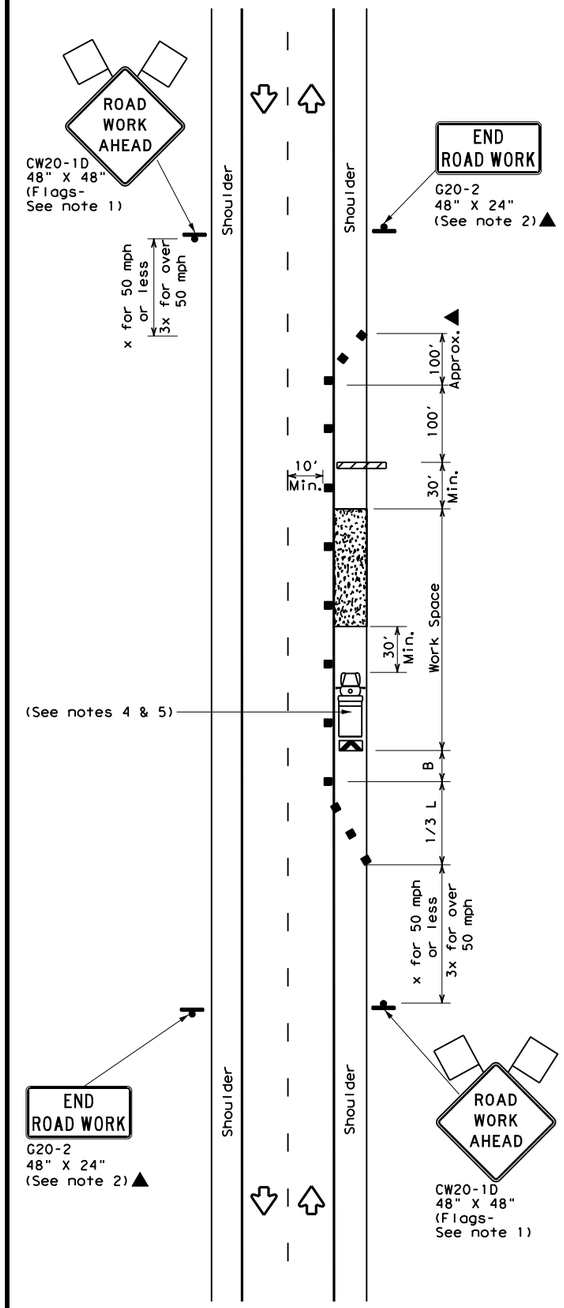

TCP (2-1b)

WORK SPACE ON SHOULDER

Conventional Roads

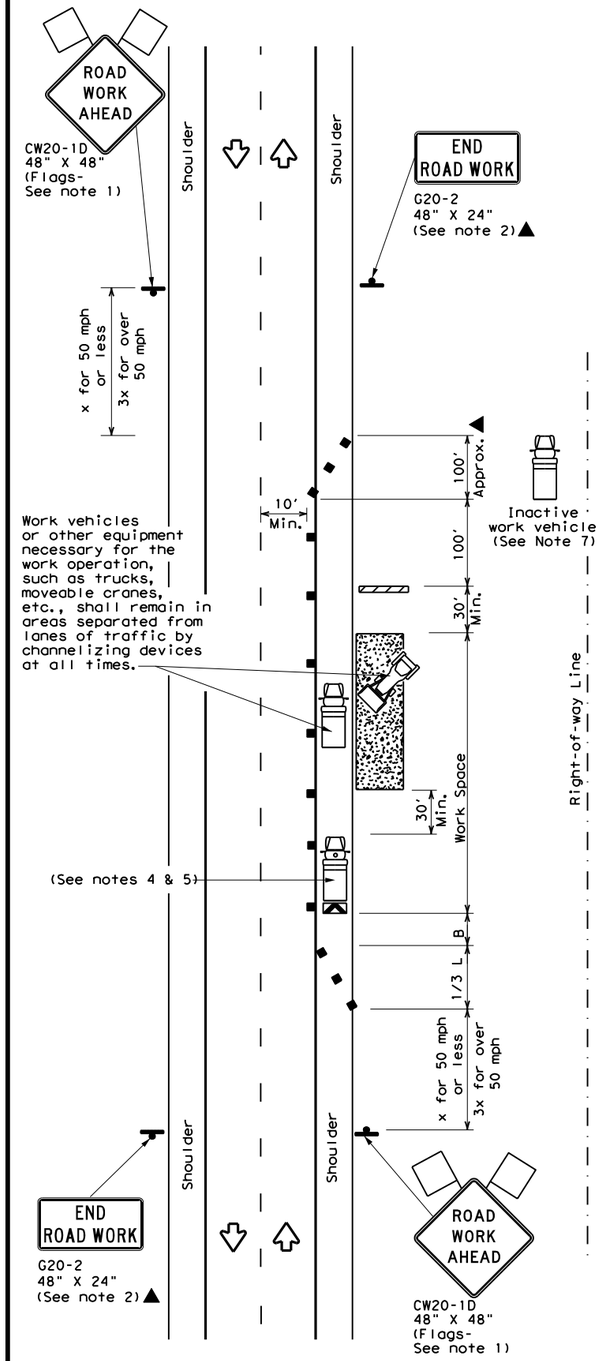

TCP (2-1c)

WORK VEHICLES ON SHOULDER

Conventional Roads

LEGEND			
	Type 3 Barricade		Channelizing Devices
	Heavy Work Vehicle		Truck Mounted Attenuator (TMA)
	Trailer Mounted Flashing Arrow Board		Portable Changeable Message Sign (PCMS)
	Sign		Traffic Flow
	Flag		Flagger

Posted Speed *	Formula	Minimum Desirable Taper Lengths **			Suggested Maximum Spacing of Channelizing Devices		Minimum Sign Spacing "X" Distance	Suggested Longitudinal Buffer Space "B"
		10' Offset	11' Offset	12' Offset	On a Taper	On a Tangent		
30	$L = \frac{WS^2}{60}$	150'	165'	180'	30'	60'	120'	90'
35		205'	225'	245'	35'	70'	160'	120'
40		265'	295'	320'	40'	80'	240'	155'
45	L = WS	450'	495'	540'	45'	90'	320'	195'
50		500'	550'	600'	50'	100'	400'	240'
55		550'	605'	660'	55'	110'	500'	295'
60		600'	660'	720'	60'	120'	600'	350'
65		650'	715'	780'	65'	130'	700'	410'
70		700'	770'	840'	70'	140'	800'	475'
75		750'	825'	900'	75'	150'	900'	540'

* Conventional Roads Only

** Taper lengths have been rounded off.
L=Length of Taper(FT) W=Width of Offset(FT) S=Posted Speed(MPH)

TYPICAL USAGE				
MOBILE	SHORT DURATION	SHORT TERM STATIONARY	INTERMEDIATE TERM STATIONARY	LONG TERM STATIONARY
	✓	✓	✓	✓

GENERAL NOTES

1. Flags attached to signs where shown, are REQUIRED.
2. All traffic control devices illustrated are REQUIRED, except those denoted with the triangle symbol may be omitted when stated in the plans, or for routine maintenance work, when approved by the Engineer.
3. Stockpiled material should be placed a minimum of 30 feet from nearest traveled way.
4. Shadow Vehicle with TMA and high intensity rotating, flashing, oscillating or strobe lights. A Shadow Vehicle with a TMA should be used anytime it can be positioned 30 to 100 feet in advance of the area of crew exposure without adversely affecting the performance or quality of the work. If workers are no longer present but road or work conditions require the traffic control to remain in place, Type 3 Barricades or other channelizing devices may be substituted for the Shadow Vehicle and TMA.
5. Additional Shadow Vehicles with TMAs may be positioned off the paved surface, next to those shown in order to protect a wider work space.
6. See TCP(5-1) for shoulder work on divided highways, expressways and freeways.
7. Inactive work vehicles or other equipment should be parked near the right-of-way line and not parked on the paved shoulder.
8. CW21-5 "SHOULDER WORK" signs may be used in place of CW20-1D "ROAD WORK AHEAD" signs for shoulder work on conventional roadways.

Texas Department of Transportation

Traffic Operations Division Standard

TRAFFIC CONTROL PLAN CONVENTIONAL ROAD SHOULDER WORK

TCP(2-1)-18

FILE: tcp2-1-18.dgn	DN:	CK:	DW:	CK:
©TxDOT December 1985	CONT	SECT	JOB	HIGHWAY
REVISIONS	0231	03	156	IH-14
2-94 4-98	DIST		COUNTY	SHEET NO.
8-95 2-12	WACO		BELL	25
1-97 2-18				

DATE: 7/11/2025 4:31:36 PM
FILE: c:\txdot\pw_online\txdot3\patrick.jalufka\d0807940\tcp2-1-18.dgn

DISCLAIMER:
The use of this standard is governed by the "Texas Engineering Practice Act". No warranty of any kind is made by TxDOT for any purpose whatsoever. TxDOT assumes no responsibility for the conversion of this standard to other formats or for incorrect results or damages resulting from its use.

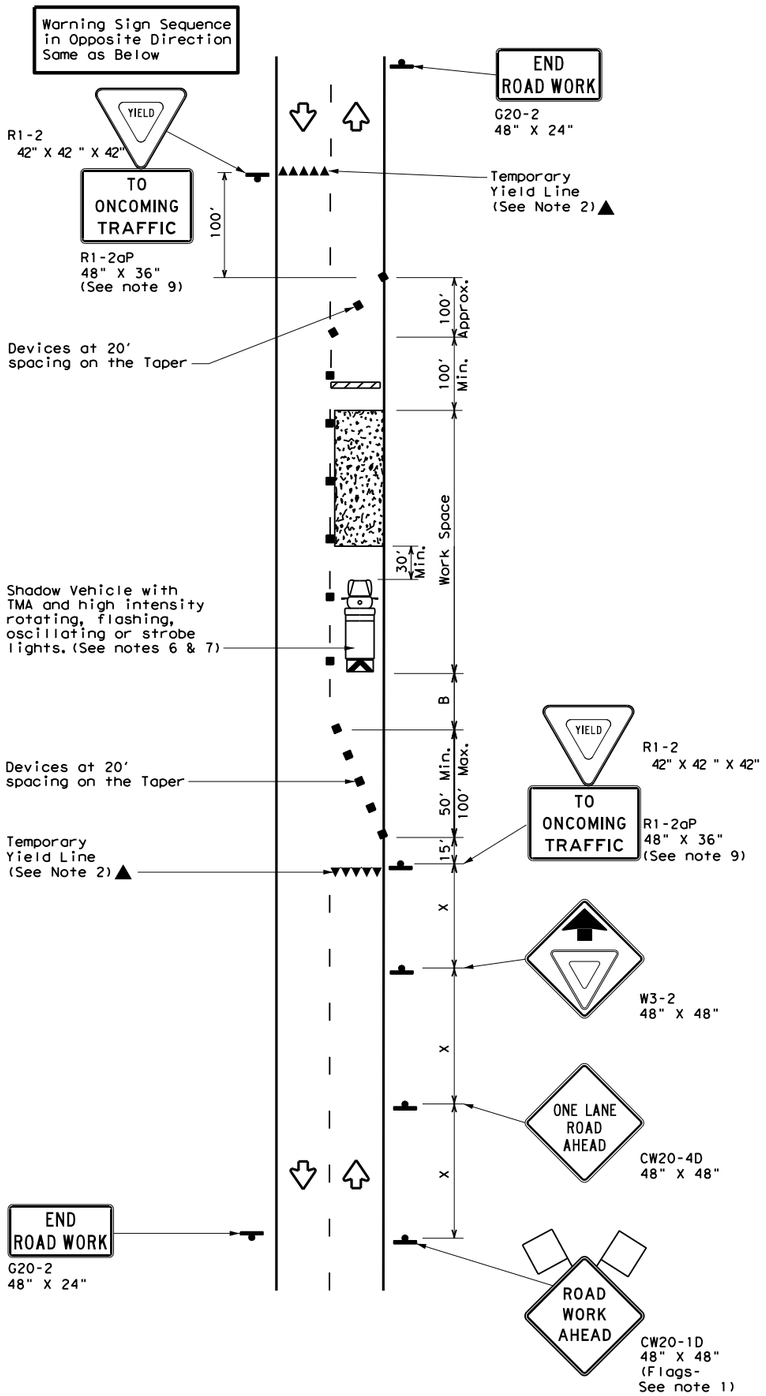

TCP (2-2a)

2-LANE ROADWAY WITHOUT PAVED SHOULDERS

ONE LANE TWO-WAY

CONTROL WITH YIELD SIGNS

(Less than 2000 ADT - See Note 9)

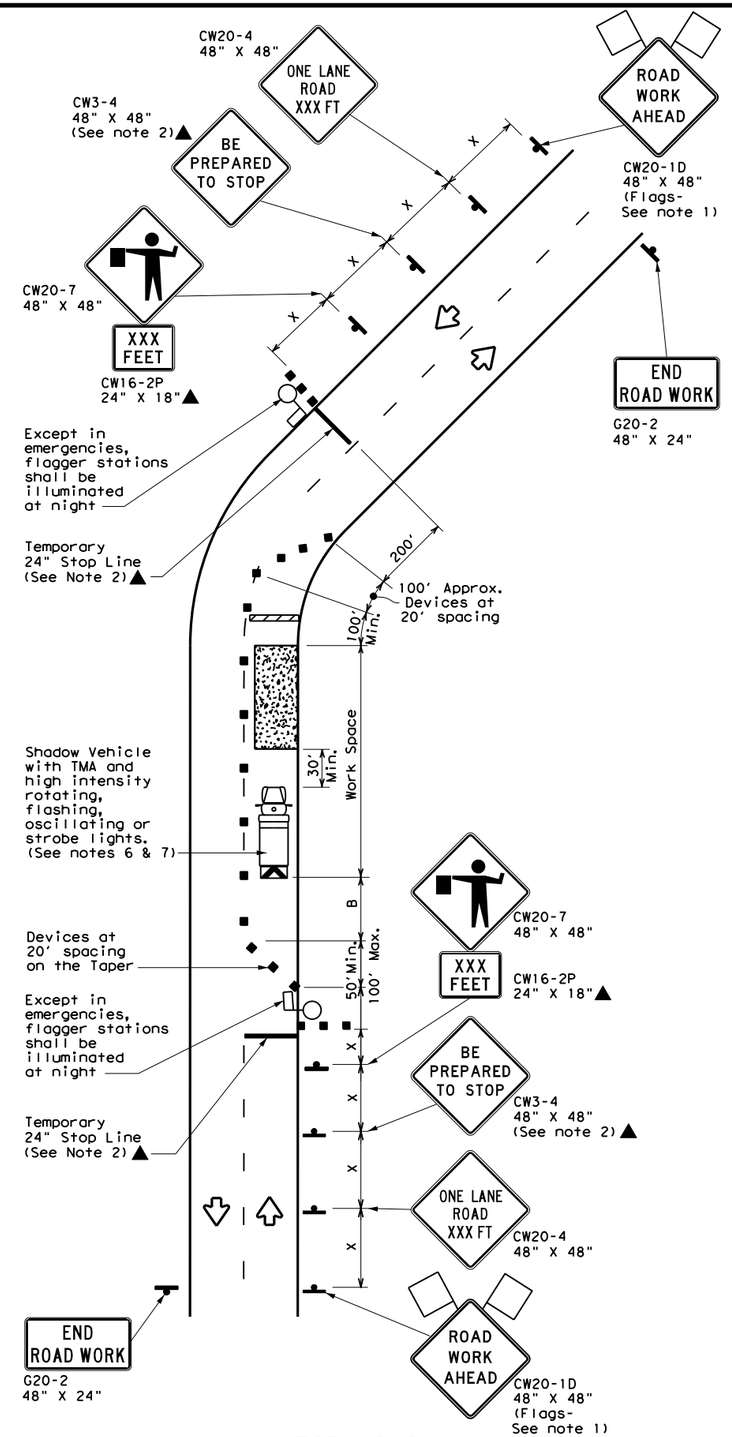

TCP (2-2b)

2-LANE ROADWAY WITHOUT PAVED SHOULDERS

ONE LANE TWO-WAY

CONTROL WITH FLAGGERS

LEGEND

	Type 3 Barricade		Channelizing Devices
	Heavy Work Vehicle		Truck Mounted Attenuator (TMA)
	Trailer Mounted Flashing Arrow Board	M	Portable Changeable Message Sign (PCMS)
	Sign		Traffic Flow
	Flag		Flagger

Posted Speed *	Formula	Minimum Desirable Taper Lengths **			Suggested Maximum Spacing of Channelizing Devices		Minimum Sign Spacing "X" Distance	Suggested Longitudinal Buffer Space "B"	Stopping Sight Distance
		10' Offset	11' Offset	12' Offset	On a Taper	On a Tangent			
30	$L = \frac{WS^2}{60}$	150'	165'	180'	30'	60'	120'	90'	200'
35		205'	225'	245'	35'	70'	160'	120'	250'
40		265'	295'	320'	40'	80'	240'	155'	305'
45	L = WS	450'	495'	540'	45'	90'	320'	195'	360'
50		500'	550'	600'	50'	100'	400'	240'	425'
55		550'	605'	660'	55'	110'	500'	295'	495'
60		600'	660'	720'	60'	120'	600'	350'	570'
65		650'	715'	780'	65'	130'	700'	410'	645'
70		700'	770'	840'	70'	140'	800'	475'	730'
75		750'	825'	900'	75'	150'	900'	540'	820'

* Conventional Roads Only

** Taper lengths have been rounded off.

L=Length of Taper(FT) W=Width of Offset(FT) S=Posted Speed(MPH)

TYPICAL USAGE

MOBILE	SHORT DURATION	SHORT TERM STATIONARY	INTERMEDIATE TERM STATIONARY	LONG TERM STATIONARY
	✓	✓	✓	

GENERAL NOTES

1. Flags attached to signs where shown, are REQUIRED.
2. All traffic control devices illustrated are REQUIRED, except those denoted with the triangle symbol may be omitted when stated elsewhere in the plans, or for routine maintenance work, when approved by the Engineer.
3. The CW3-4 "BE PREPARED TO STOP" sign may be installed after the CW20-4 "ONE LANE ROAD XXX FT" sign, but proper sign spacing shall be maintained.
4. Flaggers should use two-way radios or other methods of communication to control traffic.
5. Length of work space should be based on the ability of flaggers to communicate.
6. A Shadow Vehicle with a TMA should be used anytime it can be positioned 30 to 100 feet in advance of the area of crew exposure without adversely affecting the performance or quality of the work. If workers are no longer present but road or work conditions require the traffic control to remain in place, Type 3 Barricades or other channelizing devices may be substituted for the Shadow Vehicle and TMA.
7. Additional Shadow Vehicles with TMAs may be positioned off the paved surface, next to those shown in order to protect a wider work space.

TCP (2-2a)

8. The R1-2 "YIELD" sign traffic control may be used on projects with approaches that have adequate sight distance. For projects in urban areas, work space should be no longer than one half city block. In rural areas, roadways with less than 2000 ADT, work space should be no longer than 400 feet.
9. The R1-2aP "YIELD TO ONCOMING TRAFFIC" sign shall be placed on a support at a 7 foot minimum mounting height.

TCP (2-2b)

10. Channelizing devices on the center line may be omitted when a pilot car is leading traffic and approved by the Engineer.
11. If the work space is located near a horizontal or vertical curve, the buffer distances should be increased in order to maintain stopping sight distance to the flagger and a queue of stopped vehicles. (See table above).
12. Flaggers should use 24" STOP/SLOW paddles to control traffic. Flags should be limited to emergency situtations.

Texas Department of Transportation

Traffic Operations Division Standard

TRAFFIC CONTROL PLAN ONE-LANE TWO-WAY TRAFFIC CONTROL

TCP(2-2)-18

FILE: tcp2-2-18.dgn	DN:	CK:	DW:	CK:
©TxDOT December 1985	CONT	SECT	JOB	HIGHWAY
REVISIONS	0231	03	156	IH-14
8-95 3-03	DIST		COUNTY	SHEET NO.
1-97 2-12	WACO		BELL	26
4-98 2-18				

DATE: 7/11/2025 4:31:49 PM
FILE: c:\txdot\pw_online\txdot3\patrick.jalufka\d0807940\tcp2-2-18.dgn

DISCLAIMER:
The use of this standard is governed by the "Texas Engineering Practice Act". No warranty of any kind is made by TxDOT for any purpose whatsoever. TxDOT assumes no responsibility for the conversion of this standard to other formats or for incorrect results or damages resulting from its use.

DATE: 7/11/2025 4:32:01 PM
FILE: c:\txdot\pw_online\txdot3\patrick.jalufka\d0807940\tcp2-3-23.dgn

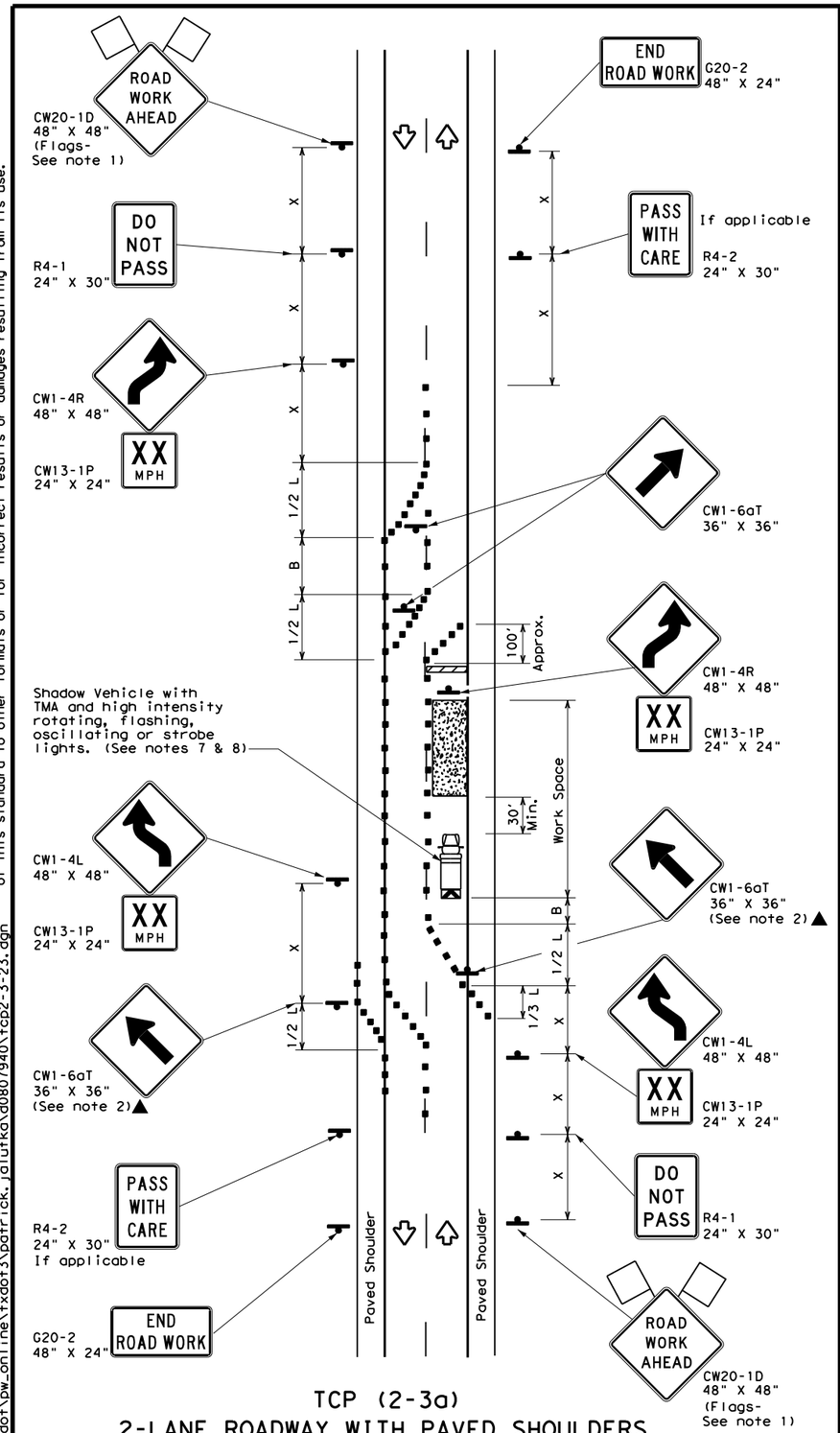

TCP (2-3a)
2-LANE ROADWAY WITH PAVED SHOULDERS

ONE LANE CLOSED
ADEQUATE FIELD OF VIEW

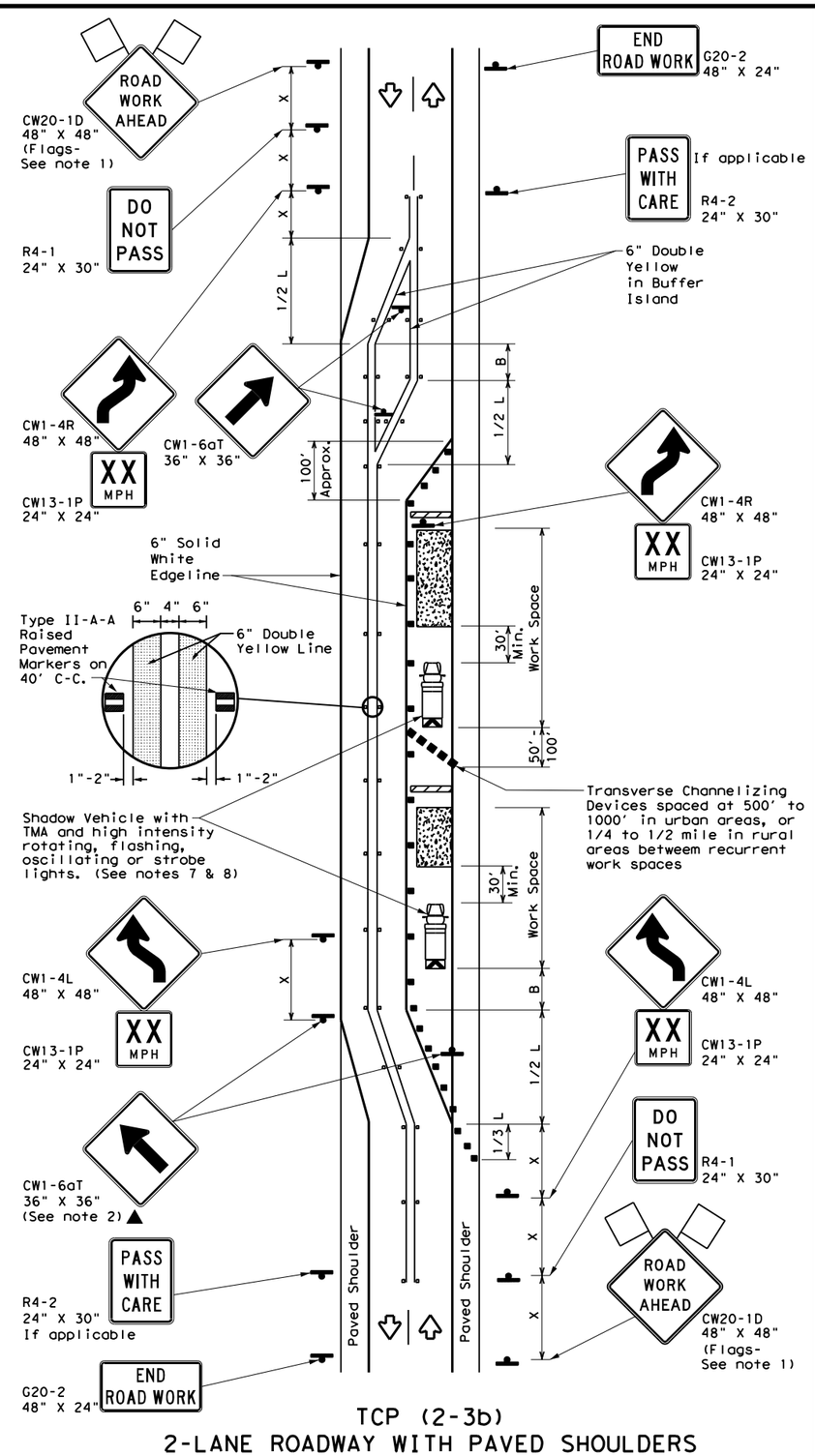

TCP (2-3b)
2-LANE ROADWAY WITH PAVED SHOULDERS

ONE LANE CLOSED
INADEQUATE FIELD OF VIEW

LEGEND

	Type 3 Barricade		Channelizing Devices
	Heavy Work Vehicle		Truck Mounted Attenuator (TMA)
	Trailer Mounted Flashing Arrow Board		Raised Pavement Markers Ty II-AA
	Sign		Traffic Flow
	Flag		Flagger

Posted Speed *	Formula	Minimum Desirable Taper Lengths **			Suggested Maximum Spacing of Channelizing Devices		Minimum Sign Spacing "X" Distance	Suggested Longitudinal Buffer Space "B"
		10' Offset	11' Offset	12' Offset	On a Taper	On a Tangent		
30	$L = \frac{WS^2}{60}$	150'	165'	180'	30'	60'	120'	90'
35		205'	225'	245'	35'	70'	160'	120'
40		265'	295'	320'	40'	80'	240'	155'
45	L = WS	450'	495'	540'	45'	90'	320'	195'
50		500'	550'	600'	50'	100'	400'	240'
55		550'	605'	660'	55'	110'	500'	295'
60		600'	660'	720'	60'	120'	600'	350'
65		650'	715'	780'	65'	130'	700'	410'
70		700'	770'	840'	70'	140'	800'	475'
75		750'	825'	900'	75'	150'	900'	540'

* Conventional Roads Only
** Taper lengths have been rounded off.
L=Length of Taper(FT) W=Width of Offset(FT) S=Posted Speed(MPH)

TYPICAL USAGE

MOBILE	SHORT DURATION	SHORT TERM STATIONARY	INTERMEDIATE TERM STATIONARY	LONG TERM STATIONARY TCP(2-3b) ONLY
			✓	✓

GENERAL NOTES

1. Flags attached to signs where shown, are REQUIRED.
2. All traffic control devices illustrated are REQUIRED, except those denoted with the triangle symbol may be omitted when stated elsewhere in the plans, or for routine maintenance work, when approved by the Engineer.
3. When work space will be in place less than three days existing pavement markings may remain in place. Channelizing devices shall be used to separate traffic.
4. Flagger control should NOT be used unless roadway conditions or heavy traffic volume require additional emphasis to safely control traffic. Flagger should be positioned at end of traffic queue.
5. The R4-1 "DO NOT PASS," R4-2 " PASS WITH CARE" and construction regulatory speed zone signs may be installed within CW20-1D "ROAD WORK AHEAD" signs. Proper spacing of signs shall be maintained.
6. Conflicting pavement marking shall be removed for long term projects.
7. A Shadow Vehicle with a TMA should be used anytime it can be positioned 30 to 100 feet in advance of the area of crew exposure without adversely affecting the performance or quality of the work. If workers are no longer present but road or work conditions require the traffic control to remain in place, Type 3 Barricades or other channelizing devices may be substituted.
8. Additional Shadow Vehicles with TMAs may be positioned off the paved surface, next to those shown in order to protect a wider work space.

TCP (2-3a)

9. Conflicting pavement markings shall be removed for long-term projects. For shorter durations where traffic is directed over a yellow centerline, channelizing devices which separate two-way traffic should be spaced on tapers at 20' or 15' if posted speeds are 35 mph or slower, and for tangent sections, at 1/2(S) where S is the speed in mph. This tighter device spacing is intended for the area of the conflicting markings, not the entire work zone.

Texas Department of Transportation — Traffic Safety Division Standard

TRAFFIC CONTROL PLAN TRAFFIC SHIFTS ON TWO-LANE ROADS

TCP(2-3)-23

FILE: tcp(2-3)-23.dgn	DN:	CK:	DW:	CK:
© TxDOT April 2023	CONT	SECT	JOB	HIGHWAY
REVISIONS 12-85 4-98 2-18 8-95 3-03 4-23 1-97 2-12	0231	03	156	IH-14
	DIST		COUNTY	SHEET NO.
	WACO		BELL	27

DISCLAIMER:
The use of this standard is governed by the "Texas Engineering Practice Act". No warranty of any kind is made by TxDOT for any purpose whatsoever. TxDOT assumes no responsibility for the conversion of this standard to other formats or for incorrect results or damages resulting from its use.

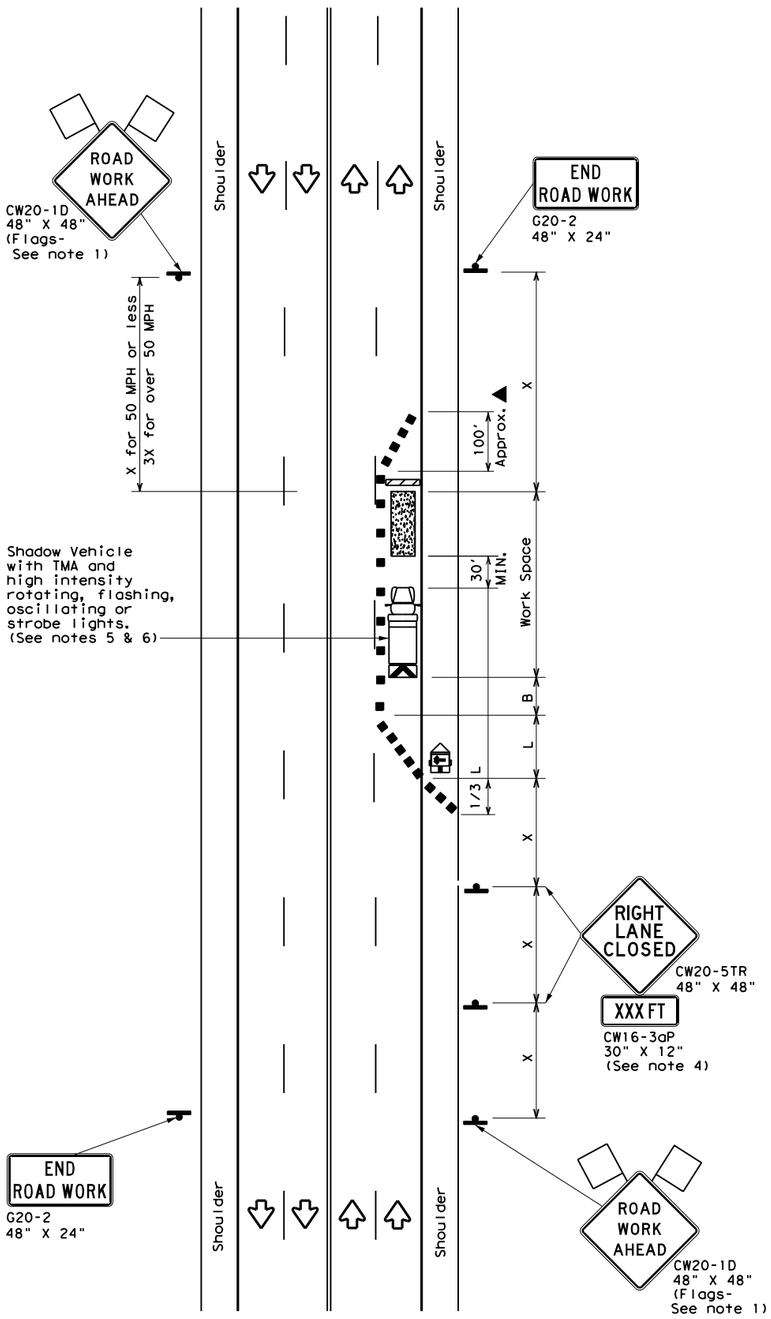

TCP (2-4a)

ONE LANE CLOSED

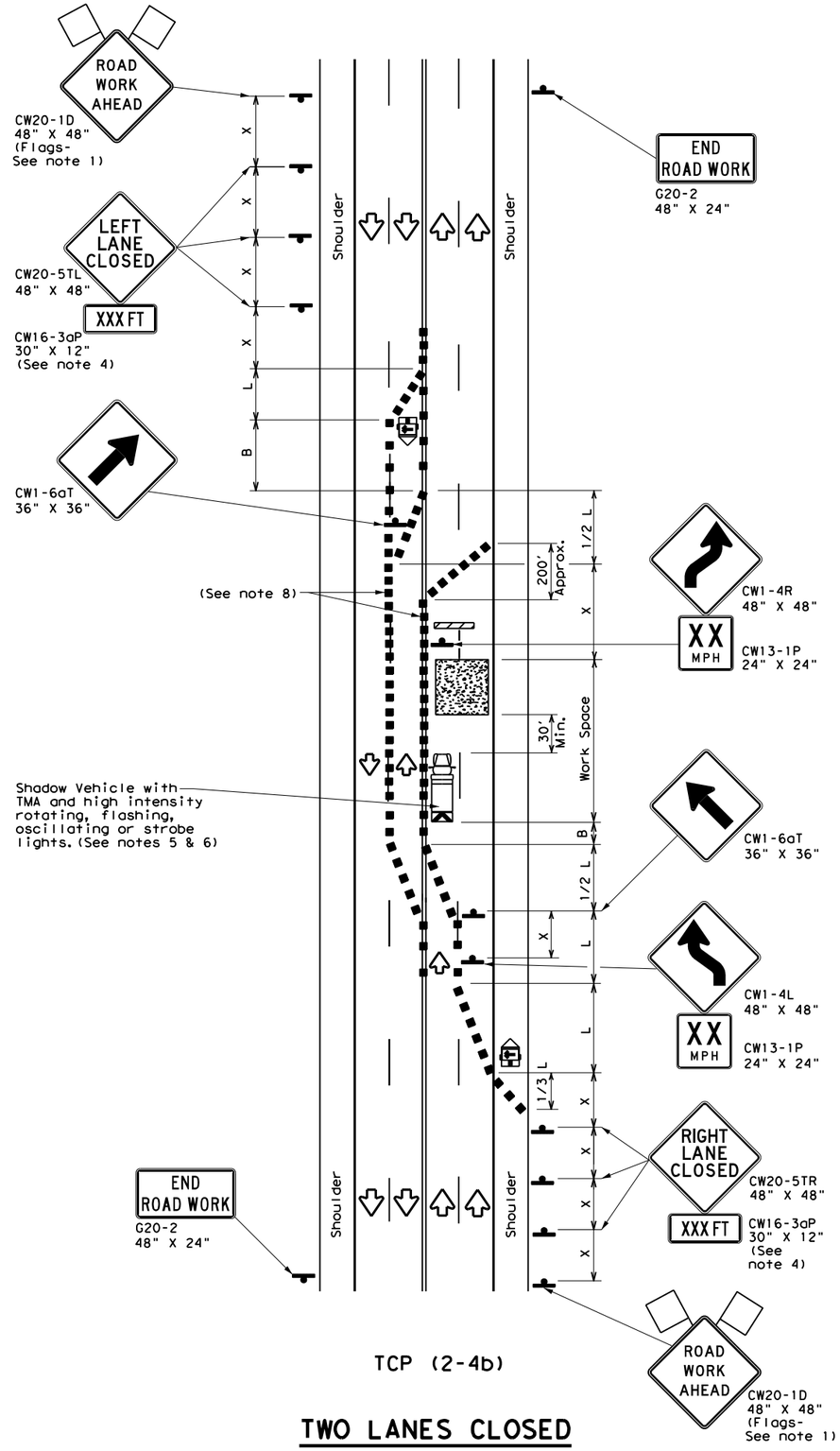

TCP (2-4b)

TWO LANES CLOSED

LEGEND			
	Type 3 Barricade		Channelizing Devices
	Heavy Work Vehicle		Truck Mounted Attenuator (TMA)
	Trailer Mounted Flashing Arrow Board		Portable Changeable Message Sign (PCMS)
	Sign		Traffic Flow
	Flag		Flagger

Posted Speed *	Formula	Minimum Desirable Taper Lengths **			Suggested Maximum Spacing of Channelizing Devices		Minimum Sign Spacing "X" Distance	Suggested Longitudinal Buffer Space "B"
		10' Offset	11' Offset	12' Offset	On a Taper	On a Tangent		
30	$L = \frac{WS^2}{60}$	150'	165'	180'	30'	60'	120'	90'
35		205'	225'	245'	35'	70'	160'	120'
40		265'	295'	320'	40'	80'	240'	155'
45	L = WS	450'	495'	540'	45'	90'	320'	195'
50		500'	550'	600'	50'	100'	400'	240'
55		550'	605'	660'	55'	110'	500'	295'
60		600'	660'	720'	60'	120'	600'	350'
65		650'	715'	780'	65'	130'	700'	410'
70		700'	770'	840'	70'	140'	800'	475'
75		750'	825'	900'	75'	150'	900'	540'

* Conventional Roads Only

** Taper lengths have been rounded off.
L=Length of Taper(FT) W=Width of Offset(FT) S=Posted Speed(MPH)

TYPICAL USAGE				
MOBILE	SHORT DURATION	SHORT TERM STATIONARY	INTERMEDIATE TERM STATIONARY	LONG TERM STATIONARY
		✓	✓	

GENERAL NOTES

1. Flags attached to signs where shown, are REQUIRED.
2. All traffic control devices illustrated are REQUIRED, except those denoted with the triangle symbol may be omitted when stated elsewhere in the plans, or for routine maintenance work, when approved by the Engineer.
3. The downstream taper is optional. When used, it should be 100 feet minimum length per lane.
4. For short term applications, when post mounted signs are not used, the distance legend may be shown on the sign face rather than on a CW16-3aP supplemental plaque.
5. A Shadow Vehicle with a TMA should be used anytime it can be positioned 30 to 100 feet in advance of the area of crew exposure without adversely affecting the performance or quality of the work. If workers are no longer present but road or work conditions require the traffic control to remain in place, Type 3 Barricades or other channelizing devices may be substituted for the Shadow Vehicle and TMA.
6. Additional Shadow Vehicles with TMAs may be positioned in each closed lane, on the shoulder or off the paved surface, next to those shown in order to protect a wider work space.

TCP (2-4a)

7. If this TCP is used for a left lane closure, CW20-5TL "LEFT LANE CLOSED"signs shall be used and channelizing devices shall be placed on the centerline to protect the work space from opposing traffic with the arrow board placed in the closed lane near the end of the merging taper.

TCP (2-4b)

8. For shorter durations where traffic is directed over a yellow centerline, channelizing devices which separate two-way traffic should be spaced on tapers at 20' or 15' if posted speeds are 35 mph or slower, and for tangent sections, at 1/2(S) where S is the speed in mph. This tighter devices spacing is intended for the area of conflicting markings, not the entire work zone.

Texas Department of Transportation — Traffic Operations Division Standard

TRAFFIC CONTROL PLAN LANE CLOSURES ON MULTILANE CONVENTIONAL ROADS

TCP(2-4)-18

FILE: tcp2-4-18.dgn	DN:	CK:	DW:	CK:
© TxDOT December 1985	CONT	SECT	JOB	HIGHWAY
REVISIONS	0231	03	156	IH-14
8-95 3-03	DIST		COUNTY	SHEET NO.
1-97 2-12	WACO		BELL	28
4-98 2-18				

DATE: 7/11/2025 4:32:16 PM
FILE: c:\txdot\pw_online\txdot3\patrick.jalufka\d0807940\tcp2-4-18.dgn

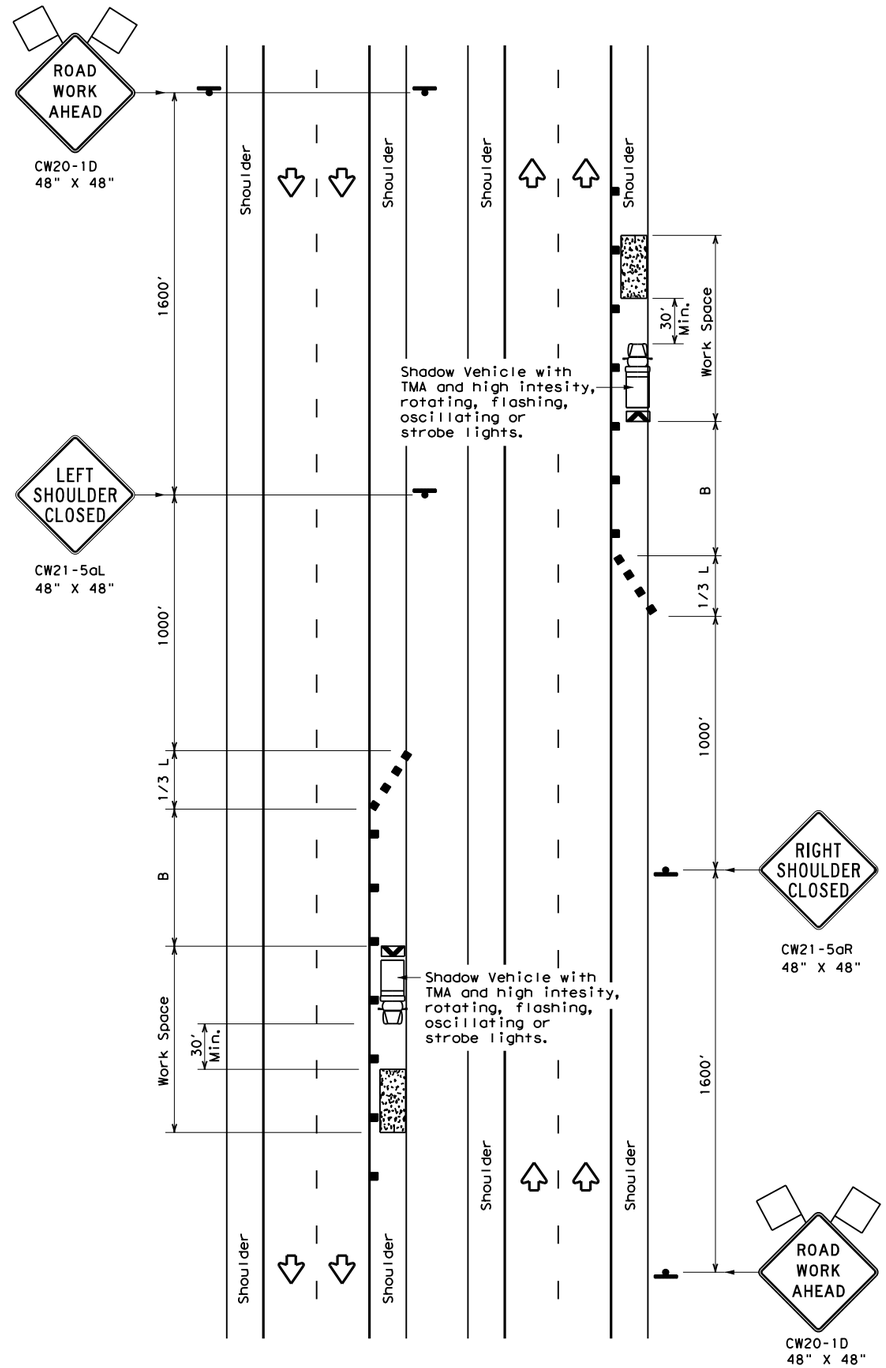

TCP (5-1a)

WORK AREA ON SHOULDER

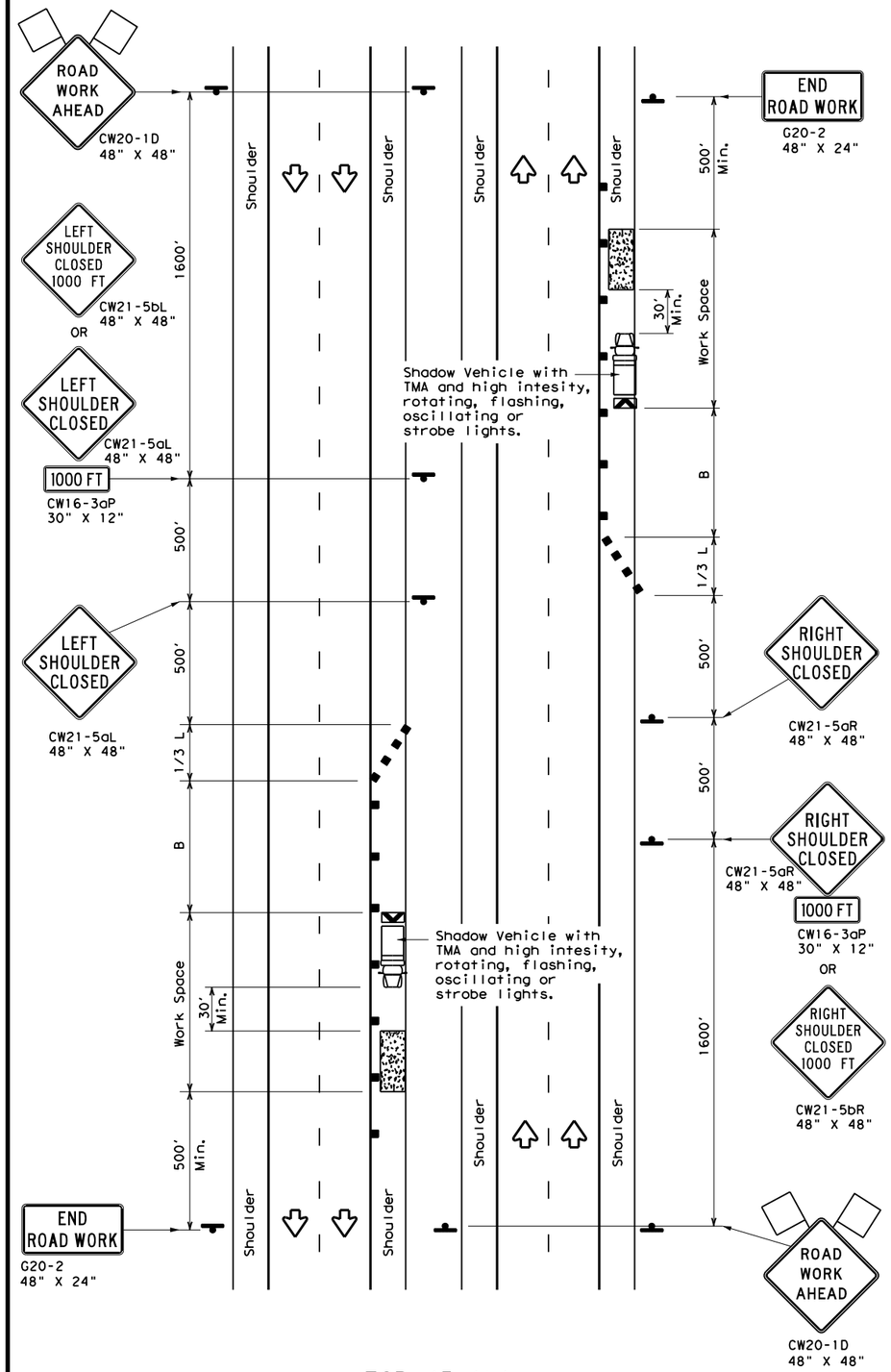

TCP (5-1b)

WORK AREA ON SHOULDER

LEGEND

	Type 3 Barricade		Channelizing Devices
	Heavy Work Vehicle		Truck Mounted Attenuator (TMA)
	Trailer Mounted Flashing Arrow Board		Portable Changeable Message Sign (PCMS)
	Sign		Traffic Flow
	Flag		Flagger

Posted Speed *	Formula	Minimum Desirable Taper Lengths **			Suggested Maximum Spacing of Channelizing Devices		Suggested Longitudinal Buffer Space "B"
		10' Offset	11' Offset	12' Offset	On a Taper	On a Tangent	
30	$L = \frac{WS^2}{60}$	150'	165'	180'	30'	60'	90'
35		205'	225'	245'	35'	70'	120'
40		265'	295'	320'	40'	80'	155'
45	L = WS	450'	495'	540'	45'	90'	195'
50		500'	550'	600'	50'	100'	240'
55		550'	605'	660'	55'	110'	295'
60		600'	660'	720'	60'	120'	350'
65		650'	715'	780'	65'	130'	410'
70		700'	770'	840'	70'	140'	475'
75		750'	825'	900'	75'	150'	540'
80		800'	880'	960'	80'	160'	615'

* Conventional Roads Only

** Taper lengths have been rounded off.

L=Length of Taper(FT) W=Width of Offset(FT) S=Posted Speed(MPH)

TYPICAL USAGE

MOBILE	SHORT DURATION	SHORT TERM STATIONARY	INTERMEDIATE TERM STATIONARY	LONG TERM STATIONARY
	TCP(5-1a)	TCP(5-1b)	TCP(5-1b)	

GENERAL NOTES

1. A Shadow Vehicle with a TMA should be used anytime it can be positioned 30' to 100' in advance of the area of crew exposure without adversely effecting the performance or quality of the work. Type 3 barricades or drums may be substituted when workers on foot are no longer present when approved by the Engineer.
2. 28" tall or taller one-piece cones will be allowed only for Short Duration or Short Term stationary operations when workers are present to maintain the devices upright and in proper location. Intermediate Term stationary work areas should use Drums, Vertical Panels or 42" tall two-piece cones.

Texas Department of Transportation

Traffic Operations Division Standard

TRAFFIC CONTROL PLAN SHOULDER WORK FOR FREEWAYS / EXPRESSWAYS

TCP(5-1)-18

FILE: tcp5-1-18.dgn	DN:	CK:	DW:	CK:
©TxDOT February 2012	CONT	SECT	JOB	HIGHWAY
REVISIONS	0231	03	156	IH-14
2-18	DIST		COUNTY	SHEET NO.
	WACO		BELL	29

DISCLAIMER:
The use of this standard is governed by the "Texas Engineering Practice Act". No warranty of any kind is made by TxDOT for any purpose whatsoever. TxDOT assumes no responsibility for the conversion of this standard to other formats or for incorrect results or damages resulting from its use.

DATE: 7/11/2025 4:32:30 PM
FILE: c:\txdot\pw_online\txdot3\patrick.jalufka\d0807940\tcp5-1-18.dgn

DISCLAIMER:
The use of this standard is governed by the "Texas Engineering Practice Act". No warranty of any kind is made by TxDOT for any purpose whatsoever. TxDOT assumes no responsibility for the conversion of this standard to other formats or for incorrect results or damages resulting from its use.

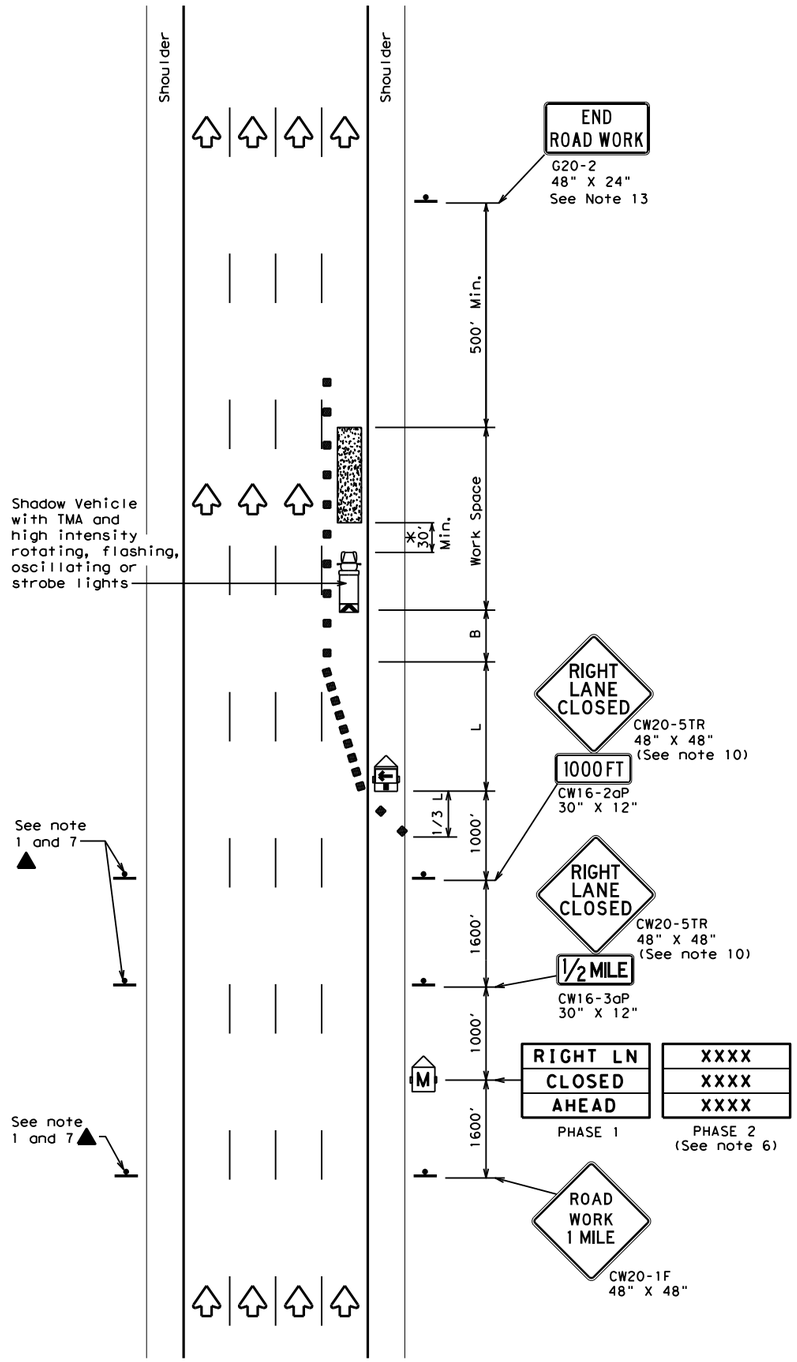

TCP (6-1a)

TYPICAL FREEWAY
ONE LANE CLOSURE

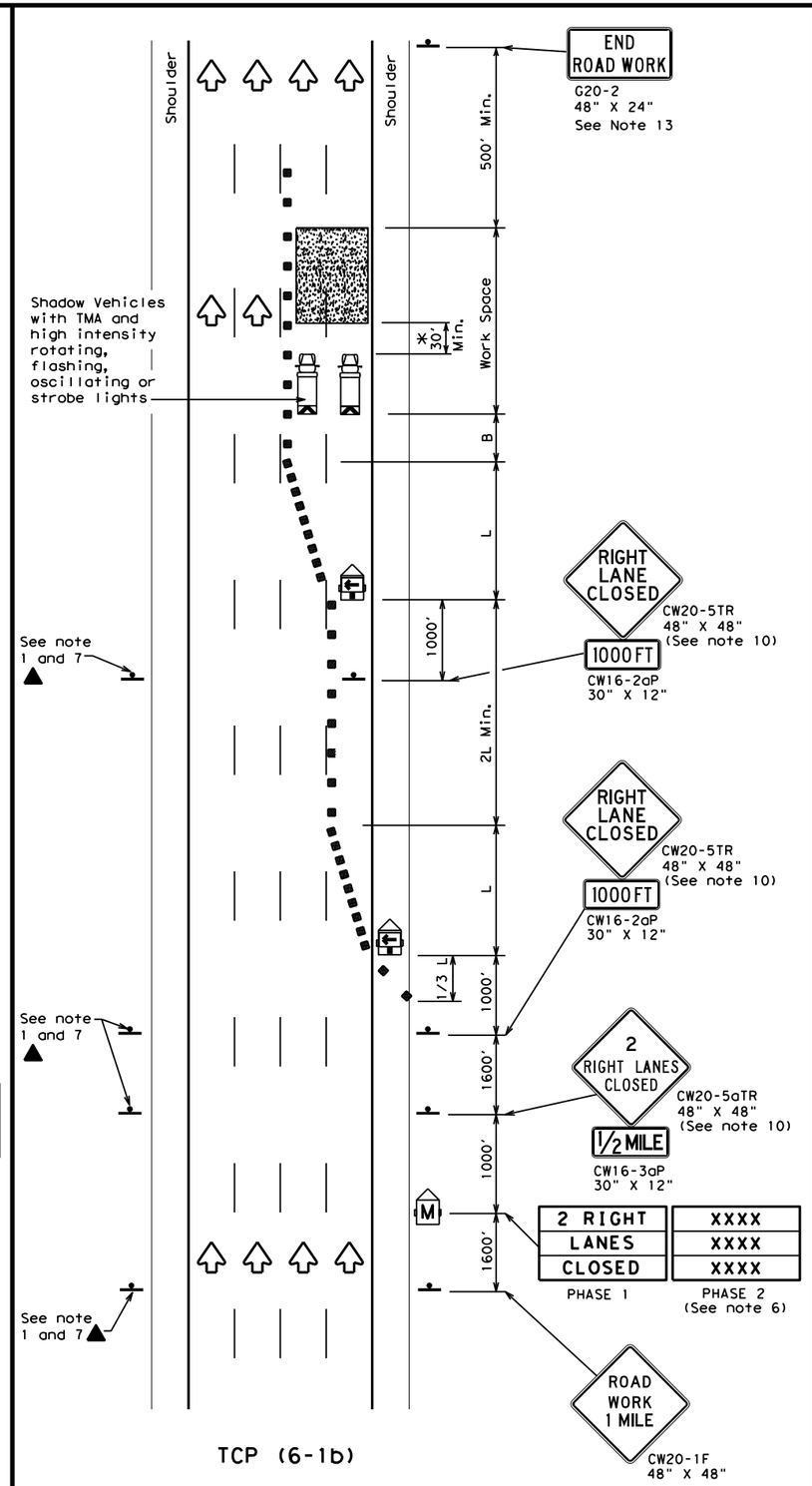

TCP (6-1b)

TYPICAL FREEWAY
TWO LANE CLOSURE

LEGEND

	Type 3 Barricade		Channelizing Devices
	Heavy Work Vehicle		Truck Mounted Attenuator (TMA)
	Trailer Mounted Flashing Arrow Board		Portable Changeable Message Sign (PCMS)
	Sign		Traffic Flow
	Flag		Flagger

Posted Speed	Formula	Minimum Desirable Taper Lengths "L" **			Suggested Maximum Spacing of Channelizing Devices		Suggested Longitudinal Buffer Space "B"
		10' Offset	11' Offset	12' Offset	On a Taper	On a Tangent	
45	L = WS	450'	495'	540'	45'	90'	195'
50		500'	550'	600'	50'	100'	240'
55		550'	605'	660'	55'	110'	295'
60		600'	660'	720'	60'	120'	350'
65		650'	715'	780'	65'	130'	410'
70		700'	770'	840'	70'	140'	475'
75		750'	825'	900'	75'	150'	540'
80		800'	880'	960'	80'	160'	615'

** Taper lengths have been rounded off.
L=Length of Taper(FT) W=Width of Offset(FT) S=Posted Speed(MPH)

TYPICAL USAGE

MOBILE	SHORT DURATION	SHORT TERM STATIONARY	INTERMEDIATE TERM STATIONARY	LONG TERM STATIONARY
	✓	✓	✓	

GENERAL NOTES

1. All traffic control devices illustrated are REQUIRED. Devices denoted with the triangle symbol may be omitted when stated elsewhere in the plans.
2. Drums or 42"cones are the typical channelizing devices. For Intermediate Term Stationary work, drums shall be used on tapers with drums or 42" cones used on tangent sections. Other channelizing devices may be used as directed by the Engineer.
3. All construction signs and barricades placed during any phase of work shall remain in place until removal is approved by the Engineer.
4. The Engineer may direct the Contractor to furnish additional signs and barricades as required to maintain traffic flow, detours and motorist safety during construction.
5. Static message boards or changeable message signs stating the date and duration of ramp or freeway lane closures shall be placed a minimum of seven (7) calendar days in advance of the actual closure.
6. Phase 2 of the PCMS message should include appropriate information formatted as shown on BC(6), such as "MERGE LEFT," recommended advisory speed, delay information, or other specific warnings.
7. Duplicate construction warning signs should be erected on the medians side of freeways where median width will permit and traffic volume justifies the signing.
8. The number of closed lanes may be increased provided the spacing of traffic control devices, taper lengths and tangent lengths meet the requirements of the TMUTCD.
9. Warning signs for intermediate term stationary work should be mounted at 7' to the bottom of the sign.
10. Warning signs shown shall be appropriately altered for left lane closures. When signs are mounted at 1' height for short term stationary or short duration work, sign versions shown in the SHSD for Texas with distances on the sign face rather than mounted on a plaque below the sign may be used.
11. When possible, PCMS units should be located in advance of the last available exit ramp prior to the lane closure to allow motorists an alternate route. They may also be relocated to improve advance warning in case of unanticipated queuing or congestion.
12. For Intermediate Term Stationary work at night, floodlights should be used to illuminate the work area and equipment crossings. Floodlights shall not produce a disabling glare condition for road users or workers.
13. The END ROAD WORK (G20-2) sign may be omitted when it conflicts with G20-2 signs already in place on the project.

* A shadow vehicle equipped with a Truck Mounted Attenuator is typically required. A shadow vehicle equipped with a TMA shall be used if it can be positioned 30' to 100' in advance of the area of crew exposure without adversely affecting the work performance.

Texas Department of Transportation
Traffic Operations Division Standard

TRAFFIC CONTROL PLAN FREEWAY LANE CLOSURES

TCP(6-1)-12

FILE: tcp6-1.dgn	DN: TxDOT	CK: TxDOT	DW: TxDOT	CK: TxDOT
© TxDOT February 1998	CONT	SECT	JOB	HIGHWAY
REVISIONS 8-12	0231	03	156	IH-14
	DIST	COUNTY		SHEET NO.
	WACO	BELL		30

DATE: 7/11/2025 4:32:44 PM
FILE: c:\txdot\pw_online\txdot3\patrick.jalufka\d0807940\tcp6-1.dgn

DISCLAIMER:
The use of this standard is governed by the "Texas Engineering Practice Act". No warranty of any kind is made by TxDOT for any purpose whatsoever. TxDOT assumes no responsibility for the conversion of this standard to other formats or for incorrect results or damages resulting from its use.

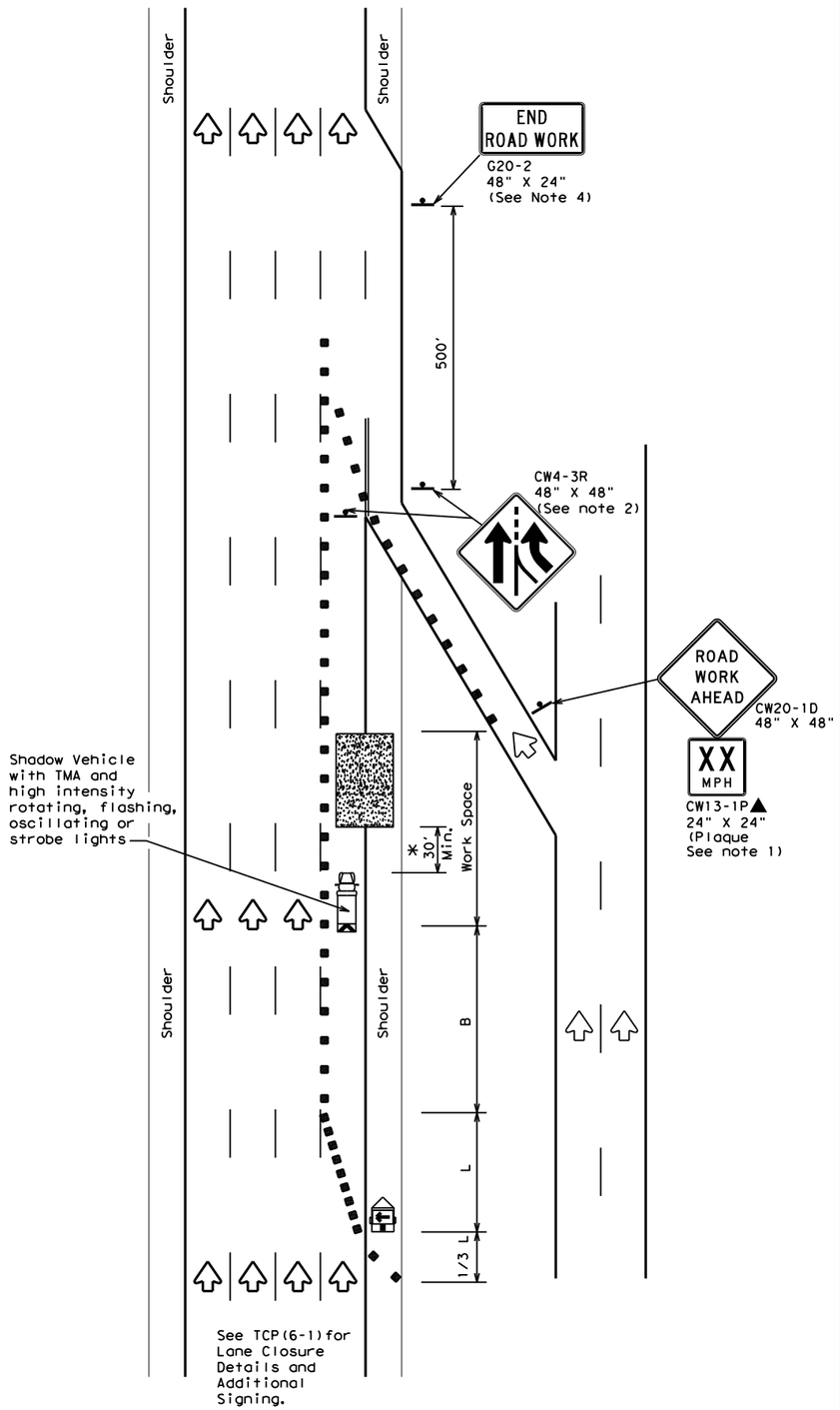

TCP (6-2a)

ENTRANCE RAMP OPEN
WORK WITHIN 500' OF RAMP

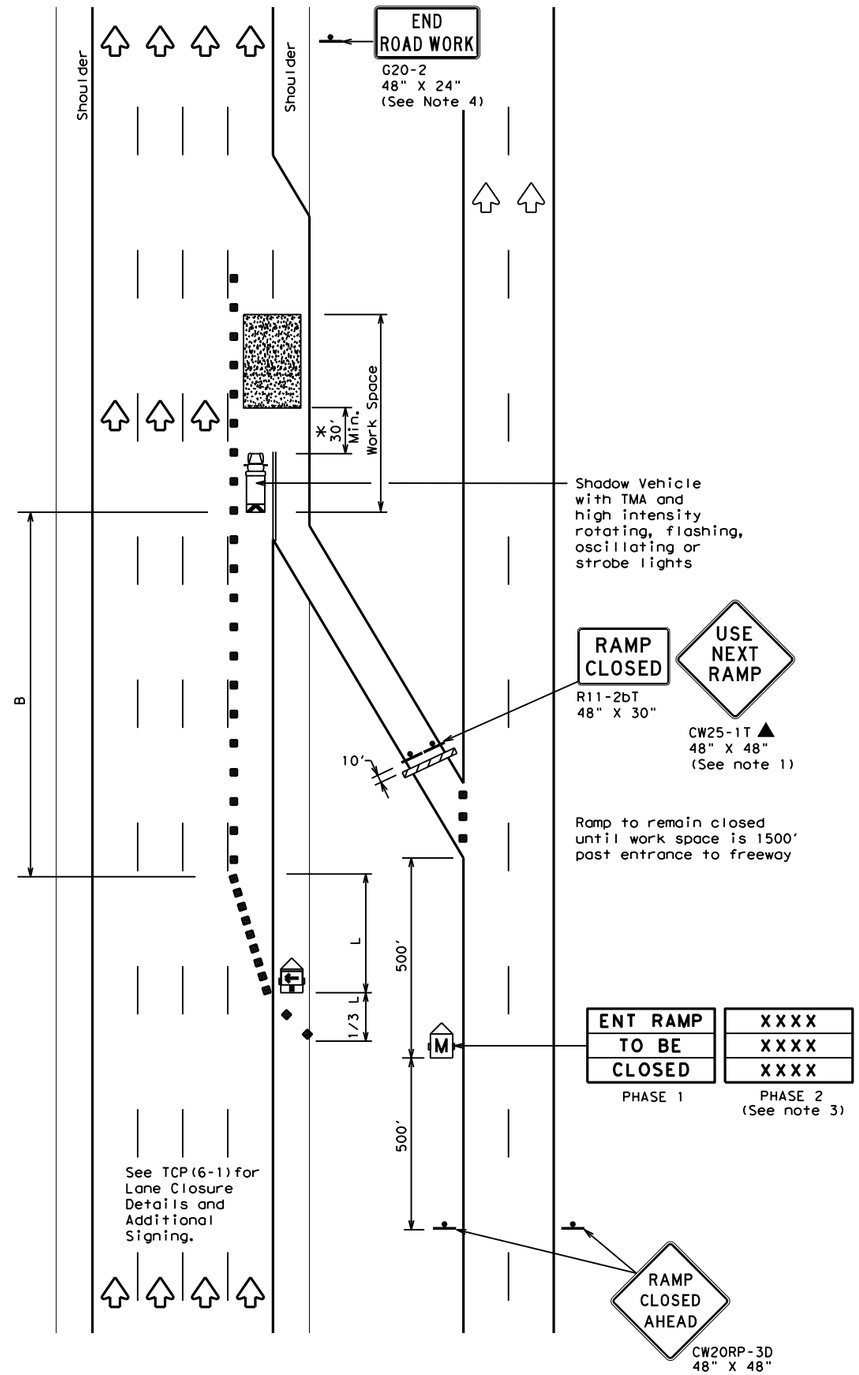

TCP (6-2b)

ENTRANCE RAMP CLOSED

LEGEND			
	Type 3 Barricade		Channelizing Devices
	Heavy Work Vehicle		Truck Mounted Attenuator (TMA)
	Trailer Mounted Flashing Arrow Board		Portable Changeable Message Sign (PCMS)
	Sign		Traffic Flow
	Flag		Flagger

Posted Speed	Formula	Minimum Desirable Taper Lengths "L" **			Suggested Maximum Spacing of Channelizing Devices		Suggested Longitudinal Buffer Space "B"
		10' Offset	11' Offset	12' Offset	On a Taper	On a Tangent	
45	L=WS	450'	495'	540'	45'	90'	195'
50		500'	550'	600'	50'	100'	240'
55		550'	605'	660'	55'	110'	295'
60		600'	660'	720'	60'	120'	350'
65		650'	715'	780'	65'	130'	410'
70		700'	770'	840'	70'	140'	475'
75		750'	825'	900'	75'	150'	540'
80		800'	880'	960'	80'	160'	615'

** Taper lengths have been rounded off.
L=Length of Taper(FT) W=Width of Offset(FT) S=Posted Speed(MPH)

TYPICAL USAGE				
MOBILE	SHORT DURATION	SHORT TERM STATIONARY	INTERMEDIATE TERM STATIONARY	LONG TERM STATIONARY
	✓	✓	✓	

GENERAL NOTES

1. All traffic control devices illustrated are REQUIRED. Devices denoted with the triangle symbol may be omitted when stated elsewhere in the plans.
2. ADDED LANE Symbol (CW4-3) sign may be omitted when sign between ramp and mainlane can be seen from both roadways.
3. See "Advance Notice List" on BC(6) for recommended date and time formatting options for PCMS Phase 2 message.
4. The END ROAD WORK (G20-2) sign may be omitted when it conflicts with G20-2 signs already in place on the project.

*A shadow vehicle equipped with a Truck Mounted Attenuator is typically required. A shadow vehicle equipped with a TMA shall be used if it can be positioned 30' to 100' in advance of the area of crew exposure without adversely affecting the work performance.

Additional requirements for lane closures and advance signing shall be as shown on TCP (6-1) or as directed by the Engineer.

Texas Department of Transportation
Traffic Operations Division Standard

TRAFFIC CONTROL PLAN
WORK AREA NEAR RAMP

TCP(6-2)-12

FILE: tcp6-2.dgn	DN: TxDOT	CK: TxDOT	DW: TxDOT	CK: TxDOT
©TxDOT February 1994	CONT	SECT	JOB	HIGHWAY
REVISIONS	0231	03	156	IH-14
1-97 8-98	DIST		COUNTY	SHEET NO.
4-98 8-12	WACO		BELL	31

DATE: 7/11/2025 4:32:56 PM
FILE: c:\txdot\pw_online\txdot3\patrick.jalufka\d0807940\tcp6-2.dgn

DISCLAIMER:
The use of this standard is governed by the "Texas Engineering Practice Act". No warranty of any kind is made by TxDOT for any purpose whatsoever. TxDOT assumes no responsibility for the conversion of this standard to other formats or for incorrect results or damages resulting from its use.

DATE: 7/11/2025 4:33:09 PM
FILE: c:\txdot\pw_online\txdot3\patrick.jalufka\d0807940\tcp6-3.dgn

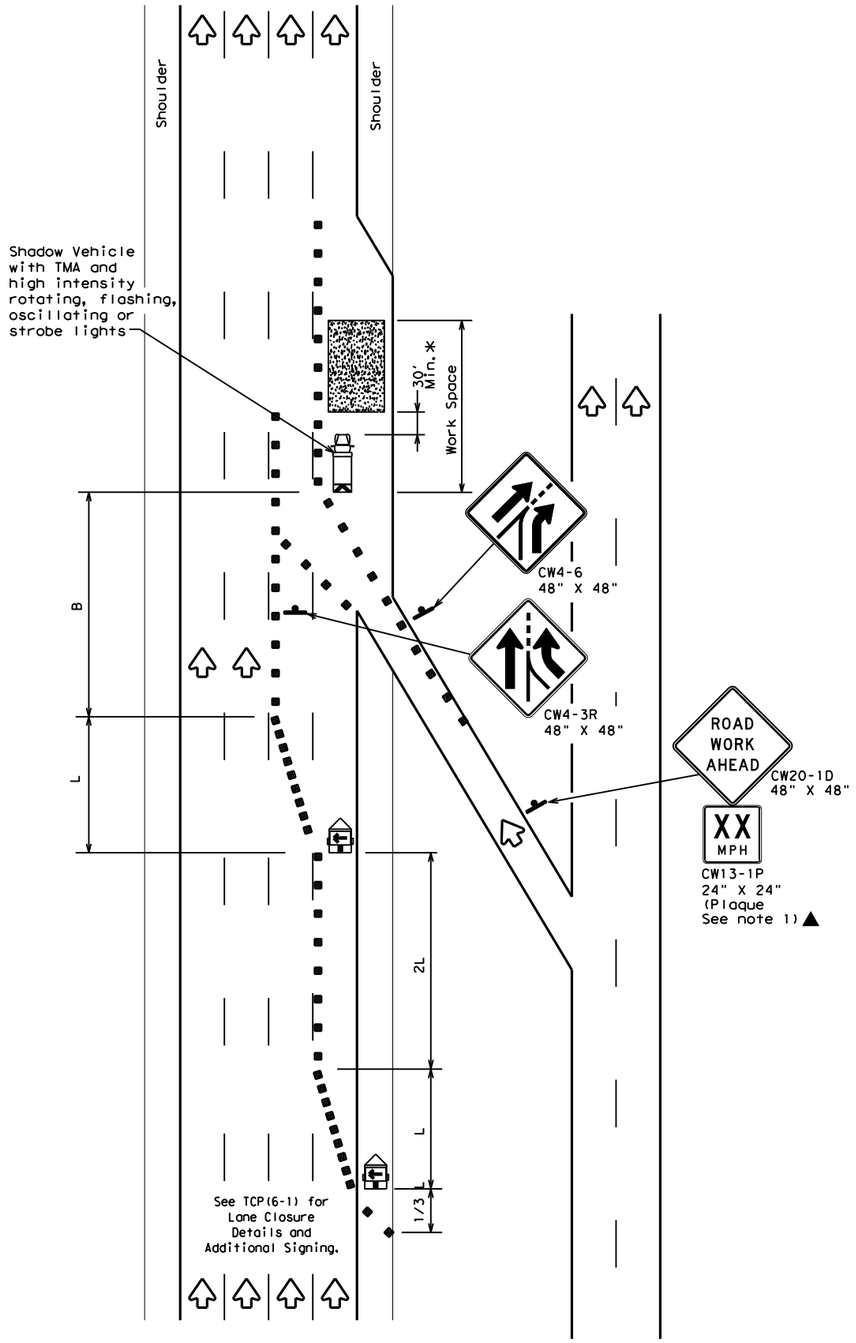

TCP (6-3a)

ENTRANCE RAMP OPEN

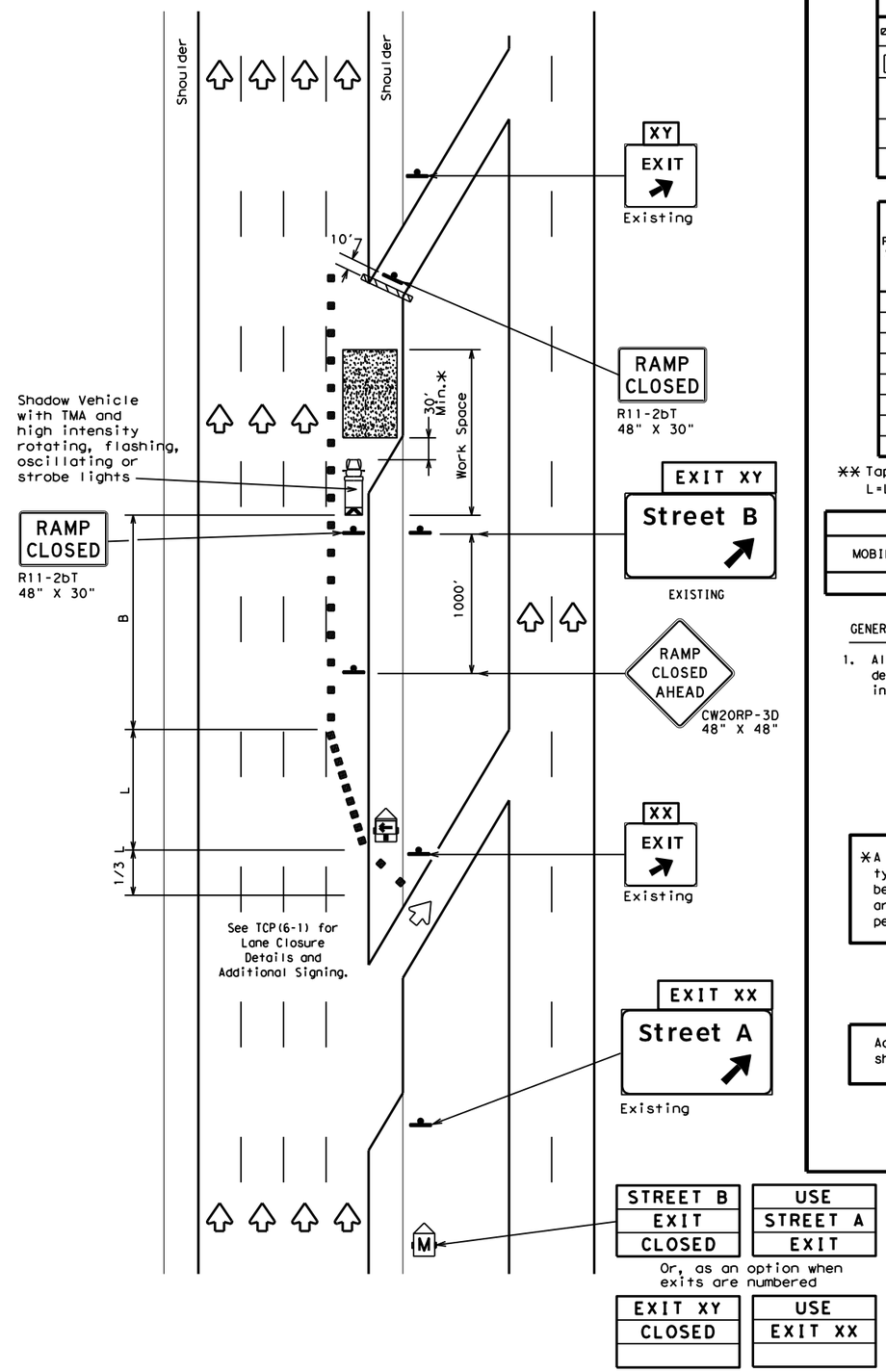

TCP (6-3b)

EXIT RAMP CLOSED

TRAFFIC EXITS PRIOR TO CLOSED RAMP

LEGEND			
	Type 3 Barricade		Channelizing Devices
	Heavy Work Vehicle		Truck Mounted Attenuator (TMA)
	Trailer Mounted Flashing Arrow Board		Portable Changeable Message Sign (PCMS)
	Sign		Traffic Flow
	Flag		Flagger

Posted Speed	Formula	Minimum Desirable Taper Lengths "L" ✱✱			Suggested Maximum Spacing of Channelizing Devices		Suggested Longitudinal Buffer Space "B"
		10' Offset	11' Offset	12' Offset	On a Taper	On a Tangent	
45	L = WS	450'	495'	540'	45'	90'	195'
50		500'	550'	600'	50'	100'	240'
55		550'	605'	660'	55'	110'	295'
60		600'	660'	720'	60'	120'	350'
65		650'	715'	780'	65'	130'	410'
70		700'	770'	840'	70'	140'	475'
75		750'	825'	900'	75'	150'	540'
80		800'	880'	960'	80'	160'	615'

✱✱ Taper lengths have been rounded off.
L=Length of Taper(FT) W=Width of Offset(FT) S=Posted Speed(MPH

TYPICAL USAGE				
MOBILE	SHORT DURATION	SHORT TERM STATIONARY	INTERMEDIATE TERM STATIONARY	LONG TERM STATIONARY
	✓	✓	✓	

GENERAL NOTES:

1. All traffic control devices illustrated are REQUIRED. Devices denoted with the triangle symbol may be omitted when stated elsewhere in the plans.

✱A shadow vehicle equipped with a Truck Mounted Attenuator is typically required. A shadow vehicle equipped with a TMA shall be used if it can be positioned 30' to 100' in advance of the area of crew exposure without adversely affecting the work performance.

Additional requirements for lane closures and advance signing shall be as shown on TCP (6-1) or as directed by the Engineer.

Texas Department of Transportation
Traffic Operations Division Standard

TRAFFIC CONTROL PLAN WORK AREA BEYOND RAMP

TCP(6-3)-12

FILE: tcp6-3.dgn	DN: TxDOT	CK: TxDOT	DW: TxDOT	CK: TxDOT
©TxDOT February 1994	CONT	SECT	JOB	HIGHWAY
REVISIONS	0231	03	156	IH-14
1-97 8-98	DIST		COUNTY	SHEET NO.
4-98 8-12	WACO		BELL	32

DISCLAIMER:
The use of this standard is governed by the "Texas Engineering Practice Act". No warranty of any kind is made by TxDOT for any purpose whatsoever. TxDOT assumes no responsibility for the conversion of this standard to other formats or for incorrect results or damages resulting from its use.

DATE: 7/11/2025 4:33:21 PM
FILE: c:\txdot\pw_online\txdot3\patrick.jalufka\d0807940\tcp6-4.dgn

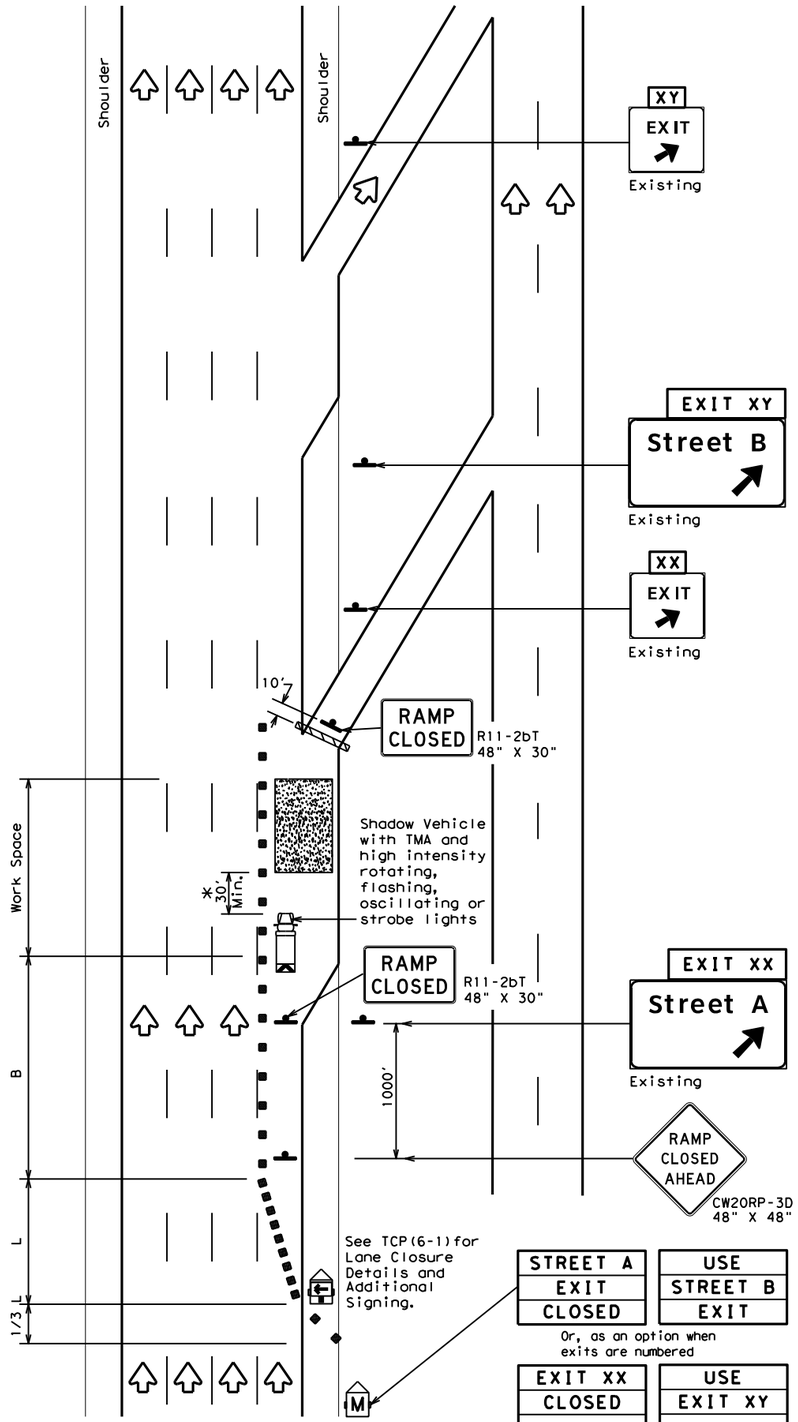

TCP (6-4a)

EXIT RAMP CLOSED

TRAFFIC EXITS PAST CLOSED RAMP

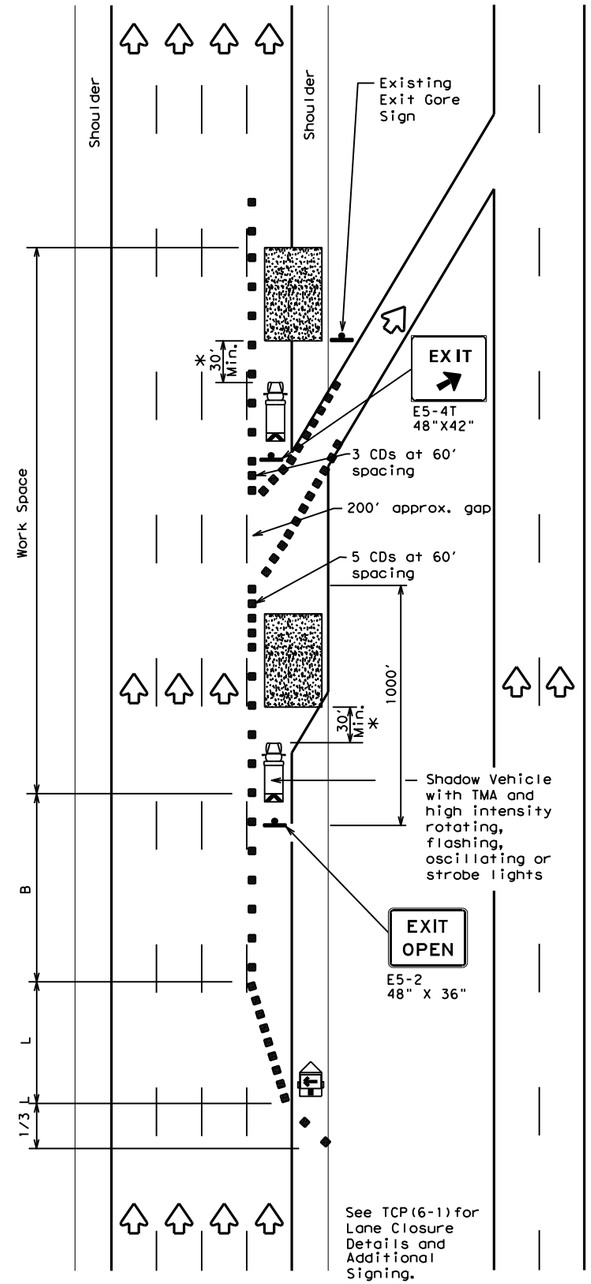

TCP (6-4b)

EXIT RAMP OPEN

LEGEND			
	Type 3 Barricade		Channelizing Devices (CDs)
	Heavy Work Vehicle		Truck Mounted Attenuator (TMA)
	Trailer Mounted Flashing Arrow Board	M	Portable Changeable Message Sign (PCMS)
	Sign		Traffic Flow
	Flag		Flagger

Posted Speed	Formula	Minimum Desirable Taper Lengths "L" **			Suggested Maximum Spacing of Channelizing Devices		Suggested Longitudinal Buffer Space "B"
		10' Offset	11' Offset	12' Offset	On a Taper	On a Tangent	
45	L = WS	450'	495'	540'	45'	90'	195'
50		500'	550'	600'	50'	100'	240'
55		550'	605'	660'	55'	110'	295'
60		600'	660'	720'	60'	120'	350'
65		650'	715'	780'	65'	130'	410'
70		700'	770'	840'	70'	140'	475'
75		750'	825'	900'	75'	150'	540'
80		800'	880'	960'	80'	160'	615'

** Taper lengths have been rounded off.
L = Length of Taper (FT) W = Width of Offset (FT) S = Posted Speed (MPH)

TYPICAL USAGE				
MOBILE	SHORT DURATION	SHORT TERM STATIONARY	INTERMEDIATE TERM STATIONARY	LONG TERM STATIONARY
	✓	✓	✓	

GENERAL NOTES

1. All traffic control devices illustrated are REQUIRED. Devices denoted with the triangle symbol may be omitted when stated elsewhere in the plans.
2. See BC Standards for sign details.

*A shadow vehicle equipped with a Truck Mounted Attenuator is typically required. A shadow vehicle equipped with a TMA shall be used if it can be positioned 30' to 100' in advance of the area of crew exposure without adversely affecting the work performance.

Additional requirements for lane closures and advance signing shall be as shown on TCP (6-1) or as directed by the Engineer.

Texas Department of Transportation
Traffic Operations Division Standard

TRAFFIC CONTROL PLAN
WORK AREA AT EXIT RAMP

TCP(6-4)-12

FILE: tcp6-4.dgn	DN: TxDOT	CK: TxDOT	DW: TxDOT	CK: TxDOT
© TxDOT Feburary 1994	CONT	SECT	JOB	HIGHWAY
REVISIONS	0231	03	156	IH-14
1-97 8-98	DIST		COUNTY	SHEET NO.
4-98 8-12	WACO		BELL	33

DISCLAIMER:
The use of this standard is governed by the "Texas Engineering Practice Act". No warranty of any kind is made by TxDOT for any purpose whatsoever. TxDOT assumes no responsibility for the conversion of this standard to other formats or for incorrect results or damages resulting from its use.

DATE: 7/11/2025 4:33:34 PM
FILE: c:\txdot\pw_online\txdot3\patrick.jalufka\d0807940\tcp6-5.dgn

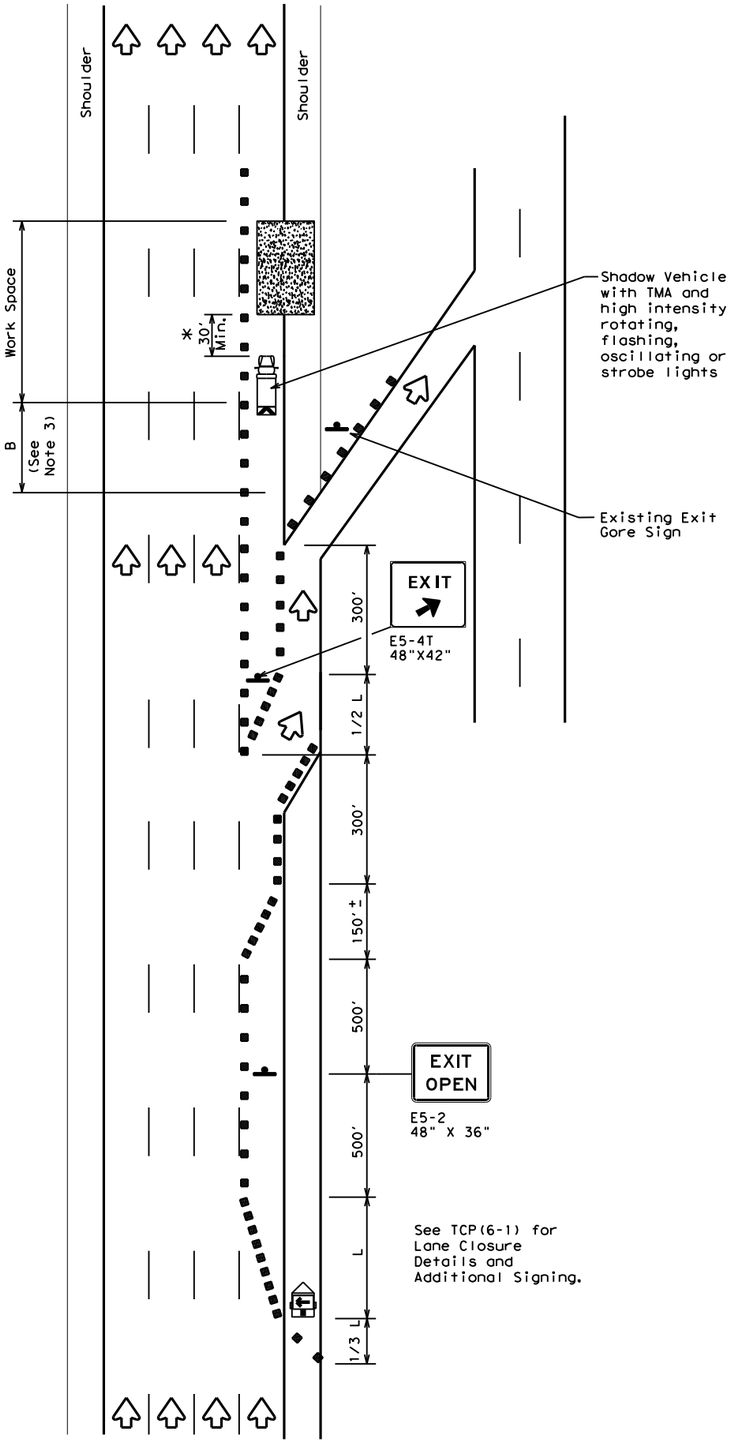

TCP (6-5a)

EXIT RAMP OPEN

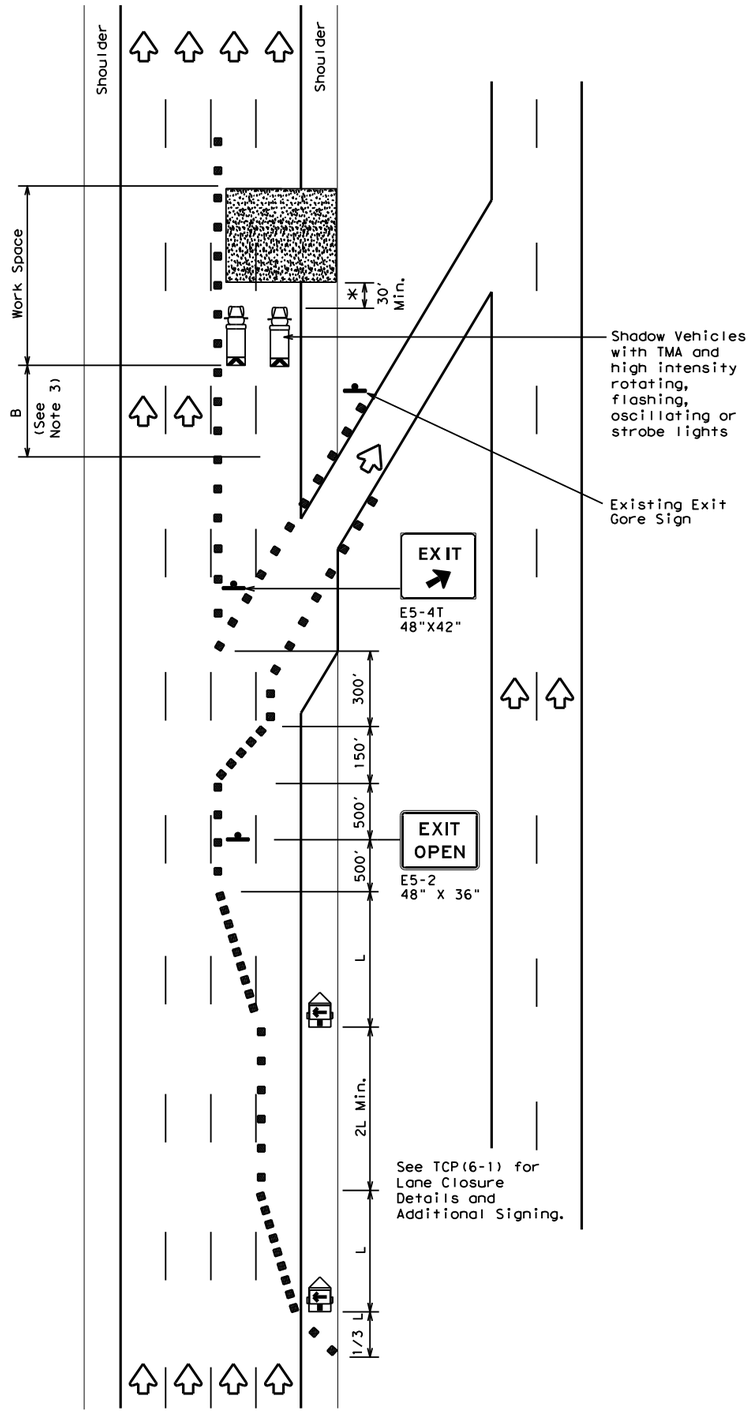

TCP (6-5b)

EXIT RAMP OPEN
TWO LANE CLOSURE WITHIN 1500' PAST EXIT RAMP

LEGEND

	Type 3 Barricade		Channelizing Devices
	Heavy Work Vehicle		Truck Mounted Attenuator (TMA)
	Trailer Mounted Flashing Arrow Board		Portable Changeable Message Sign (PCMS)
	Sign		Traffic Flow
	Flag		Flagger

Posted Speed	Formula	Minimum Desirable Taper Lengths "L" **			Suggested Maximum Spacing of Channelizing Devices		Suggested Longitudinal Buffer Space "B"
		10' Offset	11' Offset	12' Offset	On a Taper	On a Tangent	
45	L=WS	450'	495'	540'	45'	90'	195'
50		500'	550'	600'	50'	100'	240'
55		550'	605'	660'	55'	110'	295'
60		600'	660'	720'	60'	120'	350'
65		650'	715'	780'	65'	130'	410'
70		700'	770'	840'	70'	140'	475'
75		750'	825'	900'	75'	150'	540'
80		800'	880'	960'	80'	160'	615'

** Taper lengths have been rounded off.
L=Length of Taper(FT) W=Width of Offset(FT) S=Posted Speed(MPH)

TYPICAL USAGE

MOBILE	SHORT DURATION	SHORT TERM STATIONARY	INTERMEDIATE TERM STATIONARY	LONG TERM STATIONARY
	✓	✓	✓	

GENERAL NOTES

1. All traffic control devices illustrated are REQUIRED. Devices denoted with the triangle symbol may be omitted when stated elsewhere in the plans.
2. See BC standards for sign details.
3. If adequate longitudinal buffer length "B" does not exist between the work space and the exit ramp, consideration should be given to closing the ramp.

*A shadow vehicle equipped with a Truck Mounted Attenuator is typically required. A shadow vehicle equipped with a TMA shall be used if it can be positioned 30' to 100' in advance of the area of crew exposure without adversely affecting the work performance.

Additional requirements for lane closures and advance signing shall be as shown on TCP (6-1) or as directed by the Engineer.

Texas Department of Transportation
Traffic Operations Division Standard

TRAFFIC CONTROL PLAN
WORK AREA BEYOND EXIT RAMP

TCP(6-5)-12

FILE: tcp6-5.dgn	DN: TxDOT	CK: TxDOT	DW: TxDOT	CK: TxDOT
©TxDOT Feburary 1998	CONT	SECT	JOB	HIGHWAY
REVISIONS	0231	03	156	IH-14
1-97 8-98	DIST		COUNTY	SHEET NO.
4-98 8-12	WACO		BELL	34

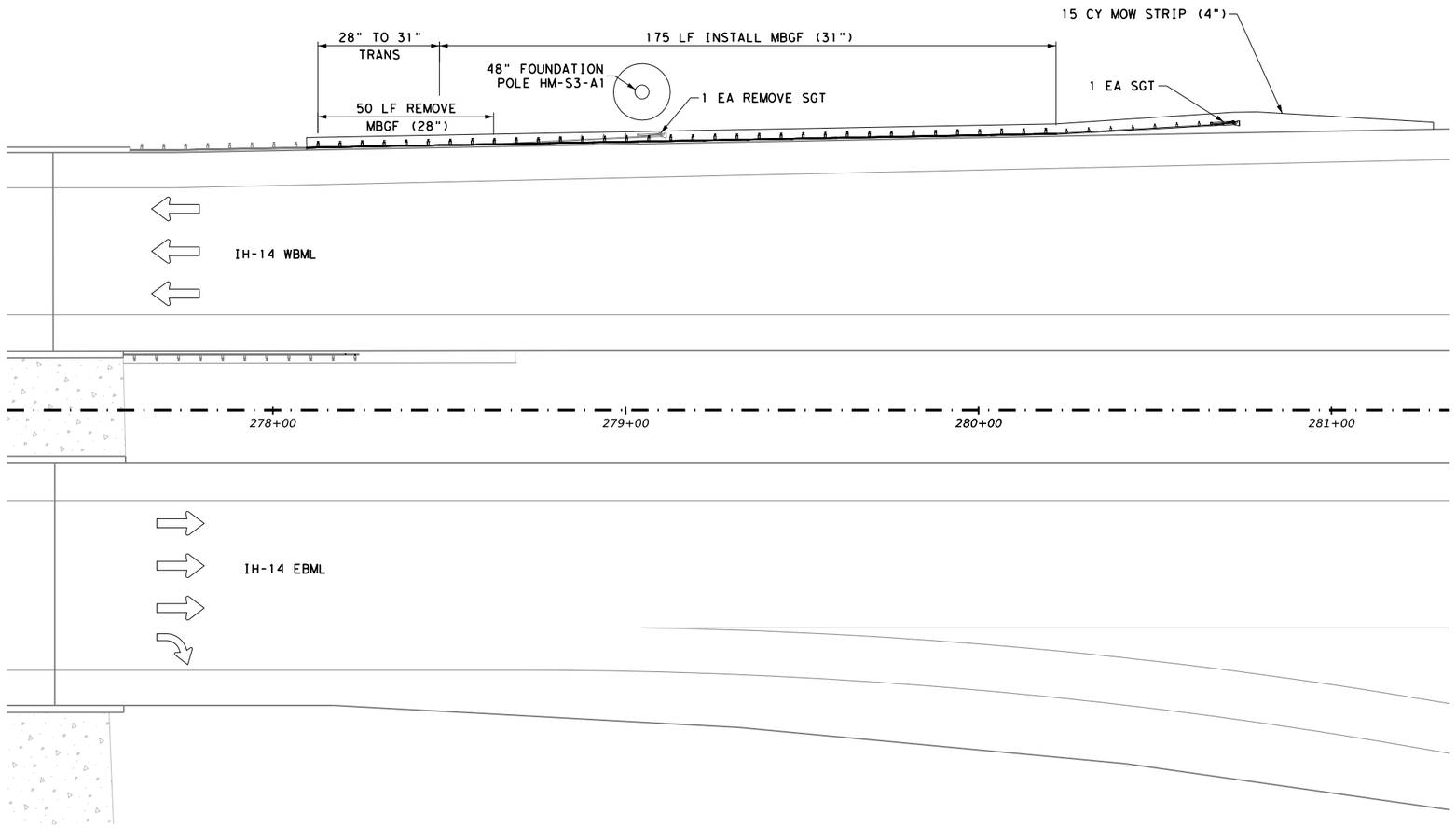

SUMMARY OF ROADWAY ITEMS			
BID CODE	DESCRIPTION	UNIT	QTY
0432 7013	RIPRAP (MOW STRIP)(4 IN)	CY	15
0540 7002	MTL W-BEAM GD FEN (STEEL POST)	LF	175
0540 7028	MTL BM GD FEN TRANS (31"-28")	EA	1
0542 7001	REMOVE METAL BEAM GUARD FENCE	LF	50
0544 7001	GUARDRAIL END TREATMENT (INSTALL)	EA	1
0544 7003	GUARDRAIL END TREATMENT (REMOVE)	EA	1
0658 7018	INSTL DEL ASSM (D-SW)SZ 1(BRF)GF2	EA	4

INTERIM REVIEW

THIS DOCUMENT IS RELEASED FOR THE PURPOSE OF INTERIM REVIEW UNDER THE AUTHORITY OF

PATRICK JALUFKA P.E., ON: 7/11/2025

IT IS NOT TO BE USED FOR CONSTRUCTION

PRELIMINARY NOT FOR CONSTRUCTION

© 2026 Texas Department of Transportation

MBGF LAYOUT

SCALE: 0 10 20 40 FEET
1" = 40' HORIZ.

SHEET 1 OF 5

CHANGE ORDER	FED. RD. DIV. NO.	CONT	SECT	JOB	HIGHWAY
	6	0231	03	156	IH-14
	STATE	DIST	COUNTY		SHEET NO.
	TEXAS	WACO	BELL		35

c:\txdot\pwonline\txdot3\patrick.jalufka\d0785495\MBGF Layouts.dgn
7/11/2025
4:33:56 PM
NODE

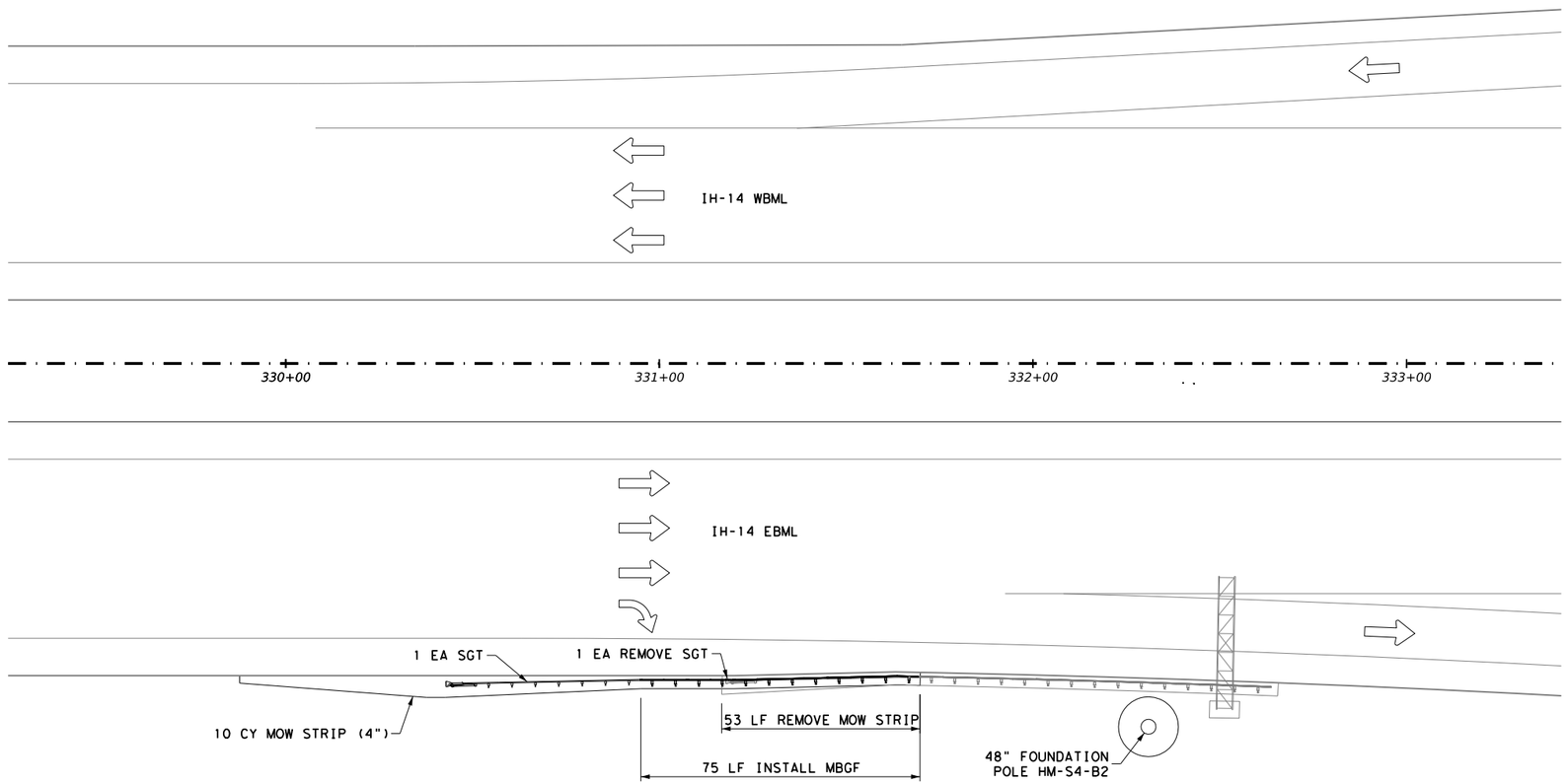

SUMMARY OF ROADWAY ITEMS			
BID CODE	DESCRIPTION	UNIT	QTY
0104 7005	REMOVING CONCRETE(MOW STRIP)	LF	53
0432 7013	RIPRAP (MOW STRIP)(4 IN)	CY	10
0540 7002	MTL W-BEAM GD FEN (STEEL POST)	LF	75
0544 7001	GUARDRAIL END TREATMENT (INSTALL)	EA	1
0544 7003	GUARDRAIL END TREATMENT (REMOVE)	EA	1
0658 7018	INSTL DEL ASSM (D-SW)SZ 1(BRF)GF2	EA	3

INTERIM REVIEW

THIS DOCUMENT IS RELEASED FOR THE PURPOSE OF INTERIM REVIEW UNDER THE AUTHORITY OF

PATRICK JALUFKA P.E., ON: 7/11/2025

IT IS NOT TO BE USED FOR CONSTRUCTION

PRELIMINARY NOT FOR CONSTRUCTION

© 2026 Texas Department of Transportation

MBGF LAYOUT

SCALE: 0 10 20 40 FEET
1" = 40' HORIZ.

SHEET 2 OF 5

CHANGE ORDER	FED. RD. DIV. NO.	CONT	SECT	JOB	HIGHWAY
	6	0231	03	156	IH-14
	STATE	DIST	COUNTY		SHEET NO.
	TEXAS	WACO	BELL		36

c:\txdot\pw*online\txdot3\patrick.jalufka\d0785495\MBGF Layouts.dgn
7/11/2025 4:33:58 PM
NODE

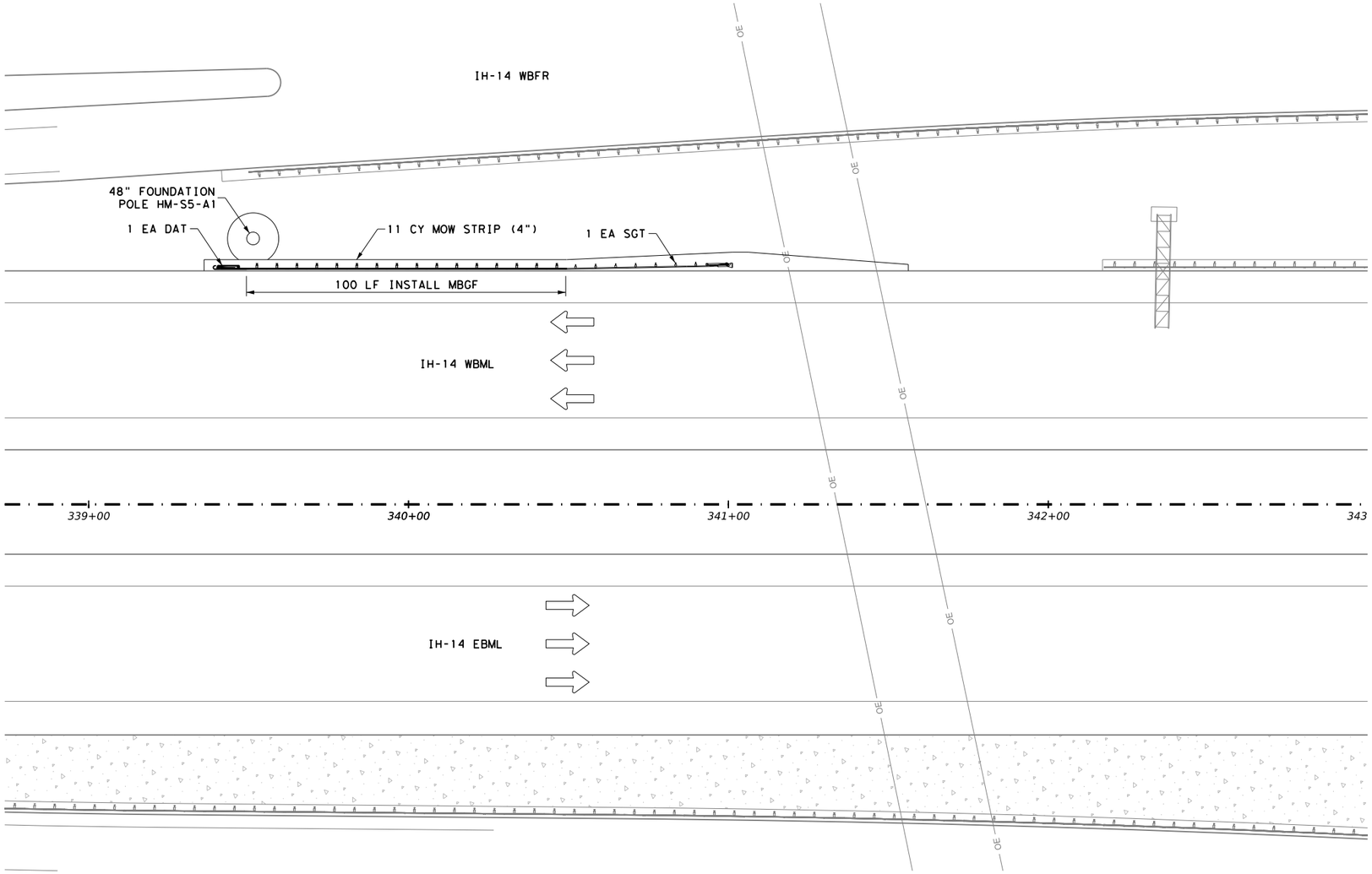

SUMMARY OF ROADWAY ITEMS			
BID CODE	DESCRIPTION	UNIT	QTY
0432 7013	RIPRAP (MOW STRIP)(4 IN)	CY	11
0540 7002	MTL W-BEAM GD FEN (STEEL POST)	LF	100
0540 7015	DOWNSTREAM ANCHOR TERMINAL SECTION	EA	1
0544 7001	GUARDRAIL END TREATMENT (INSTALL)	EA	1
0658 7018	INSTL DEL ASSM (D-SW)SZ 1(BRF)GF2	EA	3

INTERIM REVIEW

THIS DOCUMENT IS RELEASED FOR THE PURPOSE OF INTERIM REVIEW UNDER THE AUTHORITY OF

PATRICK JALUFKA P.E., ON: 7/8/2025

IT IS NOT TO BE USED FOR CONSTRUCTION

PRELIMINARY NOT FOR CONSTRUCTION

© 2026 Texas Department of Transportation

MBGF LAYOUT

SCALE: 0 10 20 40 FEET
1" = 40' HORIZ.

SHEET 3 OF 5

CHANGE ORDER	FED. RD. DIV. NO.	CONT	SECT	JOB	HIGHWAY
	6	0231	03	156	IH-14
	STATE	DIST	COUNTY		SHEET NO.
	TEXAS	WACO	BELL		37

4:34:08 PM 7/11/2025 c:\txdot\pwonline\txdot3\patrick.jalufka\d0785495\MBGF Layouts.dgn NODE

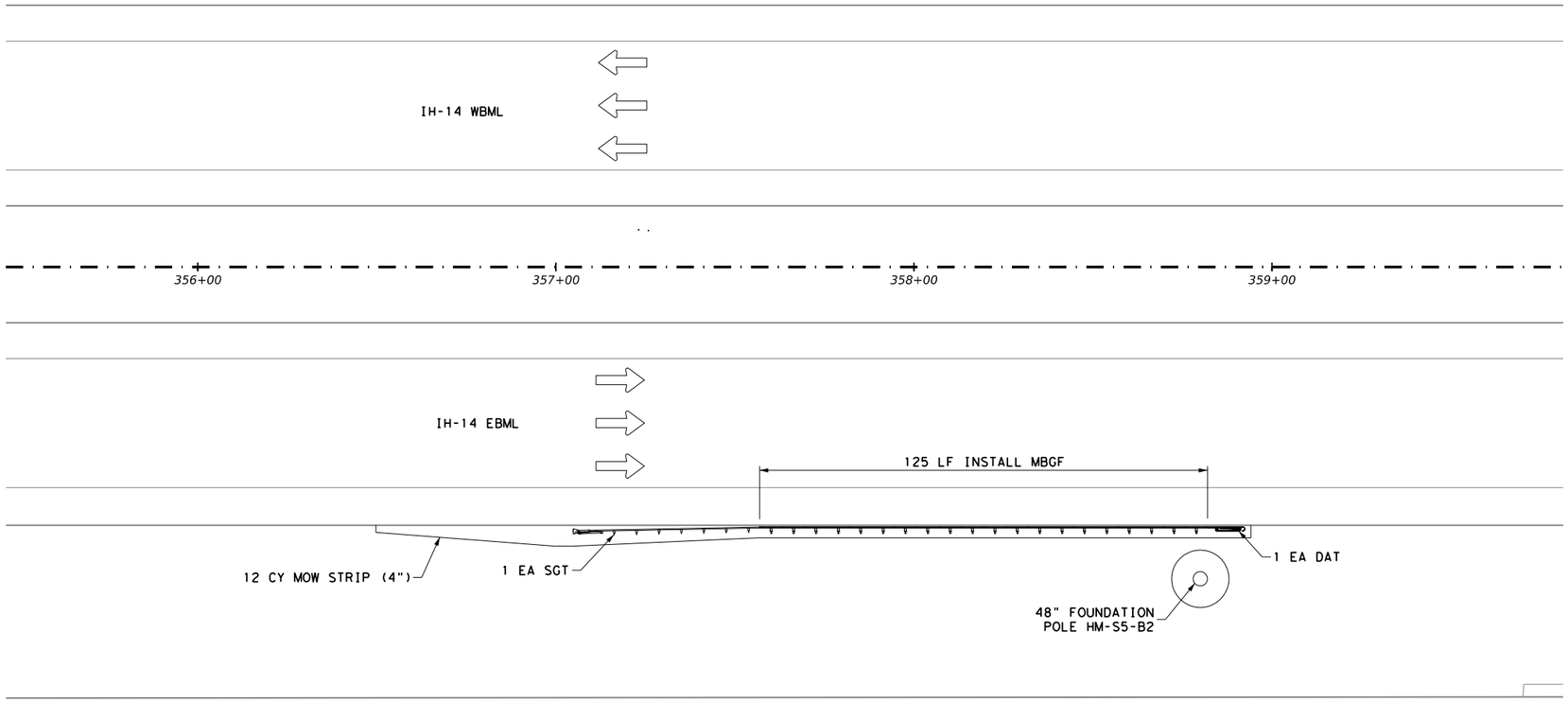

SUMMARY OF ROADWAY ITEMS			
BID CODE	DESCRIPTION	UNIT	QTY
0432 7013	RIPRAP (MOW STRIP)(4 IN)	CY	12
0540 7002	MTL W-BEAM GD FEN (STEEL POST)	LF	125
0540 7015	DOWNSTREAM ANCHOR TERMINAL SECTION	EA	1
0544 7001	GUARDRAIL END TREATMENT (INSTALL)	EA	1
0658 7018	INSTL DEL ASSM (D-SW)SZ 1(BRF)GF2	EA	3

INTERIM REVIEW

THIS DOCUMENT IS RELEASED FOR THE PURPOSE OF INTERIM REVIEW UNDER THE AUTHORITY OF

PATRICK JALUFKA P.E., ON: 7/11/2025

IT IS NOT TO BE USED FOR CONSTRUCTION

PRELIMINARY NOT FOR CONSTRUCTION

© 2026 Texas Department of Transportation

MBGF LAYOUT

SCALE: 0 10 20 40 FEET
1" = 40' HORIZ.

SHEET 4 OF 5

CHANGE ORDER	FED. RD. DIV. NO.	CONT	SECT	JOB	HIGHWAY
	6	0231	03	156	IH-14
	STATE	DIST	COUNTY		SHEET NO.
	TEXAS	WACO	BELL		38

c:\txdot\pw*online\txdot3\patrick.jalufka\d0785495\MBGF Layouts.dgn 7/11/2025 4:34:12 PM
NODE

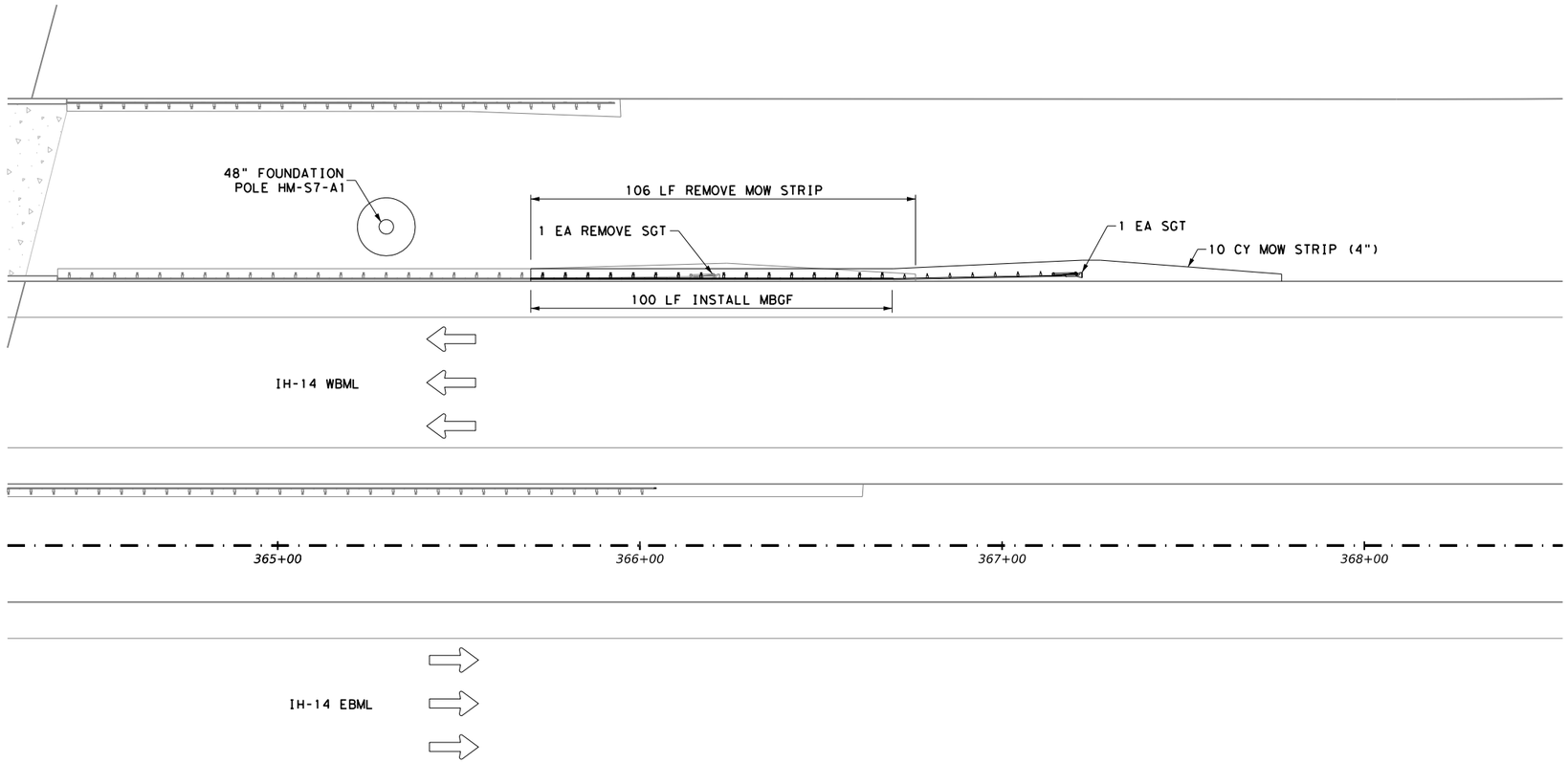

SUMMARY OF ROADWAY ITEMS			
BID CODE	DESCRIPTION	UNIT	QTY
0104 7005	REMOVING CONCRETE(MOW STRIP)	LF	106
0432 7013	RIPRAP (MOW STRIP)(4 IN)	CY	10
0540 7002	MTL W-BEAM GD FEN (STEEL POST)	LF	100
0544 7001	GUARDRAIL END TREATMENT (INSTALL)	EA	1
0544 7003	GUARDRAIL END TREATMENT (REMOVE)	EA	1
0658 7018	INSTL DEL ASSM (D-SW)SZ 1(BRF)GF2	EA	3

INTERIM REVIEW

THIS DOCUMENT IS RELEASED FOR THE PURPOSE OF INTERIM REVIEW UNDER THE AUTHORITY OF

PATRICK JALUFKA P.E., ON: 7/8/2025

IT IS NOT TO BE USED FOR CONSTRUCTION

PRELIMINARY NOT FOR CONSTRUCTION

© 2026 Texas Department of Transportation

MBGF LAYOUT

SCALE: 0 10 20 40 FEET
1" = 40' HORIZ.

SHEET 5 OF 5

CHANGE ORDER	FED. RD. DIV. NO.	CONT	SECT	JOB	HIGHWAY
	6	0231	03	156	IH-14
	STATE	DIST	COUNTY		SHEET NO.
	TEXAS	WACO	BELL		39

4:34:14 PM 7/11/2025 c:\txdot\pw*online\txdot3\patrick.jalufka\d0785495\MBGF Layouts.dgn NODE

DISCLAIMER:
THE USE OF THIS STANDARD IS GOVERNED BY THE "TEXAS ENGINEERING PRACTICE ACT". NO WARRANTY OF ANY KIND IS MADE BY TXDOT FOR ANY PURPOSE WHATSOEVER. TXDOT ASSUMES NO RESPONSIBILITY FOR THE CONVERSION OF THIS STANDARD TO OTHER FORMATS OR FOR INCORRECT RESULTS OR DAMAGES RESULTING FROM ITS USE.

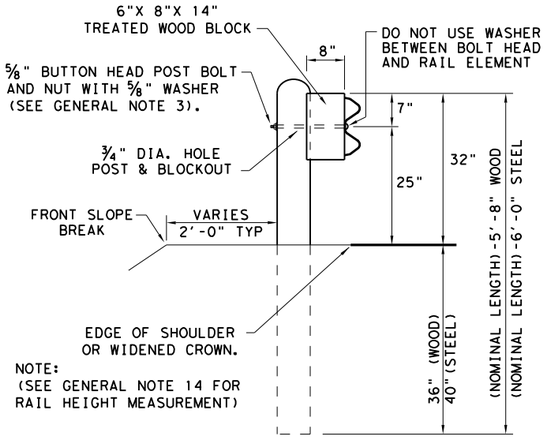

NOTE:
(SEE GENERAL NOTE 14 FOR RAIL HEIGHT MEASUREMENT)

TYPICAL POST PLACEMENT

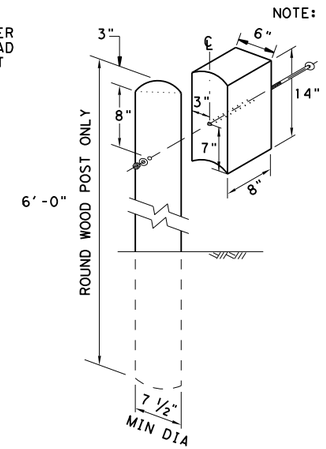

WOOD BLOCK TO ROUND WOOD POST

NOTE: TOENAIL WITH ONE 16D GALV. NAIL TO PREVENT BLOCK ROTATION.

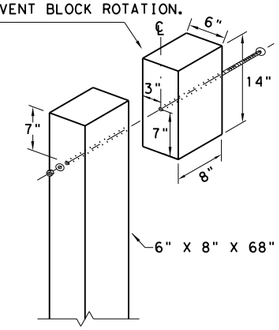

WOOD BLOCK TO RECTANGULAR WOOD POST

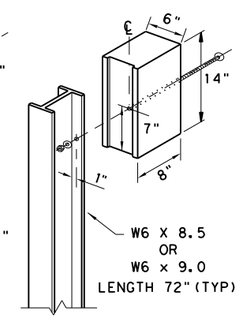

ROUTED WOOD BLOCK TO I-BEAM STEEL POST

NOTE: ** "WOOD" INDICATES DIMENSIONS FOR BOTH ROUND AND RECTANGULAR WOOD POST SYSTEMS.

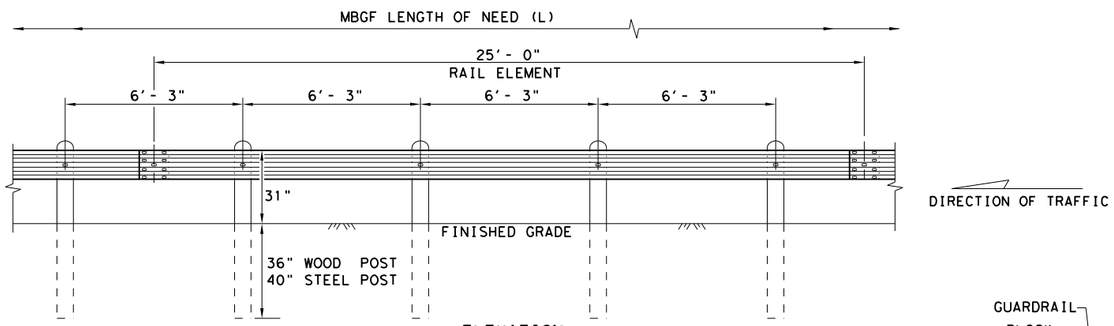

ELEVATION
MID-SPAN RAIL SPLICE

SHOWING A 25'- 0" SECTION OF W-BEAM RAIL. (SEE GENERAL NOTE 2)

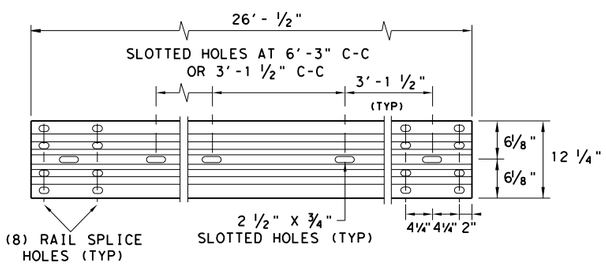

ELEVATION 25'- 0" (NOM.) W-BEAM SECTION

NOTES: SEE GENERAL NOTE 2 FOR ALLOWABLE RAIL TYPES.
SEE RAIL SPLICE DETAIL FOR REQUIRED HARDWARE.

NOTE:
FOUR TYPES OF BUTTON-HEAD GUARD RAIL BOLTS COME WITH A RECCESSED NUT.

SPLICE BOLT LENGTH — VARIES

FBB01 = 1 1/4"
FBB02 = 2"

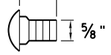

POST & BLOCK LENGTH
FBB03 = 10"
FBB04 = 18"

BUTTON HEAD BOLT

NOTE: SEE GENERAL NOTE 3 FOR SPLICE & POST BOLT DETAILS.

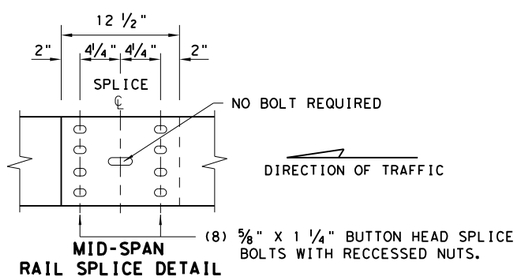

MID-SPAN RAIL SPLICE DETAIL

NOTE: GF(31), MID-SPAN RAIL SPLICES ARE REQUIRED WITH 6'-3" POST SPACINGS.

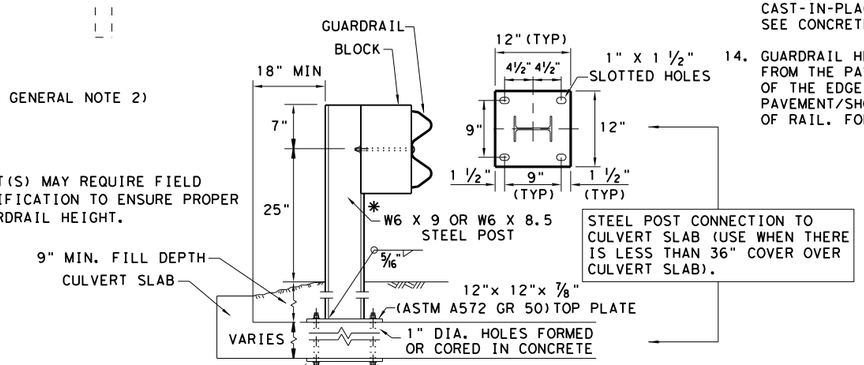

*POST(S) MAY REQUIRE FIELD MODIFICATION TO ENSURE PROPER GUARDRAIL HEIGHT.

12" X 12" X 1/4" (ASTM A36) STEEL BOTTOM PLATE WITH 1" DIA. HOLES REQUIRED WITH BOLT-THROUGH INSTALLATION.

LOW FILL CULVERT POST

NOTE: TWO INSTALLATION OPTIONS.

1. BOLT-THROUGH OPTION: REQUIRES A 6" MIN. SLAB THICKNESS. 7/8" DIA (ASTM A449) HEAVY HEX BOLTS WITH TWO HARDENED WASHER EACH AND HEAVY HEX NUTS.
   NOTE: BOLT LENGTH = SLAB PLUS 2 1/4" MIN.

2. EPOXY ANCHOR OPTION: THIS OPTION MAY ONLY BE USED IF THE CULVERT SLAB IS 9" MIN. THICK. THREADED ANCHOR RODS MUST BE 7/8" DIA. ASTM A449 OR A193 GRADE B7 WITH HEAVY HEX NUT, AND ONE HARDENED WASHER EACH. EMBED ANCHOR RODS 6" WITH HILTI HIT RE 500 EPOXY ADHESIVE. OTHER TYPE III CLASS C EPOXY ADHESIVES MEETING THE REQUIREMENTS OF DMS-6100, "EPOXIES AND ADHESIVES", MAY BE USED IF IT CAN BE DEMONSTRATED THAT THEY MEET OR EXCEED THE STRENGTH OF HILTI HIT RE 500 WITH THE SAME EMBEDMENT DEPTH AND THREADED ROD DIA. FOLLOW THE MANUFACTURER'S REQUIREMENTS FOR INSTALLING EPOXIED THREADED RODS. EXTEND RODS 1/4" MIN. BEYOND NUT.

NOTE: CULVERTS OF 25 FT. OR LESS, SEE GF(31)LS STANDARD FOR "LONG SPAN" OPTION.

GENERAL NOTES

1. THE TYPE OF POST (ROUND WOOD POST, RECTANGULAR WOOD POST, OR STEEL POST) WILL BE AS SHOWN IN THE PLANS. THE EXACT POSITION OF MBGF SHALL BE SHOWN IN THE PLANS OR AS DIRECTED BY THE ENGINEER. STEEL POSTS TO BE GALVANIZED IN ACCORDANCE WITH ITEM 445, "GALVANIZING."
2. RAIL ELEMENTS SHALL MEET THE REQUIREMENTS OF ITEM 540, "METAL BEAM GUARD FENCE" EXCEPT AS MODIFIED IN THE PLANS. THE CONTRACTOR MAY FURNISH RAIL ELEMENTS OF 25'- 0", OR 12'- 6" (NOM.) LENGTHS. RAIL ELEMENTS MAY HAVE SLOTTED HOLES AT 3'-1 1/2" C-C OR 6'-3" C-C. A SPECIAL LENGTH OF RAIL MAY BE MANUFACTURED TO ACCOMMODATE THE DOWNSTREAM ANCHOR TERMINAL (DAT) AND THE TRANSITION SECTIONS OF GUARDRAIL.
3. BUTTON HEAD "POST BOLTS & NUTS" SHALL MEET THE REQUIREMENTS OF (ASTM A307), AND SHALL BE OF SUFFICIENT LENGTH TO EXTEND THROUGH THE FULL THICKNESS OF THE NUT AND 5/8" WASHER (FWC16a) AND NOT MORE THAN 1" BEYOND IT. TRIM REMAINING BOLT LENGTH TO MEET REQUIRED LENGTH.
4. FITTINGS (BOLTS, NUTS, AND WASHERS) SHALL BE GALVANIZED IN ACCORDANCE WITH ITEM 445, "GALVANIZING." FITTINGS SHALL BE SUBSIDIARY TO THE BID ITEM.
5. CROWN SHALL BE WIDENED TO ACCOMMODATE THE METAL BEAM GUARD FENCE.
6. THE LATERAL APPROACH TO THE GUARD FENCE, SHALL HAVE A MAXIMUM SLOPE OF 1V:10H.
7. IF SHOWN ELSEWHERE IN THE PLANS OR AS DIRECTED BY THE ENGINEER, THE GUARD FENCE MAY BE FLARED AT A RATE OF 25:1 OR FLATTER.
8. UNLESS OTHERWISE SHOWN IN THE PLANS, GUARD FENCE PLACED IN THE VICINITY OF CURBS SHALL BE POSITIONED SO THAT THE FACE OF CURB IS LOCATED DIRECTLY BELOW OR BEHIND THE FACE OF THE RAIL. RAIL PLACED OVER CURBS SHALL BE INSTALLED SO THAT THE POST BOLT IS LOCATED APPROXIMATELY 25 INCHES ABOVE THE GUTTER PAN OR EDGE OF SHOULDER.
9. APPLICATIONS IN SOLID ROCK ARE ONLY ALLOWED WITH STEEL POSTS. IF SOLID ROCK IS ENCOUNTERED WITHIN 0 TO 18" OF THE FINISHED GRADE, DRILL A 24" DIA. HOLE, 24" INTO THE ROCK. IF SOLID ROCK IS ENCOUNTERED BELOW 18", DRILL A 12" DIA. HOLE, 12" INTO THE ROCK OR TO THE STANDARD EMBEDMENT DEPTH, WHICHEVER MAYBE LESS. ANY EXCESS POST LENGTH, AFTER MEETING THESE DEPTHS, MAY BE FIELD CUT TO ENSURE PROPER GUARDRAIL MOUNTING HEIGHT. BACKFILL WITH COARSE AGGREGATE MATERIAL.
10. POSTS SHALL NOT BE SET IN CONCRETE, OF ANY DEPTH.
11. SPECIAL FABRICATION WILL BE REQUIRED AT INSTALLATION LOCATIONS HAVING A CURVATURE OF LESS THAN 150 FT. RADIUS.
12. UNLESS OTHERWISE SHOWN IN THE PLANS, A COMPOSITE MATERIAL BLOCK THAT MEETS THE REQUIREMENTS OF DMS-7210, "COMPOSITE MATERIAL POSTS AND BLOCKS FOR METAL BEAM GUARD FENCE" MAY BE SUBSTITUTED FOR BLOCKS OF SIMILAR DIMENSIONS. THE CONSTRUCTION DIVISION, TXDOT MAINTAINS A MATERIAL PRODUCER LIST (MPL) FOR PRODUCERS OF MATERIALS CONFORMING TO DMS-7210 ONLY PRODUCERS ON THE MPL MAY FURNISH COMPOSITE MATERIAL BLOCKS.
13. FOR THE LOW FILL CULVERT OPTION, POSTS LOCATED PARTIALLY OR WHOLLY BETWEEN PRECAST BOX CULVERT UNITS, THE USE OF A CAST-IN-PLACE CONCRETE CLOSURE BETWEEN BOXES IS REQUIRED. THE LENGTH OF THE CAST-IN-PLACE CONCRETE CLOSURE SHALL ACCOMMODATE THE PLACEMENT OF THE LOW FILL CULVERT OPTION. SEE CONCRETE CLOSURE DETAILS ON BRIDGE STANDARD SCP-MD.
14. GUARDRAIL HEIGHT MEASUREMENT: WHEN THE GUARDRAIL IS LOCATED ABOVE PAVEMENT, MEASURE THE HEIGHT FROM THE PAVEMENT TO THE TOP OF THE W-BEAM RAIL. WHEN THE GUARDRAIL IS LOCATED UP TO 2 FT. OFF OF THE EDGE OF PAVEMENT OR FOR A PAVEMENT OVERLAY, USE A 10-FOOT STRAIGHTEDGE TO EXTEND THE PAVEMENT/SHOULDER SLOPE TO THE BACK OF RAIL, MEASURE FROM THE BOTTOM OF STRAIGHTEDGE TO THE TOP OF RAIL. FOR GUARDRAIL LOCATED DOWN A 10:1 SLOPE, MEASURE FROM THE NOMINAL TERRAIN.

NOTE: TRANSISTIONS TO BRIDGE RAILS OR TRAFFIC BARRIERS.
SEE GF(31)TL3 TR STANDARD FOR HIGH-SPEED TL-3 TRANSITIONS.
SEE GF(31)TL2 TR STANDARD FOR LOW-SPEED TL-2 TRANSITIONS.

Texas Department of Transportation — Design Division Standard

METAL BEAM GUARD FENCE TL-3 MASH COMPLIANT

GF(31)-19

FILE: gf3119.dgn	DN: TxDOT	CK: KM	DW: VP	CK: CGL/AG
©TxDOT: NOVEMBER 2019	CONT	SECT	JOB	HIGHWAY
REVISIONS	0231	03	156	IH-14
	DIST		COUNTY	SHEET NO.
	WACO		BELL	40

DATE: 7/11/2025
FILE: c:\txdot\pw_online\txdot3\patrick.jalufka\d0807894\gf3119.dgn

DISCLAIMER:
THE USE OF THIS STANDARD IS GOVERNED BY THE "TEXAS ENGINEERING PRACTICE ACT". NO WARRANTY OF ANY KIND IS MADE BY TXDOT FOR ANY PURPOSE WHATSOEVER.
TXDOT ASSUMES NO RESPONSIBILITY FOR THE CONVERSION OF THIS STANDARD TO OTHER FORMATS OR FOR INCORRECT RESULTS OR DAMAGES RESULTING FROM ITS USE.

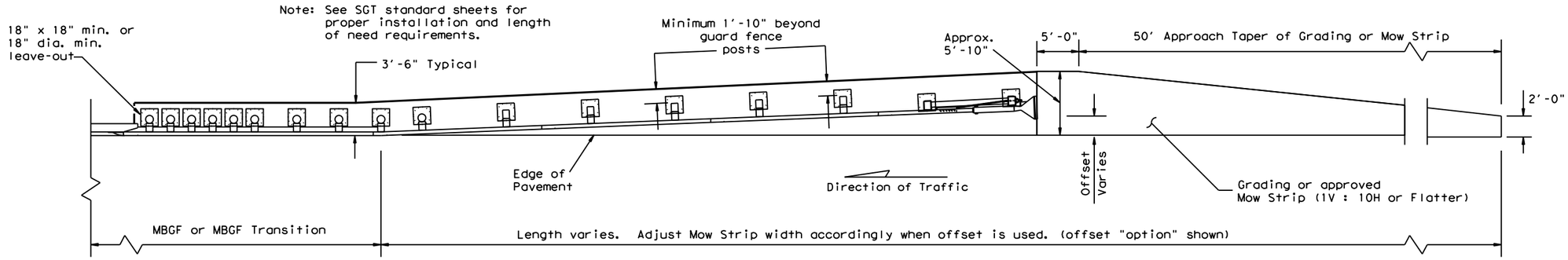

GRADING AND MOW STRIP AT GUARDRAIL END TREATMENTS

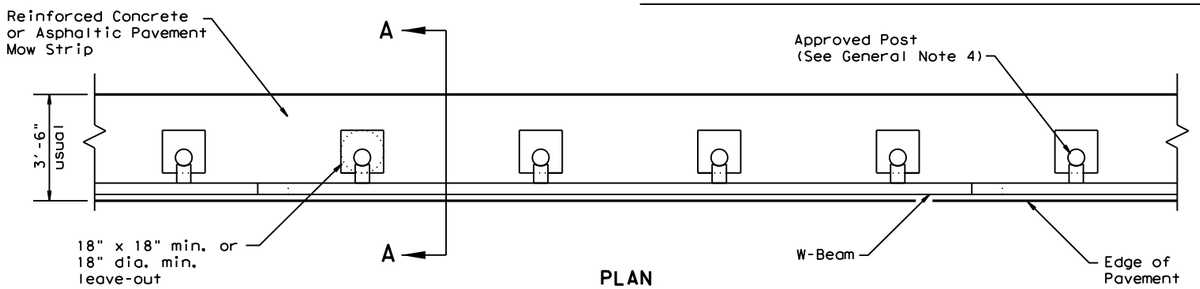

PLAN

GF(31) shown with Mow Strip (See GF(31) standard sheet for proper installation)

Note: Site Condition(s)

Site conditions may exist where grading is required for the proper installation of metal guard fence and end treatments.

Approach grading or mow strip may be decreased or eliminated, as directed by the Engineer.

GENERAL NOTES

1. This mow strip design is for use with metal beam guard fence, guard fence transitions, and guard fence end treatments. See applicable GF(31) MBGF or GF(31) Transition Standard sheet for additional information.
2. Mow strips shall be reinforced concrete with (wire mesh or synthetic fiber), as shown on the plans and will be paid for under the pertinent bid item. Reinforced concrete shall be placed in accordance with Item 432, "Riprap." The use of the synthetic fiber in lieu of steel reinforcing is acceptable, provided the fiber producer is on the Department Material Producer List (MPL), maintained by TxDOT, Construction Division.
3. The leave-out behind the post shall be a minimum of 7".
4. Only steel (W6 x 8.5 or W6 x 9.0), or 7 ½" Dia. round wood posts are acceptable for use in the mow strip. See GF(31) Standard for additional details.
5. Other curb placement options may be used. Curbs are not considered part of the mow strip and will be paid for under other pertinent bid item.
6. Thickness of the mow strip will be 4".
7. The limits of payment for reinforced concrete will include leave-outs for the posts.
8. The leave-outs shall be filled with a Grout mixture consisting of: 2719 pounds sand, 188 pounds Type 1 or II cement, and 550 pounds of water per cubic yard, with a 28-day compressive strength of approximately 230 psi or less. Provide grout with a consistency that will flow into and completely fill all voids. Due to auger size, larger leave-out dimensions are acceptable from both an impact performance and maintenance repair standpoint (Suggested Maximum leave-out of 20"). Payment for furnishing and placing the grout mixture will be subsidiary to the pay item of riprap mow strip.

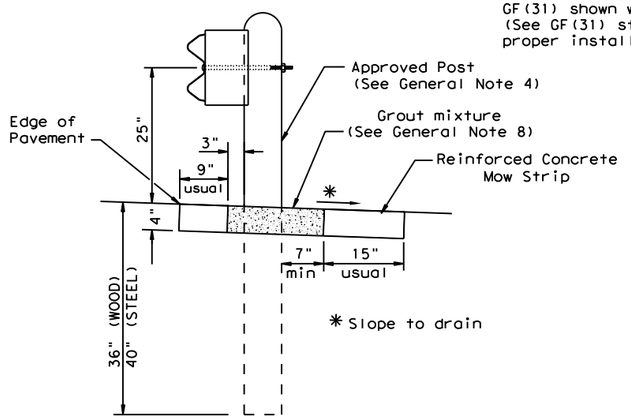

SECTION A-A

Typical

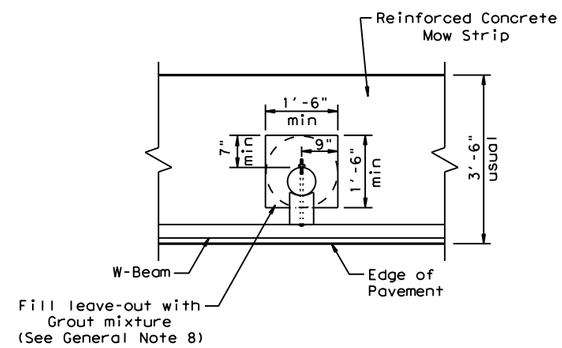

MOW STRIP DETAIL

Reinforced Concrete Mow Strip with 18" x 18" Square or 18" Dia. minimum leave-out.

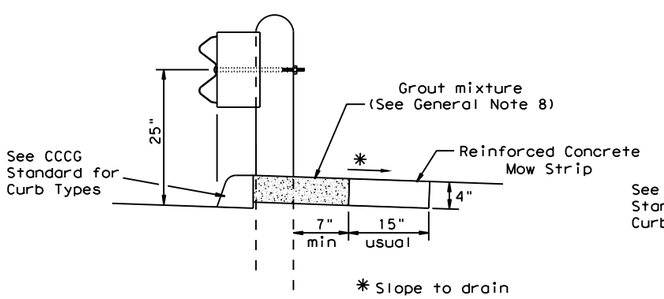

CURB OPTION (1)

This option will increase the post embedment throughout the system.

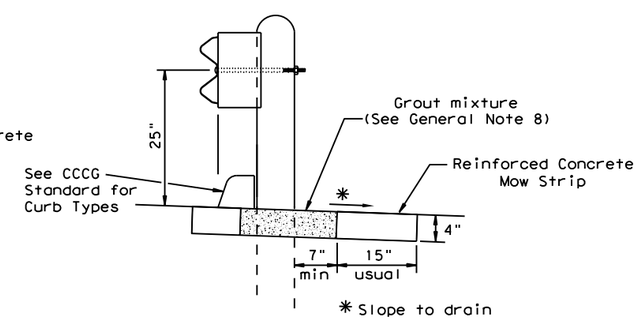

CURB OPTION (2)

Curb shown on top of mow strip

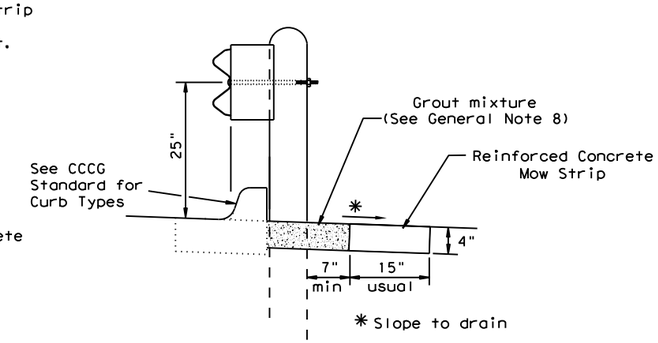

CURB OPTION (3)

Texas Department of Transportation — Design Division Standard

METAL BEAM GUARD FENCE (MOW STRIP) TL-3 MASH COMPLIANT

GF(31)MS-19

FILE: gf31ms19.dgn	DN: TxDOT	CK: KM	DW: VP	CK: CGL/AG
©TxDOT: NOVEMBER 2019	CONT	SECT	JOB	HIGHWAY
REVISIONS	0231	03	156	IH-14
	DIST		COUNTY	SHEET NO.
	WACO		BELL	41

DATE: 7/11/2025
FILE: c:\txdot\pw_online\txdot3\patrick.jalufka\d0807894\gf31ms19.dgn

DISCLAIMER:
THE USE OF THIS STANDARD IS GOVERNED BY THE "TEXAS ENGINEERING PRACTICE ACT". NO WARRANTY OF ANY KIND IS MADE BY TXDOT FOR ANY PURPOSE WHATSOEVER. TXDOT ASSUMES NO RESPONSIBILITY FOR THE CONVERSION OF THIS STANDARD TO OTHER FORMATS OR FOR INCORRECT RESULTS OR DAMAGES RESULTING FROM ITS USE.

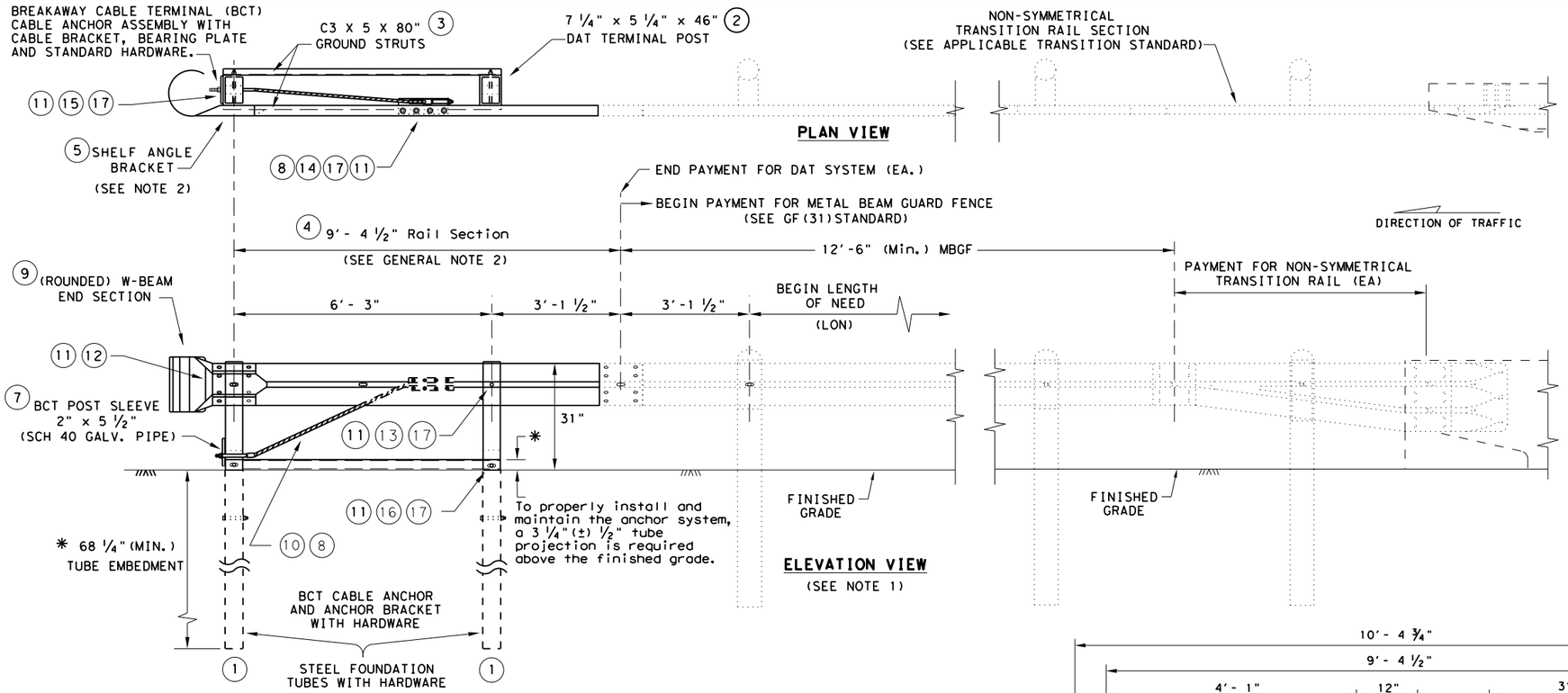

DOWNSTREAM ANCHOR TERMINAL (DAT)

NOTE: ONLY FOR DOWNSTREAM USE, WHEN LOCATED OUTSIDE THE HORIZONTAL CLEARANCE AREA OF OPPOSING TRAFFIC.

GENERAL NOTES

1. THE DETAIL SHOWN IS THE MINIMUM LENGTH OF NEED (LON) FOR A DOWNSTREAM ANCHOR TERMINAL (DAT) CONNECTED TO A CONCRETE RAIL.
2. THE RAIL SECTION AT THE END POST IS SUPPORTED BY THE SHELF ANGLE BRACKET. THE RAIL ELEMENT IS NOT ATTACHED TO THE END POST.
3. THE FOUNDATION TUBES SHALL NOT PROJECT MORE THAN 3 3/4" ABOVE THE FINISHED GRADE.
4. ALL HARDWARE FOR DAT SHALL BE ASTM A307 UNLESS OTHERWISE SHOWN.
5. REFER TO GF(31) SHEET FOR TERMINAL CONNECTION DETAILS.

MOW STRIP INSTALLATION

IF A MOW STRIP IS REQUIRED WITH THE DAT INSTALLATION THE LEAVE-OUT AREA AROUND THE STEEL FOUNDATION TUBES AND THE TWO CHANNEL STRUTS MAY BE OMITTED. THIS WILL REQUIRE A FULL POUR AT THE FOUNDATION TUBES.

#	(DAT) PARTS LIST	QTY
1	STEEL FOUNDATION TUBE	2
2	DAT TERMINAL POST	2
3	CHANNEL STRUT	2
4	TERMINAL RAIL ELEMENT	1
5	SHELF ANGLE BRACKET	1
6	BCT BEARING PLATE	1
7	BCT POST SLEEVE	1
8	GUARDRAIL ANCHOR BRACKET	1
9	(ROUNDED) W-BEAM END SECTION	1
10	BCT CABLE ANCHOR	1
11	RECESSED NUT, GUARDRAIL	20
12	1 1/4" BUTTON HEAD BOLT	4
13	10" BUTTON HEAD BOLT	2
14	5/8" X 2" HEX HEAD BOLT	8
15	5/8" X 8" HEX HEAD BOLT	4
16	5/8" X 10" HEX HEAD BOLT	2
17	5/8" FLAT WASHER	18

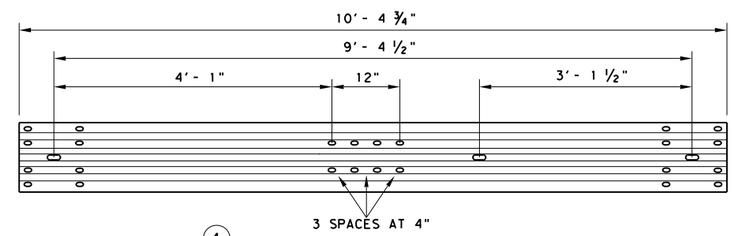

(4) TERMINAL RAIL ELEMENT FOR DAT

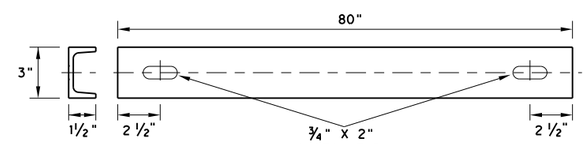

(3) CHANNEL STRUT
C3 X 5 X 80", GRADE A36

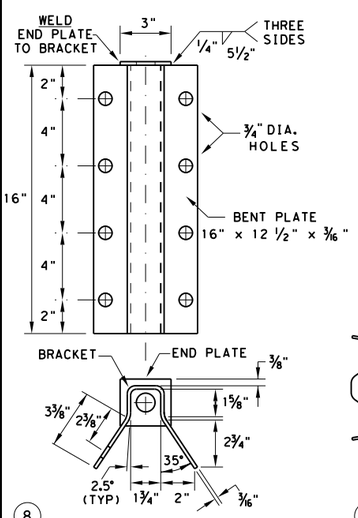

(8) GUARDRAIL ANCHOR BRACKET

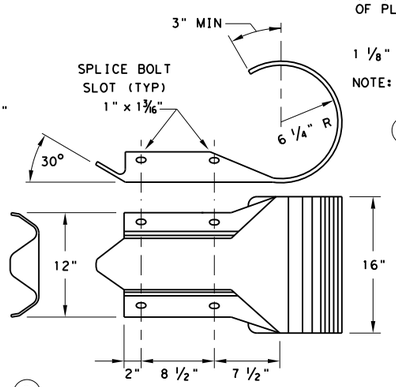

(9) W-BEAM END SECTION (ROUNDED) (12 GA.)

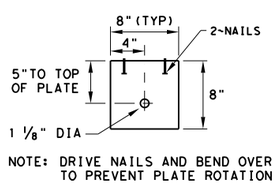

NOTE: DRIVE NAILS AND BEND OVER TO PREVENT PLATE ROTATION

(6) BEARING PLATE
8" x 8" x 5/8" ℞

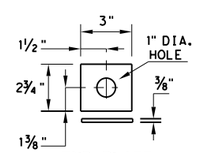

END PLATE

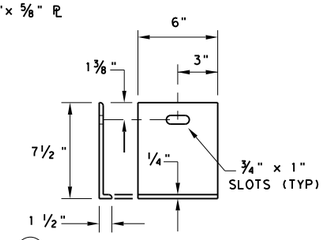

(5) SHELF ANGLE BRACKET

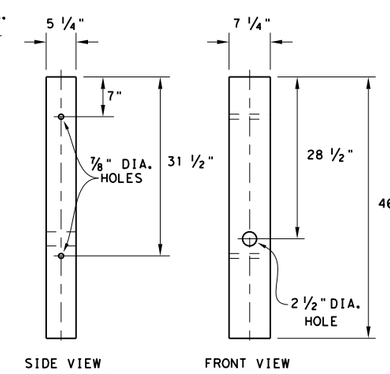

(2) TERMINAL POST
7 1/4" x 5 1/4" x 46" WOOD POST

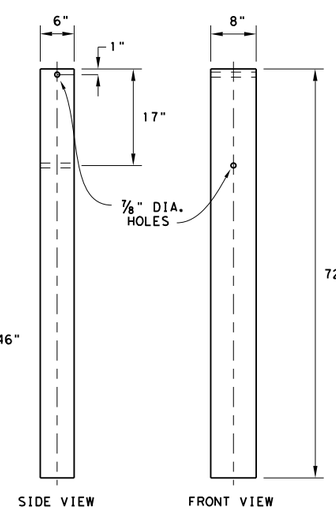

(1) STEEL FOUNDATION TUBE
6" x 8" x 1/8" x 72" STEEL TUBE

Texas Department of Transportation — Design Division Standard

METAL BEAM GUARD FENCE (DOWNSTREAM ANCHOR TERMINAL) TL-3 MASH COMPLIANT

GF(31)DAT-19

FILE: gf31dat19.dgn	DN: TxDOT	CK: KM	DW: VP	CK: CGL/AG
©TxDOT: NOVEMBER 2019	CONT	SECT	JOB	HIGHWAY
REVISIONS	0231	03	156	IH-14
	DIST		COUNTY	SHEET NO.
	WACO		BELL	42

DATE: 7/11/2025
FILE: c:\txdot\pw_online\txdot3\patrick.jalufka\d0807894\gf31dat19.dgn

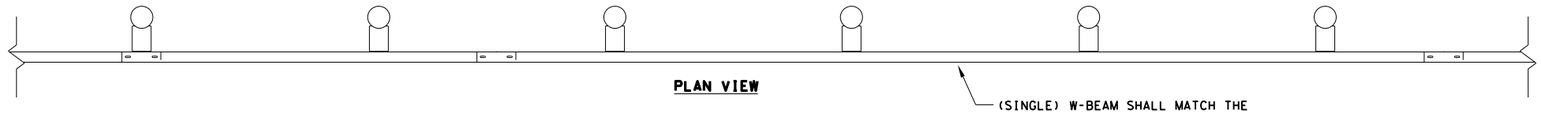

PLAN VIEW

(SINGLE) W-BEAM SHALL MATCH THE GAUGE OF THE ADJACENT RUN OF MBGF.

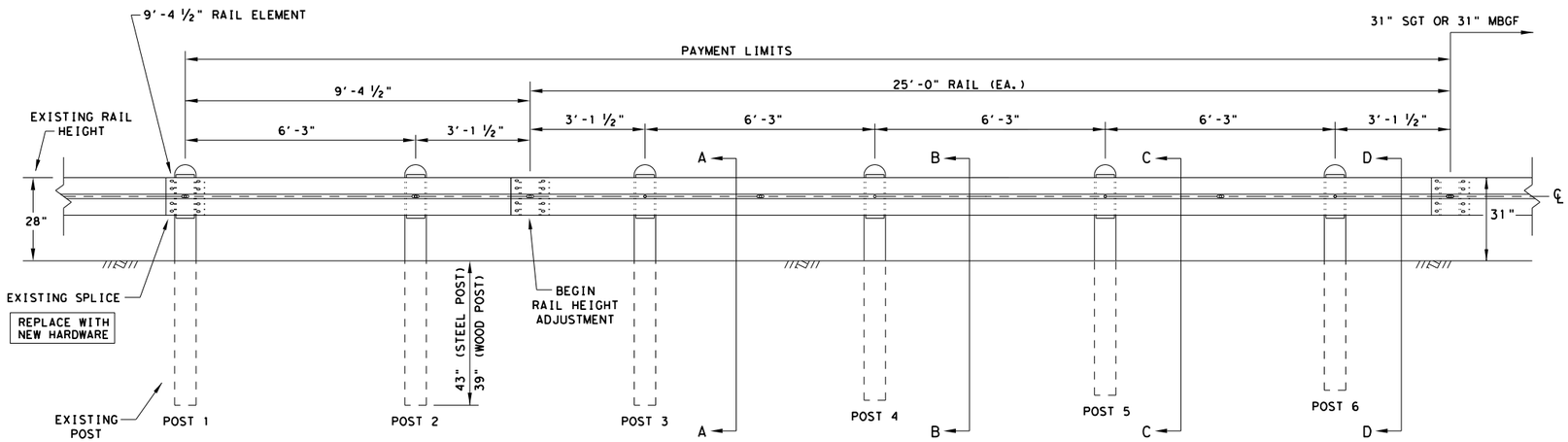

ELEVATION VIEW

✳ "WOOD" INDICATES DIMENSIONS FOR BOTH ROUND AND RECTANGULAR WOOD POST SYSTEMS.

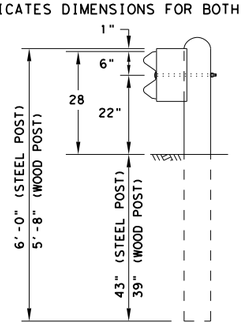

SECTION A-A

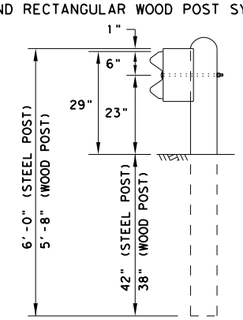

SECTION B-B

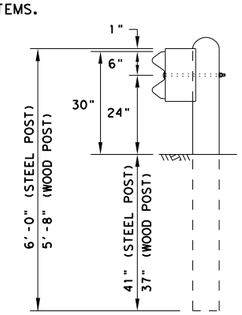

SECTION C-C

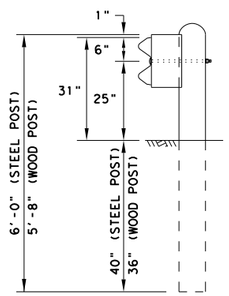

SECTION D-D

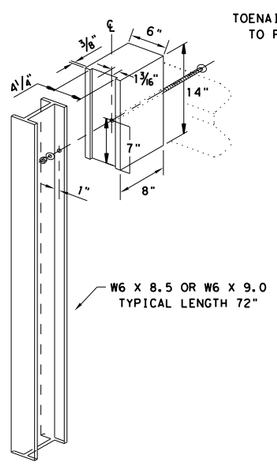

ROUTED WOOD BLOCK-OUT TO STEEL POST

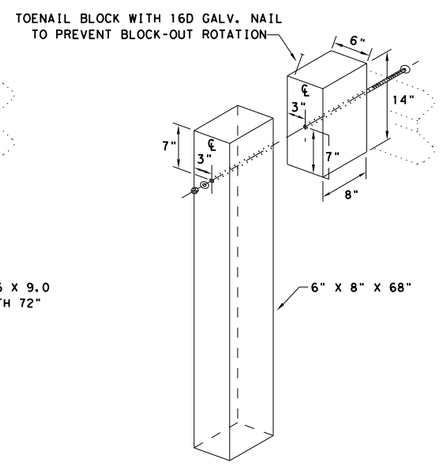

WOOD BLOCK TO RECTANGULAR WOOD POST

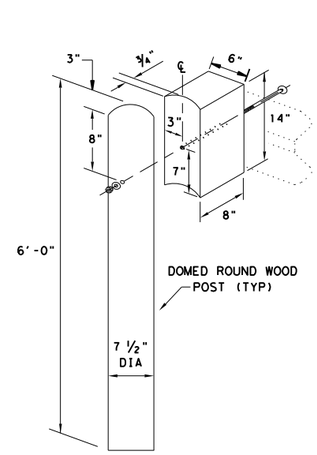

WOOD BLOCK-OUT TO DOMED ROUND WOOD POST

GENERAL NOTES

1. THE TYPE OF POST (ROUND WOOD POST, RECTANGULAR WOOD POST, OR STEEL POST) WILL BE AS SHOWN IN THE PLANS. THE EXACT POSITION OF MBGF SHALL BE AS SHOWN IN THE PLANS OR AS DIRECTED BY THE ENGINEER. STEEL POSTS TO BE GALVANIZED IN ACCORDANCE WITH ITEM 445, "GALVANIZING."
2. RAIL ELEMENT SHALL MEET THE REQUIREMENTS OF ITEM 540, "METAL BEAM GUARD FENCE" EXCEPT AS MODIFIED IN THE PLANS. THE CONTRACTOR MAY FURNISH RAIL ELEMENTS OF 25'-0", OR 12'-6" (NOM.) LENGTHS. RAIL ELEMENTS MAY HAVE SLOTTED HOLES AT 3'-1 ½" C-C OR 6'-3" C-C. A SPECIAL LENGTH OF RAIL MAY BE MANUFACTURED TO ACCOMMODATE THE TRANSITION SECTIONS OF GUARDRAIL.
3. BUTTON HEAD "POST" BOLTS (ASTM A307) SHALL BE OF SUFFICIENT LENGTH TO EXTEND THROUGH THE FULL THICKNESS OF THE NUT (ASTM A563) AND ⅝" ROUND WASHER (ASTM F436) AND NOT MORE THAN 1" BEYOND IT. BUTTON HEAD "SPLICE" BOLTS (ASTM A307) ARE ⅝" X 1-¼" WITH ⅝" NUTS (ASTM A563).
4. FITTINGS (BOLTS, NUTS, AND WASHERS) SHALL BE GALVANIZED IN ACCORDANCE WITH ITEM 445, "GALVANIZING." FITTINGS SHALL BE SUBSIDIARY TO THE BID ITEM REQUIRING CONSTRUCTION OF THE TRANSITION.
5. CROWN SHALL BE WIDENED TO ACCOMMODATE THE METAL BEAM GUARD FENCE.
6. THE LATERAL APPROACH TO THE GUARD FENCE, SHALL HAVE A MAXIMUM SLOPE OF 1V:10H.
7. IF SHOWN ELSEWHERE IN THE PLANS OR AS DIRECTED BY THE ENGINEER, THE GUARD FENCE MAY BE FLARED AT A RATE OF 25:1 OR FLATTER.
8. APPLICATIONS IN SOLID ROCK ARE ONLY ALLOWED WITH STEEL POSTS. SEE GF(31) STANDARD FOR INSTALLATION GUIDANCE.
9. POSTS SHALL NOT BE SET IN CONCRETE.
10. UNLESS OTHERWISE SHOWN IN THE PLANS, A COMPOSITE MATERIAL BLOCK THAT MEETS THE REQUIREMENTS OF DMS-7210, "COMPOSITE MATERIAL POSTS AND BLOCKS FOR METAL BEAM GUARD FENCE" MAY BE SUBSTITUTED FOR BLOCKS OF SIMILAR DIMENSIONS. THE CONSTRUCTION DIVISION, TXDOT MAINTAINS A MATERIAL PRODUCER LIST (MPL) FOR PRODUCERS OF MATERIALS CONFORMING TO DMS-7210. ONLY PRODUCERS ON THE MPL MAY FURNISH COMPOSITE MATERIAL BLOCKS.
11. REFER TO STANDARD GF(31) FOR ADDITIONAL DETAILS.
12. RAIL HEIGHT ADJUSTMENT IS ASSESSED AT TL-3 MASH COMPLIANT FOR STEEL POST HEIGHT TRANSITION TO 28" STEEL POST GUARDRAIL.

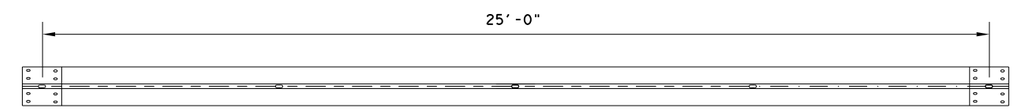

25'-0" (NOM.) W-BEAM RAIL ELEMENT

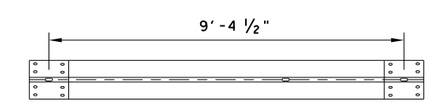

9'-4 ½" (NOM.) W-BEAM RAIL ELEMENT

HARDWARE LIST

	QTY	DESCRIPTION
POST AND BLOCK-OUT TYPES AVAILABLE	1	9'-4 ½" W-BEAM RAIL ELEMENT 12GA.
	1	25'-0" W-BEAM RAIL ELEMENT 12GA. (TYP)
	6	7 ½" DIA X 6'-0" DOMED ROUND WOOD POSTS (TYP)
	6	6" X 8" X 68" RECTANGULAR WOOD POSTS (TYP)
	6	W6 X 8.5 OR W6 X 9 X 72" STEEL POSTS (TYP)
	6	6" X 8" X 14" WOOD BLOCKS OR COMPOSITE (TYP)
FOR WOOD POST	6	⅝" X 18" GUARDRAIL BOLTS WITH NUTS (FBB04)
	6	⅝" ROUND WASHERS (ASTM F436) (FWC16a)
FOR STEEL POST	6	⅝" X 10" GUARDRAIL BOLTS WITH NUTS (FBB03)
	24	⅝" X 1-¼" GUARDRAIL SPLICE BOLTS WITH DOUBLE RECESSED NUTS (ASTM A563) (FBB01)

NOTE: HARDWARE SHALL MEET THE FOLLOWING REQUIREMENTS.

GUARDRAIL POST BOLTS (ASTM A307 GR.A)
GUARDRAIL ROUND WASHERS (ASTM F436)
GUARDRAIL DOUBLE RECESSED NUTS (ASTM A563)
GUARDRAIL SPLICE BOLTS (ASTM A307 GR.A)
GUARDRAIL SPLICE NUTS (ASTM A563)

Texas Department of Transportation — Design Division Standard

METAL BEAM GUARD FENCE RAIL HEIGHT ADJUSTMENT (28" TO 31") TL-3 MASH COMPLIANT

RAIL-ADJ(A)-19

FILE: railadja19	DN: TxDOT	CK: KM	DW: VP	CK: CGL/AG
© TxDOT: NOVEMBER 2019	CONT	SECT	JOB	HIGHWAY
REVISIONS	0231	03	156	IH-14
	DIST	COUNTY		SHEET NO.
	WACO	BELL		43

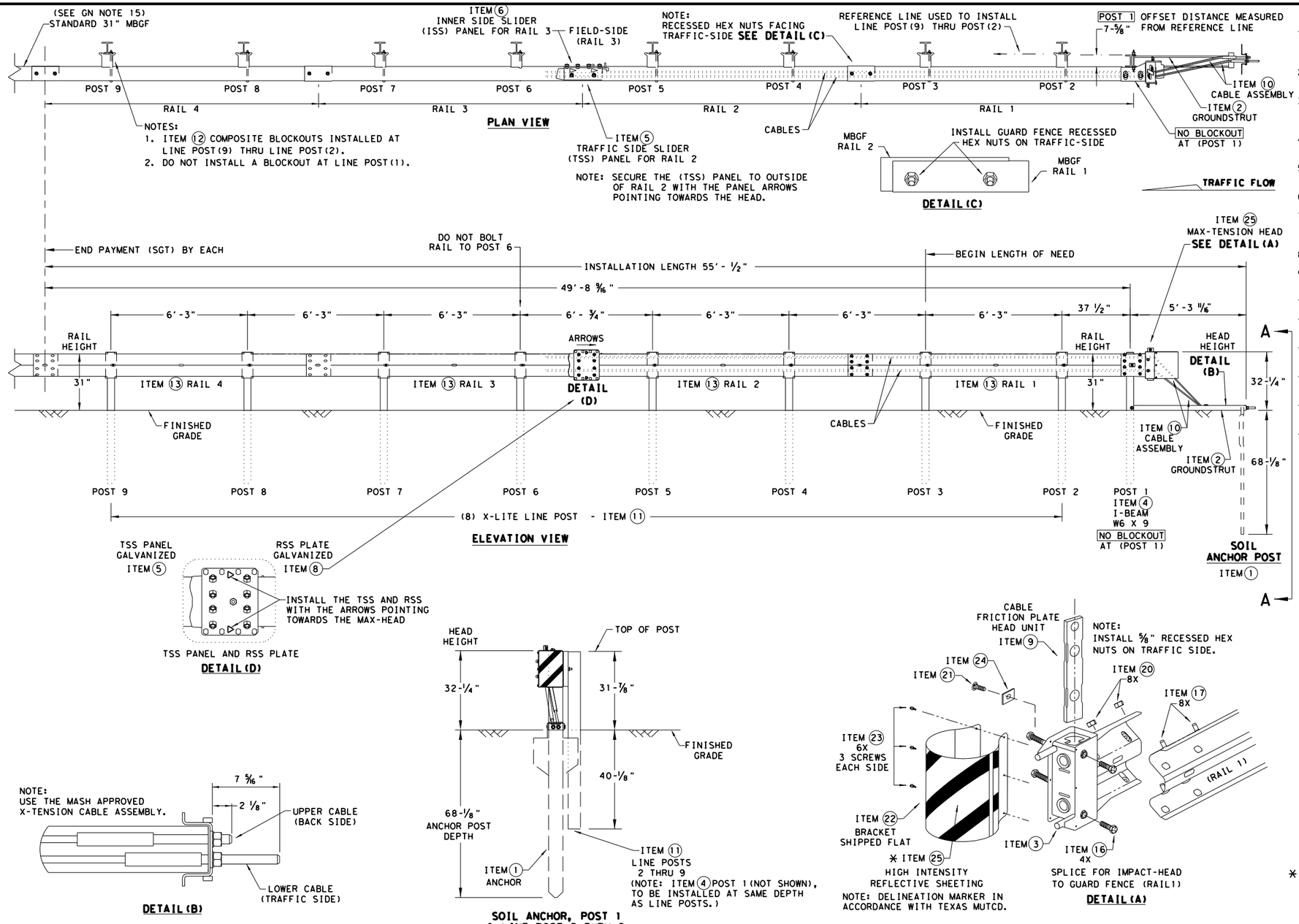

TSS PANEL AND RSS PLATE

DETAIL (D)

SOIL ANCHOR, POST 1 & LINE POST 2 THRU 9

SECTION VIEW A-A

DETAIL (B)

DETAIL (A)

GENERAL NOTES

1. FOR SPECIFIC INFORMATION REGARDING INSTALLATION AND TECHNICAL GUIDANCE OF THE SYSTEM, CONTACT: LINDSAY TRANSPORTATION SOLUTIONS (LTS) - BARRIER SYSTEMS, INC. AT (707) 374-6800
2. FOR INSTALLATION, REPAIR, & MAINTENANCE REFER TO THE; MAX-TENSION INSTALLATION INSTRUCTION MANUAL. P/N MANMAX REV D (ECN 3516).
3. APPLY HIGH INTENSITY REFLECTIVE SHEETING, "OBJECT MARKER" ON THE FRONT FACE OF THE DEVICE PER MANUFACTURE'S RECOMMENDATIONS. OBJECT MARKER SHALL CONFORM TO THE STANDARDS REQUIRED IN TEXAS MUTCD.
4. FOR POST (LEAVE-OUT) INSTALLATION AND GUIDANCE SEE TXDOT'S LATEST ROADWAY MOW STRIP STANDARD.
5. ALL STEEL COMPONENTS ARE GALVANIZED PER ASTM A123 OR EQUIVALENT UNLESS OTHERWISE STATED.
6. SYSTEM SHOWN USING STEEL WIDE FLANGE POST WITH COMPOSITE BLOCKOUTS.
7. COMPOSITE MATERIAL BLOCKOUT THAT MEETS THE REQUIREMENTS OF DMS-7210, MAY BE SUBSTITUTED FOR BLOCKOUTS SIMILAR DIMENSIONS. SEE CONSTRUCTION DIVISION MATERIAL PRODUCER LIST(MPL)FOR CERTIFIED PRODUCERS.
8. REFER TO INSTALLATION MANUAL FOR SPECIFIC PANEL LAPPING GUIDANCE.
9. IF SOLID ROCK IS ENCOUNTERED SEE THE MANUFACTURER'S INSTALLATION MANUAL FOR INSTALLATION GUIDANCE.
10. POSTS SHALL NOT BE SET IN CONCRETE.
11. A DRIVING CAP WITH A TIMBER OR PLASTIC INSERT SHALL BE USED WHEN DRIVING POST TO PREVENT DAMAGE TO THE GALVANIZING ON TOP OF THE POST.
12. MAX-TENSION SYSTEM SHALL NEVER BE INSTALLED WITHIN A CURVED SECTION OF GUARDRAIL.
13. IF A DELINEATION MARKER IS REQUIRED, MARKER SHALL BE IN ACCORDANCE WITH TEXAS MUTCD.
14. THE SYSTEM IS SHOWN WITH 12'-6" MBGF PANELS, 25'-0" MBGF PANELS ARE ALSO ALLOWED.
15. A MINIMUM OF 12'-6" OF 12GA. MBGF IS REQUIRED IMMEDIATELY DOWNSTREAM OF THE MAX-TENSION SYSTEM.

	ITEM #	PART NUMBER	DESCRIPTION	QTY
	1	BSI-1610060-00	SOIL ANCHOR - GALVANIZED	1
	2	BSI-1610061-00	GROUND STRUT - GALVANIZED	1
	3	BSI-1610062-00	MAX-TENSION IMPACT HEAD	1
	4	BSI-1610063-00	W6x9 I-BEAM POST 6FT.-GALVANIZED	1
	5	BSI-1610064-00	TSS PANEL - TRAFFIC SIDE SLIDER	1
	6	BSI-1610065-00	ISS PANEL - INNER SIDE SLIDER	1
	7	BSI-1610066-00	TOOTH - GEOMET	1
	8	BSI-1610067-00	RSS PLATE - REAR SIDE SLIDER	1
	9	B061058	CABLE FRICTION PLATE - HEAD UNIT	1
	10	BSI-1610069-00	CABLE ASSEMBLY - MASH X-TENSION	2
	11	BSI-1012078-00	X-LITE LINE POST-GALVANIZED	8
	12	B090534	8" W-BEAM COMPOSITE-BLOCKOUT XT110	8
	13	BSI-4004386	12'-6" W-BEAM GUARD FENCE PANELS 12GA.	4
	14	BSI-1102027-00	X-LITE SQUARE WASHER	1
	15	BSI-2001886	5/8" X 7" THREAD BOLT HH (GR.5)GEOMET	1
	16	BSI-2001885	3/4" X 3" ALL-THREAD BOLT HH (GR.5)GEOMET	4
	17	4001115	5/8" X 1 1/4" GUARD FENCE BOLTS (GR.2)MGAL	48
	18	2001840	5/8" X 10" GUARD FENCE BOLTS MGAL	8
	19	2001636	5/8" WASHER F436 STRUCTURAL MGAL	2
	20	4001116	5/8" RECESSED GUARD FENCE NUT (GR.2)MGAL	59
	21	BSI-2001888	5/8" X 2" ALL THREAD BOLT (GR.5)GEOMET	1
	22	BSI-1701063-00	DELINEATION MOUNTING (BRACKET)	1
	23	BSI-2001887	1/4" X 3/4" SCREW SD HH 410SS	7
	24	4002051	GUARDRAIL WASHER RECT AASHTO FWR03	1
*	25	SEE NOTE BELOW	HIGH INTENSITY REFLECTIVE SHEETING	1
**	26	4002337	8" W-BEAM TIMBER-BLOCKOUT, PDB01B	8
**	27	BSI-4004431	25' W-BEAM GUARDRAIL PANEL,8-SPACE,12GA.	2
	28	MANMAX Rev-(D)	MAX-TENSION INSTALLATION INSTRUCTIONS	1

* TO BE PROVIDED BY DISTRIBUTOR OR CONTRACTOR.

** ALTERNATIVE ITEMS NOT SHOWN.
ITEM(26) 8" WOOD-BLOCKOUTS
ITEM(27) 25'GUARD FENCE PANELS

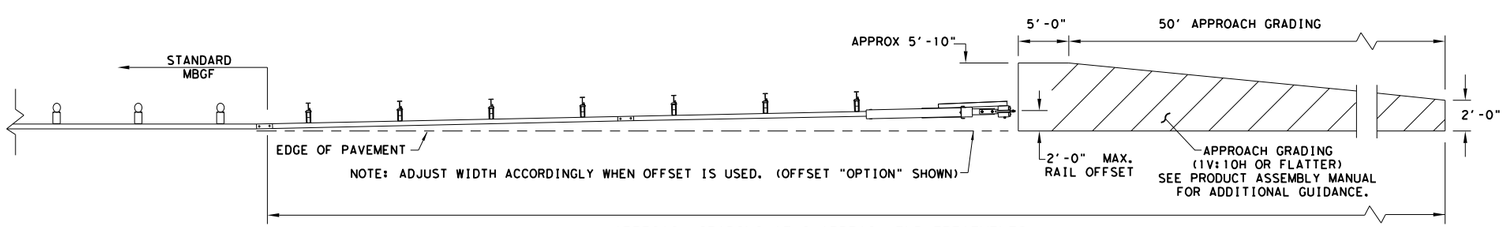

NOTE: TXDOT GENERIC APPROACH GRADING LAYOUT USED FOR ALL TANGENT TYPE END TREATMENTS.

APPROACH GRADING AT GUARDRAIL END TREATMENTS

NOTE:
THIS STANDARD IS A BASIC REPRESENTATION OF THE MAX-TENSION END TERMINAL, IT IS NOT INTENDED TO REPLACE THE PRODUCT DESCRIPTION ASSEMBLY MANUAL.

Texas Department of Transportation — Design Division Standard

MAX-TENSION END TERMINAL
MASH - TL-3

SGT(11S)31-18

FILE: sgt11s3118.dgn	DN: TxDOT	CK: KM	DW: TxDOT	CK: CL
© TxDOT: FEBRUARY 2018	CONT	SECT	JOB	HIGHWAY
REVISIONS	0231	03	156	IH-14
	DIST	COUNTY		SHEET NO.
	WACO	BELL		44

DISCLAIMER:
The use of this standard is governed by the "Texas Engineering Practice Act". No warranty of any kind is made by TxDOT for any purpose whatsoever. TxDOT assumes no responsibility for the conversion of this standard to other formats or for incorrect results or damages resulting from its use.

DATE: 7/11/2025
FILE: c:\txdot\pw_online\txdot3\patrick.jalufka\d0807894\sgt11s3118.dgn

DISCLAIMER:
THE USE OF THIS STANDARD IS GOVERNED BY THE "TEXAS ENGINEERING PRACTICE ACT". NO WARRANTY OF ANY KIND IS MADE BY TXDOT FOR ANY PURPOSE WHATSOEVER. TXDOT ASSUMES NO RESPONSIBILITY FOR THE CONVERSIONOF THIS STANDARD TO OTHER FORMATS OR FOR INCORRECT RESULTS OR DAMAGES RESULTING FROM ITS USE.

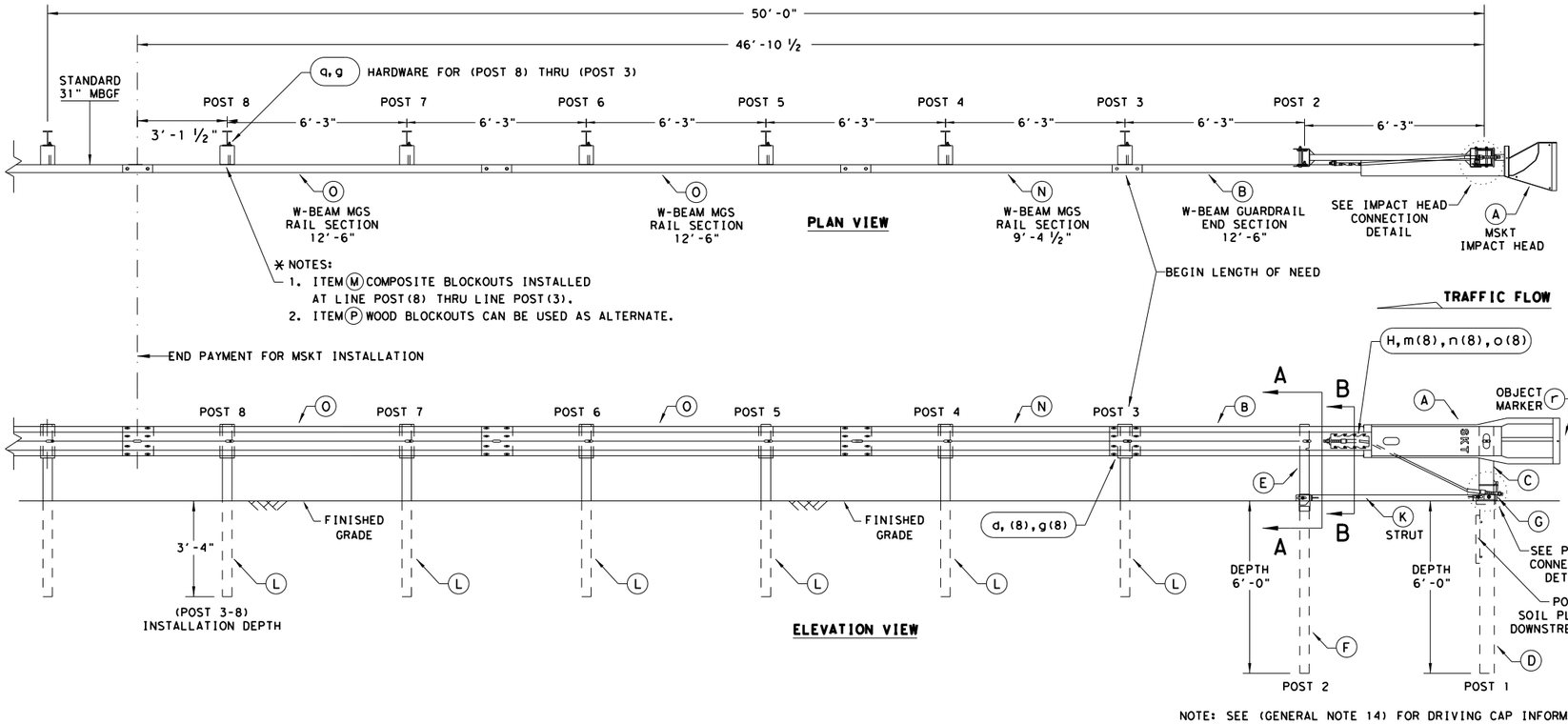

NOTE: SEE (GENERAL NOTE 14) FOR DRIVING CAP INFORMATION.

GENERAL NOTES

1. FOR SPECIFIC INFORMATION REGARDING INSTALLATION AND TECHNICAL GUIDANCE OF THE SYSTEM, CONTACT: ROAD SYSTEMS, INC. (432)263-2435. 3616 OLD HOWARD COUNTY AIRPORT, BIG SPRING, TX 79720
2. FOR INSTALLATION, REPAIR AND MAINTENANCE REFER TO THE; MSKT END TERMINAL, PRODUCT DESCRIPTION ASSEMBLY MANUAL (PUBLICATION~062717).
3. APPLY HIGH INTENSITY REFLECTIVE SHEETING, "OBJECT MARKER" ON THE FRONT FACE OF THE DEVICE PER MANUFACTURER'S RECOMMENDATIONS. OBJECT MARKER SHALL CONFORM TO THE STANDARDS REQUIRED IN TEXAS MUTCD.
4. FOR POST (LEAVE-OUT) INSTALLATION AND GUIDANCE SEE TXDOT'S LATEST ROADWAY MOW STRIP STANDARD.
5. HARDWARE (BOLTS, NUTS, & WASHERS) SHALL BE GALVANIZED IN ACCORDANCE WITH ITEM 445, "GALVANIZING". FITTINGS SHALL BE SUBSIDIARY TO THE BID ITEM.
6. SYSTEM SHOWN USING STEEL WIDE FLANGE POSTS WITH COMPOSITE BLOCKOUTS.
7. A COMPOSITE MATERIAL BLOCKOUTS THAT MEETS THE REQUIREMENTS OF DMS-7210, MAY BE SUBSTITUTED FOR BLOCKOUTS OF SIMILAR DIMENSIONS. SEE CONSTRUCTION DIVISION MATERIAL PRODUCER LIST (MPL) FOR CERTIFIED PRODUCERS.
8. IF SOLID ROCK IS ENCOUNTERED IN THE AREA OF (POST 1) AND / OR (POST 2) CONTACT THE MANUFACTURER, & REFER TO THE LATEST ROADWAY MBGF STANDARD FOR INSTALLATION GUIDANCE.
9. POSTS SHALL NOT BE SET IN CONCRETE.
10. SYSTEM MUST BE ATTACHED TO STANDARD 31" MBGF.
11. UNDER NO CIRCUMSTANCES SHALL THE GUARDRAIL WITHIN THE MSKT SYSTEM BE CURVED.
12. A FLARE RATE OF UP TO 25:1 MAY BE USED TO PREVENT THE TERMINAL HEAD FROM ENCROACHING ON THE SHOULDER. THE FLARE MAY BE DECREASED OR ELIMINATED FOR SPECIFIC INSTALLATIONS, IF DIRECTED BY THE ENGINEER.
13. THE SYSTEM IS SHOWN WITH TWO 12'-6" MBGF PANELS, ONE 25'-0" MBGF PANEL IS ALSO ALLOWED IN THEIR PLACE.
14. A DRIVING CAP WITH A TIMBER OR PLASTIC INSERT SHALL BE USED WHEN DRIVING POSTS 3-8 TO PREVENT DAMAGE TO THE GALVANIZING ON TOP OF THE POST. SPECIAL DRIVING CAP TO BE USED ON LOWER POSTS 1 & 2 TO PREVENT DAMAGE TO THE WELDED PLATES.

ITEM	QTY	MAIN SYSTEM COMPONENTS	ITEM NUMBERS
A	1	MSKT IMPACT HEAD	MS3000
B	1	W-BEAM GUARDRAIL END SECTION, 12 Ga.	SF1303
C	1	POST 1 - TOP (6" X 6" X ⅛" TUBE)	MTPHP1A
D	1	POST 1 - BOTTOM (6' W6X15)	MTPHP1B
E	1	POST 2 - ASSEMBLY TOP	UHP2A
F	1	POST 2 - ASSEMBLY BOTTOM (6' W6X9)	HP2B
G	1	BEARING PLATE	E750
H	1	CABLE ANCHOR BOX	S760
J	1	BCT CABLE ANCHOR ASSEMBLY	E770
K	1	GROUND STRUT	MS785
L	6	W6x9 OR W6x8.5 STEEL POST	P621
M	6	COMPOSITE BLOCKOUTS	CBSP-14
N	1	W-BEAM MGS RAIL SECTION (9'-4 ½")	G12025
O	2	W-BEAM MGS RAIL SECTION (12'-6")	G1203A
P	6	WOOD BLOCKOUT 6" X 8" X 14"	P675
Q	1	W-BEAM MGS RAIL SECTION (25'-0")	G1209
		SMALL HARDWARE	
a	2	5/16" x 1" HEX BOLT (GRD 5)	B5160104A
b	4	5/16" WASHER	W0516
c	2	5/16" HEX NUT	N0516
d	25	⅝" Dia. x 1 ¼" SPLICE BOLT (POST 2)	B580122
e	2	⅝" Dia. x 9" HEX BOLT (GRD A449)	B580904A
f	3	⅝" WASHER	W050
g	33	⅝" Dia. H.G.R NUT	N050
h	1	¾" Dia. x 8 ½" HEX BOLT (GRD A449)	B340854A
j	1	¾" Dia. HEX NUT	N030
k	2	1 ANCHOR CABLE HEX NUT	N100
l	2	1 ANCHOR CABLE WASHER	W100
m	8	½" x 1 ¼" A325 BOLT WITH CAPTIVE WASHER	SB12A
n	8	½" STRUCTURAL NUTS	N012A
o	8	1 1/16" O.D. x 9/16" I.D. STRUCTURAL WASHERS	W012A
p	1	BEARING PLATE RETAINER TIE	CT-100ST
q	6	⅝" x 10" H.G.R. BOLT	B581002
r	1	OBJECT MARKER 18" X 18"	E3151

SEE NOTES: ✱

ALTERNATIVE ITEMS NOT SHOWN. ✱✱
✱ ITEM(P) 8" WOOD-BLOCKOUT
✱✱ ITEM(Q) 25'GUARD FENCE PANEL

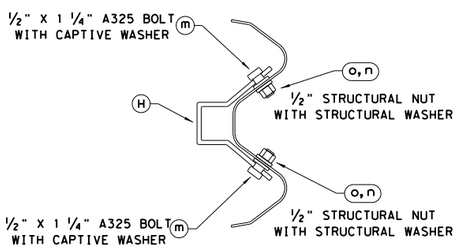

SECTION B-B
ANCHOR BRACKET

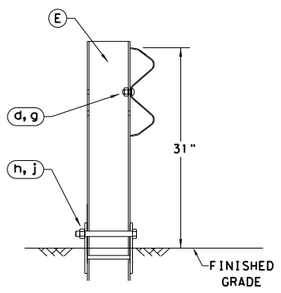

POST 2
SECTION A-A

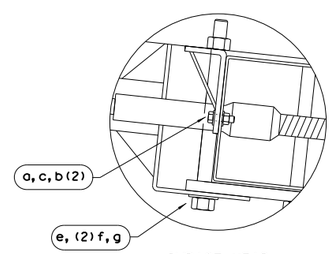

IMPACT HEAD
CONNECTION DETAIL

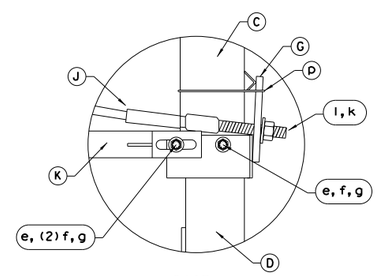

POST 1
CONNECTION DETAIL

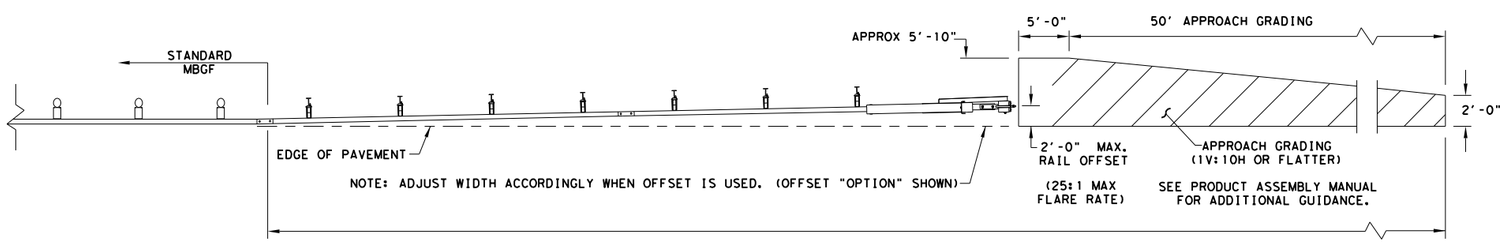

NOTE: ADJUST WIDTH ACCORDINGLY WHEN OFFSET IS USED. (OFFSET "OPTION" SHOWN)

APPROACH GRADING AT GUARDRAIL END TREATMENTS

NOTE: TXDOT GENERIC APPROACH GRADING LAYOUT USED FOR ALL TANGENT TYPE END TREATMENTS.

NOTE: THIS STANDARD IS A BASIC REPRESENTATION OF THE MSKT END TERMINAL, IT IS NOT INTENDED TO REPLACE THE PRODUCT DESCRIPTION ASSEMBLY MANUAL.

Texas Department of Transportation — Design Division Standard

SINGLE GUARDRAIL TERMINAL
MSKT-MASH-TL-3
SGT(12S)31-18

FILE: sgt12s3118.dgn	DN: TxDOT	CK: KM	DW: VP	CK: CL	
© TxDOT: APRIL 2018	CONT	SECT	JOB	HIGHWAY	
REVISIONS	0231	03	156	IH-14	
	DIST	COUNTY		SHEET NO.	
	WACO	BELL		45	

DATE: 7/11/2025
FILE: c:\txdot\pw_online\txdot3\patrick.jalufka\d0807894\sgt12s3118.dgn

DISCLAIMER:
THE USE OF THIS STANDARD IS GOVERNED BY THE "TEXAS ENGINEERING PRACTICE ACT". NO WARRANTY OF ANY KIND IS MADE BY TXDOT FOR ANY PURPOSE WHATSOEVER. TXDOT ASSUMES NO RESPONSIBILITY FOR THE CONVERSION OF THIS STANDARD TO OTHER FORMATS OR FOR INCORRECT RESULTS OR DAMAGES RESULTING FROM ITS USE.

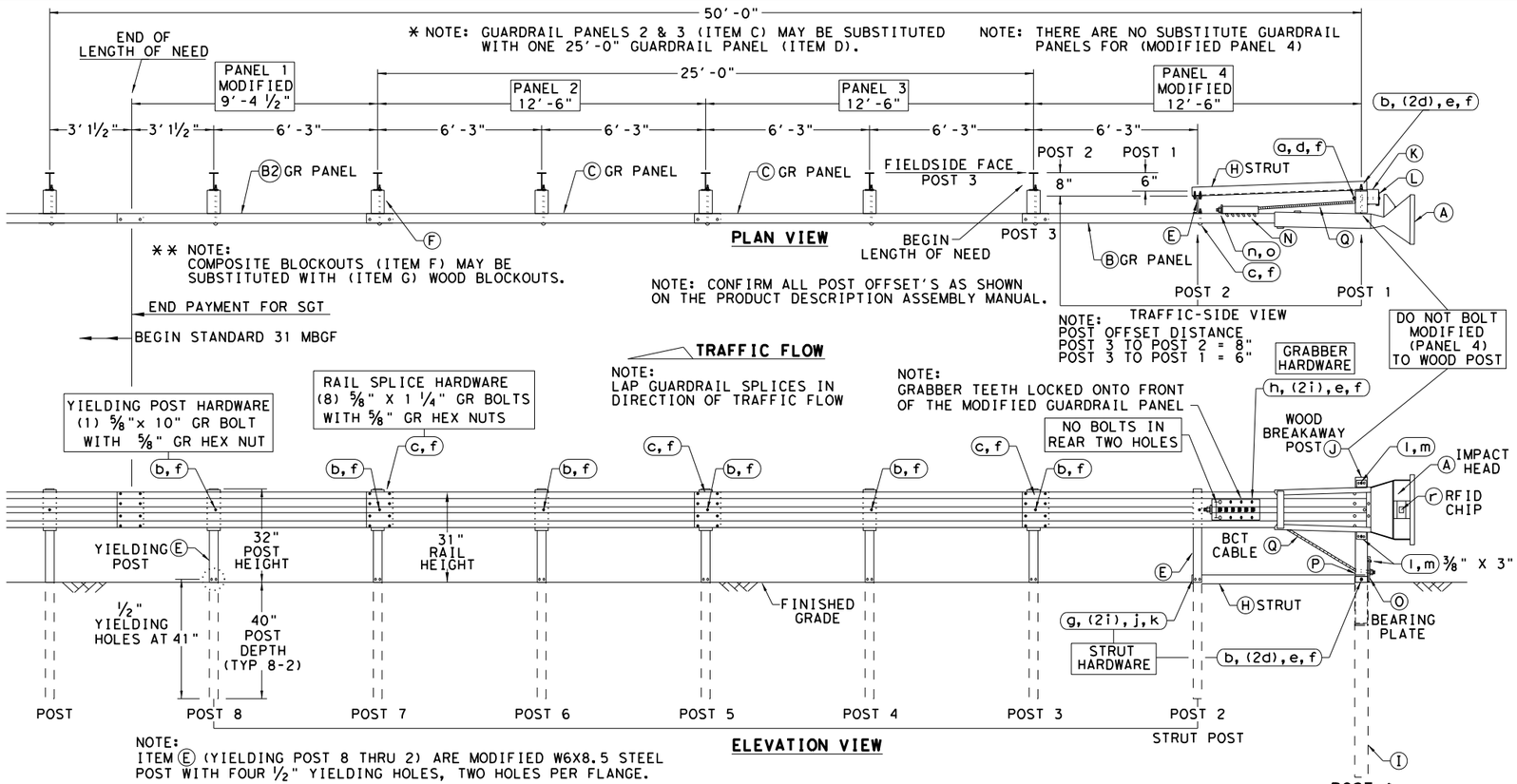

GENERAL NOTES

1. FOR SPECIFIC INFORMATION REGARDING INSTALLATION AND TECHNICAL GUIDANCE OF THE SYSTEM, CONTACT: SPIG INDUSTRY, INC. AT 1(267) 644-9510. 14675 INDUSTRIAL PARK RD; BRISTOL, VA 24202
2. FOR INSTALLATION, REPAIR AND MAINTENANCE REFER TO THE MANUFACTURER'S; SGET END TERMINAL, PRODUCT DESCRIPTION ASSEMBLY MANUAL.
3. MANUFACTURER WILL APPLY HIGH INTENSITY REFLECTIVE SHEETING, "OBJECT MARKER" TO THE FACE PLATE OF THE DEVICE PER MANUFACTURER'S RECOMMENDATIONS. THE OBJECT MARKER SHALL CONFORM TO THE STANDARDS REQUIRED IN TEXAS MUTCD.
4. THE NOMINAL HEIGHT OF THE GUARDRAIL BEAM IS 31 INCHES WITH A TOLERANCE OF +/- ONE INCH.
5. FOR POST (LEAVE-OUT) INSTALLATION AND GUIDANCE SEE TXDOT'S LATEST ROADWAY MOW STRIP STANDARD.
6. (POST 2 THROUGH POST 8) ARE MODIFIED STEEL-YIELDING POSTS WITH YIELDING HOLES AT GROUND LEVEL. THERE ARE NO SUBSTITUTE POSTS.
7. POSTS SHALL NOT BE SET IN CONCRETE.
8. IF SOLID ROCK IS ENCOUNTERED FOR ANY OF THE POSTS IN THE SYSTEM, CONTACT THE MANUFACTURER FOR SPECIFIC INSTALLATION GUIDANCE.
9. HARDWARE (BOLTS, NUTS, & WASHERS) SHALL BE GALVANIZED IN ACCORDANCE WITH ITEM 445,"GALVANIZING". FITTINGS SHALL BE SUBSIDIARY TO THE BID ITEM.
10. A COMPOSITE MATERIAL BLOCKOUT THAT MEETS DMS-7210 REQUIREMENTS MAY BE SUBSTITUTED FOR AN APPROVED WOOD BLOCKOUT. SEE CONSTRUCTION DIVISION MATERIAL PRODUCER LIST (MPL) FOR CERTIFIED PRODUCERS.
11. THE ENTIRE SYSTEM MUST BE INSTALLED IN A STRAIGHT LINE WITHOUT ANY CURVE. HOWEVER, THE SYSTEM CAN BE OFFSET BY TWO FEET AS SHOWN ON THE APPROACH GRADING DETAIL TO HELP OFF-SET THE IMPACT HEAD FROM SHOULDER OF THE ROAD.

ITEM	QTY	MAIN SYSTEM COMPONENTS	ITEM #
A	1	SGET IMPACT HEAD	SIH1A
B	1	MODIFIED GUARDRAIL PANEL 12'-6" 12GA	126SPZGP
B2	1	MODIFIED GUARDRAIL PANEL 9'-4 1/2" 12GA	GP94
C	2	STANDARD GUARDRAIL PANEL 12'-6" 12GA	GP126
D	1	STANDARD GUARDRAIL PANEL 25'-0" 12GA	GP25
E	7	MODIFIED YIELDING I-BEAM POST W6x8.5	YP6MOD
F	6	COMPOSITE BLOCKOUT 6" X 8" X 14"	CBO8
G	6	WOOD BLOCKOUT 6" X 8" X 14"	WBO8
H	1	STRUT 3" X 3" X 80" x 1/4" A36 ANGLE	STR80
I	1	FOUNDATION TUBE 6" X 8" X 72" x 3/16"	FNDT6
J	1	WOOD BREAKAWAY POST 5 1/2" x 7 1/2" x 50"	WBRK50
K	1	WOOD STRIKE BLOCK	WSBLK14
L	1	STRIKE PLATE 1/4" A36 BENT PLATE	SPLT8
M	1	REINFORCEMENT PLATE 12 GA. GR55	REPLT17
N	1	GUARDRAIL GRABBER 2 1/2" X 2 1/2" X 16 1/2"	GGR17
O	1	BEARING PLATE 8" X 8 5/8" X 5/8" A36	BPLT8
P	1	PIPE SLEEVE 4 1/4" X 2 3/8" O.D. (2 1/8" I.D.)	PSLV4
Q	1	BCT CABLE 3/4" X 81" LENGTH	CBL81
		SMALL HARDWARE	
a	1	5/8" X 12" GUARDRAIL BOLT 307A HDG	12GRBLT
b	7	5/8" X 10" GUARDRAIL BOLT 307A HDG	10GRBLT
c	33	5/8" X 1 1/4" GR SPLICE BOLTS 307A HDG	1GRBLT
d	3	5/8" FLAT WASHER F436 A325 HDG	58FW436
e	1	5/8" LOCK WASHER HDG	58LW
f	39	5/8" GUARDRAIL HEX NUT HDG	58HN563
g	2	1/2" X 2" STRUT BOLT A325 HDG	2BLT
h	6	1/2" X 1 1/4" PLATE BOLT A325 HDG	125BLT
i	16	1/2" FLAT WASHER F436 A325 HDG	12FWF436
j	8	1/2" LOCK WASHER HDG	12LW
k	8	1/2" HEX NUT A563 HDG	12HN563
l	4	3/8" X 3" HEX LAG SCREW GR5 HDG	38LS
m	4	3/8" FLAT WASHER F436 A325 HDG	38FW844
n	2	1" FLAT WASHER F436 A325 HDG	1FWF436
o	2	1" HEX NUT A563DH HDG	1HN563
p	1	18" TO 24" LONG ZIP TIE RATED 175-200LB	ZPT18
q	1	1 1/2" X 4" SCH-40 PVC PIPE	PSPCR4
r	1	RFID CHIP RATED MIL-STD-810F	RFID810F
s	1	IMPACT HEAD REFLECTIVE SHEETING	RS30M

ALTERNATIVE ITEMS * **
NOTE: SEE PLAN VIEW

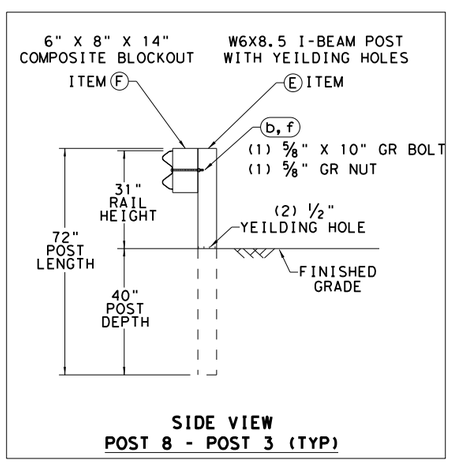

SIDE VIEW
POST 8 - POST 3 (TYP)

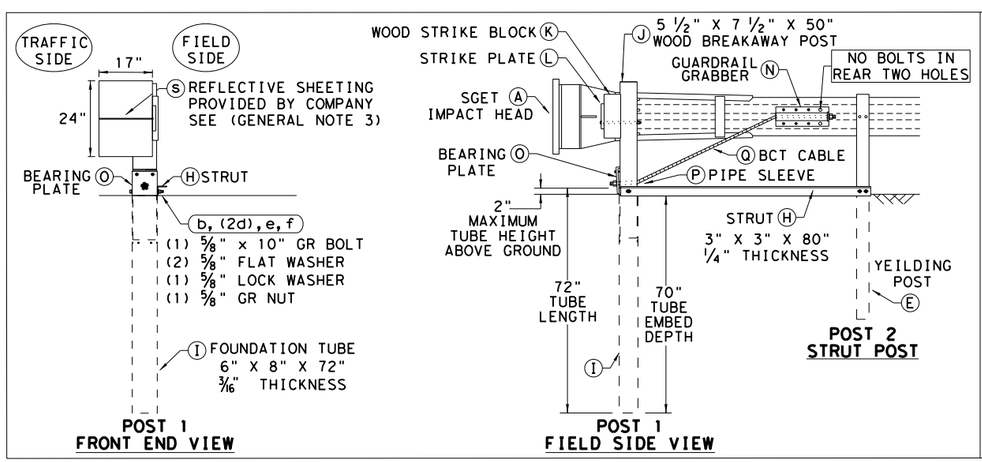

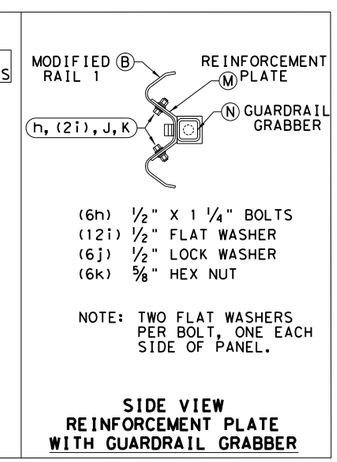

SIDE VIEW
REINFORCEMENT PLATE
WITH GUARDRAIL GRABBER

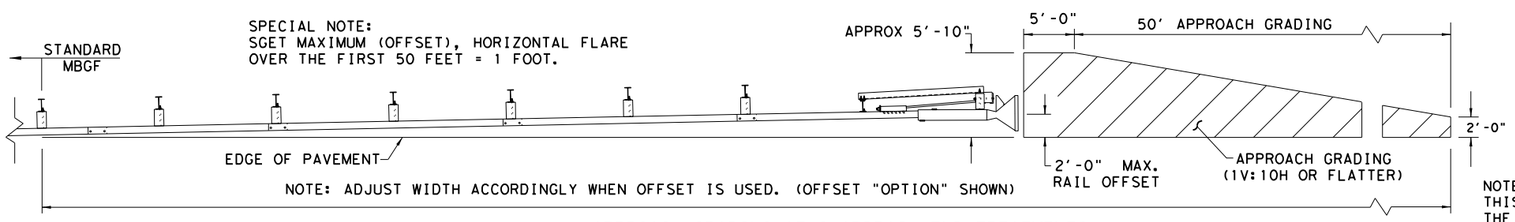

APPROACH GRADING AT GUARDRAIL END TREATMENTS

NOTE:
THIS STANDARD IS A BASIC REPRESENTATION OF THE SGET TERMINAL SYSTEM AND IS NOT INTENDED TO REPLACE THE MANUFACTURER'S ASSEMBLY MANUAL.

Texas Department of Transportation — Design Division Standard

SPIG INDUSTRY, LLC
SINGLE GUARDRAIL TERMINAL
SGET - TL-3 - MASH
SGT(15)31-20

FILE: sgt153120.dgn	DN: TxDOT	CK: KM	DW: VP	CK: VP
© TxDOT: APRIL 2020	CONT	SECT	JOB	HIGHWAY
REVISIONS	0231	03	156	IH-14
	DIST		COUNTY	SHEET NO.
	WACO		BELL	46

DATE: 7/11/2025
FILE: c:\txdot\pw_online\txdot3\patrick.jalufka\d0807894\sgt153120.dgn

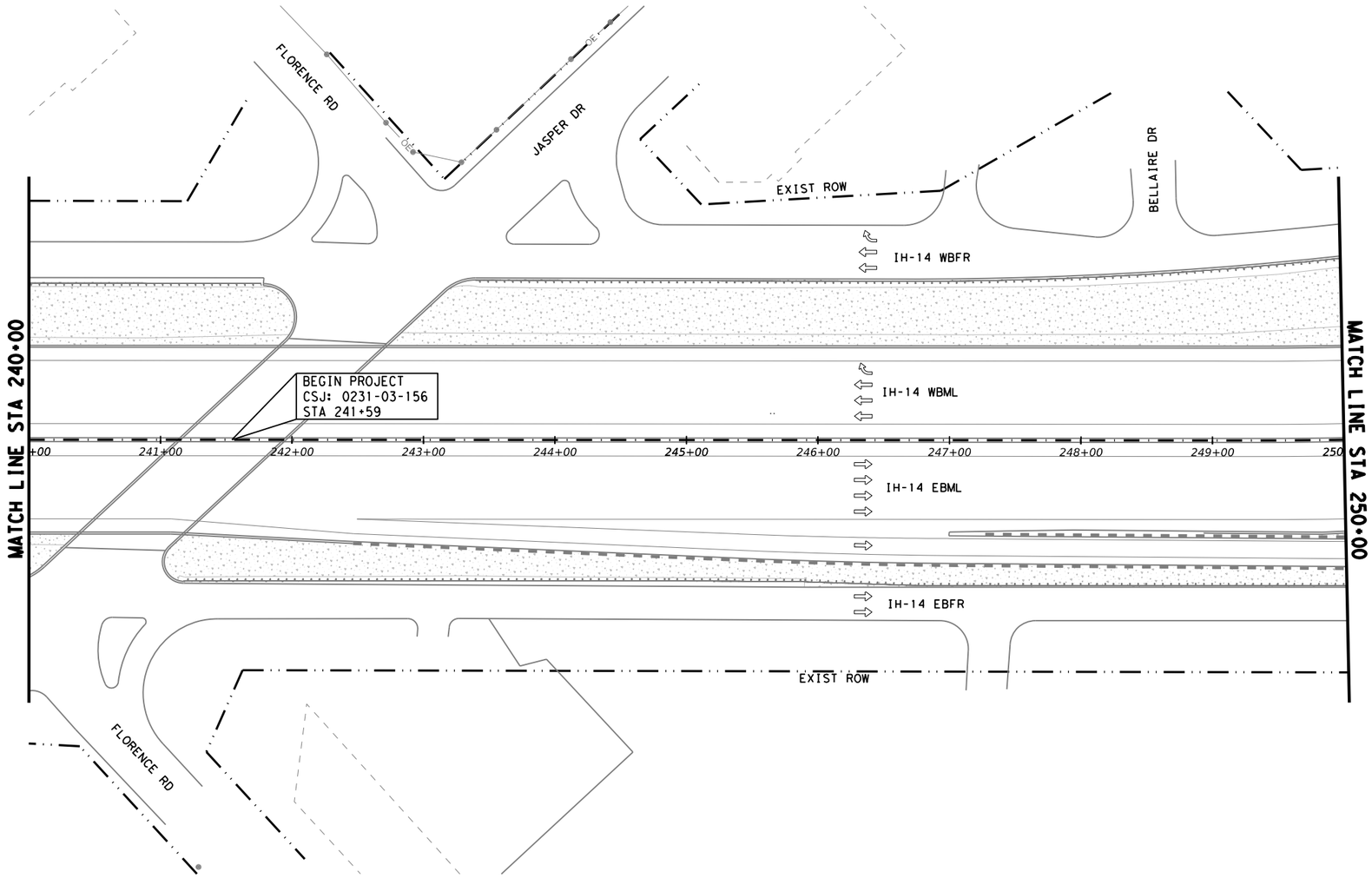

LEGEND

- EXIST TY A GROUND BOX TO BE REMOVED
- EXIST RDWY ILLUM ASSEM TO BE REMOVED (TRANS BASE)
- EXIST RDWY ILLUM ASSEM TO BE REMOVED (BRIDGE MOUNT)
- EXIST GROUND BOX (TY A)
- EXIST CONDUIT (TRENCHED)
- EXIST CONDUIT (BORED)
- EXIST RIGID METAL CONDUIT
- EXIST RDWY ILLUM ASSEM TO REMAIN (TRANS BASE)
- EXIST ELEC SERVICE

POLE DESIGNATION

RIP-S#-A#
- POLE #
- CIRCUIT #
- SERVICE #

CONDUIT DESIGNATION

ES#-##
- RUN #
- SERVICE #
- EXISTING CONDUIT

EXISTING CONDUIT AND CONDUCTOR RUNS					
RUN NAME	SERVICE	CIRCUITS	RUN LENGTH	690	0690
				7144	7150
				REMOVE ABOVE-GROUND CONDUIT	REMOVE CONDUCTOR
				LF	LF
NO REMOVALS THIS SHEET					

INTERIM REVIEW

THIS DOCUMENT IS RELEASED FOR THE PURPOSE OF INTERIM REVIEW UNDER THE AUTHORITY OF

PATRICK JALUFKA P.E., ON: 7/11/2025

IT IS NOT TO BE USED FOR CONSTRUCTION

PRELIMINARY NOT FOR CONSTRUCTION

© 2026 Texas Department of Transportation

REMOVAL LAYOUT

SCALE: 0 25 50 100 FEET
1" = 100' HORIZ.

SHEET 1 OF 20

CHANGE ORDER	FED. RD. DIV. NO.	CONT	SECT	JOB	HIGHWAY
	6	0231	03	156	IH-14
	STATE	DIST	COUNTY		SHEET NO.
	TEXAS	WACO	BELL		47

c:\txdot\pw*online\txdot3\patrick.jalufka\d0785500\Removal Layout (WAC).dgn 7/11/2025 4:36:03 PM
NODE

c:\txdot\pw*online\txdot3\patrick.jalufka\d0785500\Removal Layout (WAC).dgn 7/11/2025 4:36:05 PM
NODE

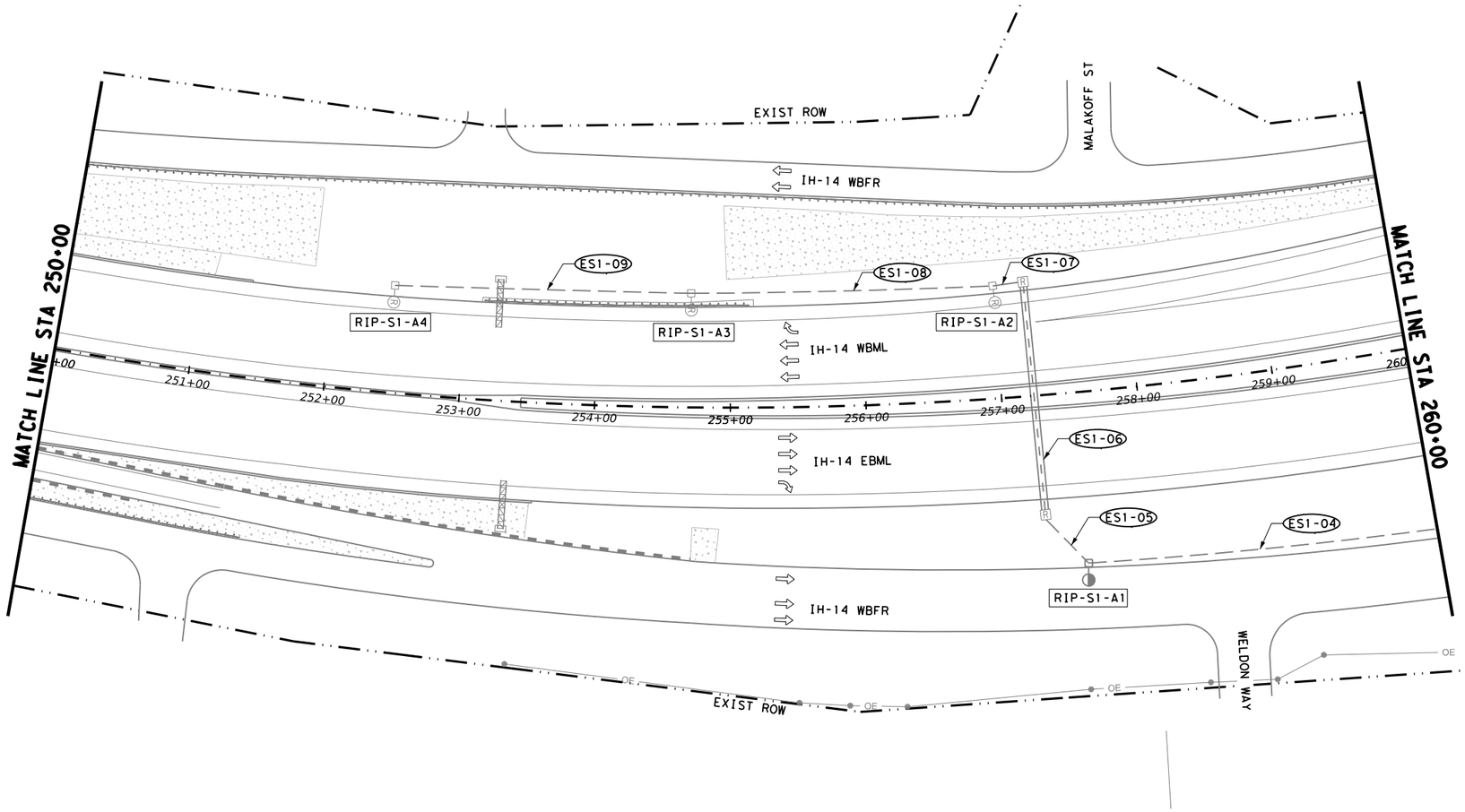

LEGEND

- EXIST TY A GROUND BOX TO BE REMOVED
- EXIST RDWY ILLUM ASSEM TO BE REMOVED (TRANS BASE)
- EXIST RDWY ILLUM ASSEM TO BE REMOVED (BRIDGE MOUNT)
- EXIST GROUND BOX (TY A)
- EXIST CONDUIT (TRENCHED)
- EXIST CONDUIT (BORED)
- EXIST RIGID METAL CONDUIT
- EXIST RDWY ILLUM ASSEM TO REMAIN (TRANS BASE)
- EXIST ELEC SERVICE

POLE DESIGNATION

RIP-S#-A#
- POLE #
- CIRCUIT #
- SERVICE #

CONDUIT DESIGNATION

ES#-##
- RUN #
- SERVICE #
- EXISTING CONDUIT

EXISTING CONDUIT AND CONDUCTOR RUNS					
RUN NAME	SERVICE	CIRCUITS	RUN LENGTH	690 7144 REMOVE ABOVE-GROUND CONDUIT LF	0690 7150 REMOVE CONDUCTOR LF
ES1-04	ES1	A	259	NO WORK	
ES1-05	ES1	A	48		144
ES1-06	ES1	A	172		516
ES1-07	ES1	A	22		66
ES1-08	ES1	A	220		660
ES1-09	ES1	A	220		660
			SHEET TOTAL:		2046

SUMMARY OF REMOVAL ITEMS			
BID CODE	DESCRIPTION	UNIT	QTY
610 7009	REMOVE RD IL ASM (TRANS-BASE)	EA	3
624 7013	REMOVE GROUND BOX	EA	2
690 7150	REMOVE CONDUCTOR	LF	2046

INTERIM REVIEW

THIS DOCUMENT IS RELEASED FOR THE PURPOSE OF INTERIM REVIEW UNDER THE AUTHORITY OF

PATRICK JALUFKA P.E., ON: 7/11/2025

IT IS NOT TO BE USED FOR CONSTRUCTION

PRELIMINARY NOT FOR CONSTRUCTION

© 2026 Texas Department of Transportation

REMOVAL LAYOUT

SCALE: 1" = 100' HORIZ. (0 25 50 100 FEET)

SHEET 2 OF 20

CHANGE ORDER	FED. RD. DIV. NO.	CONT	SECT	JOB	HIGHWAY
	6	0231	03	156	IH-14
	STATE	DIST	COUNTY		SHEET NO.
	TEXAS	WACO	BELL		48

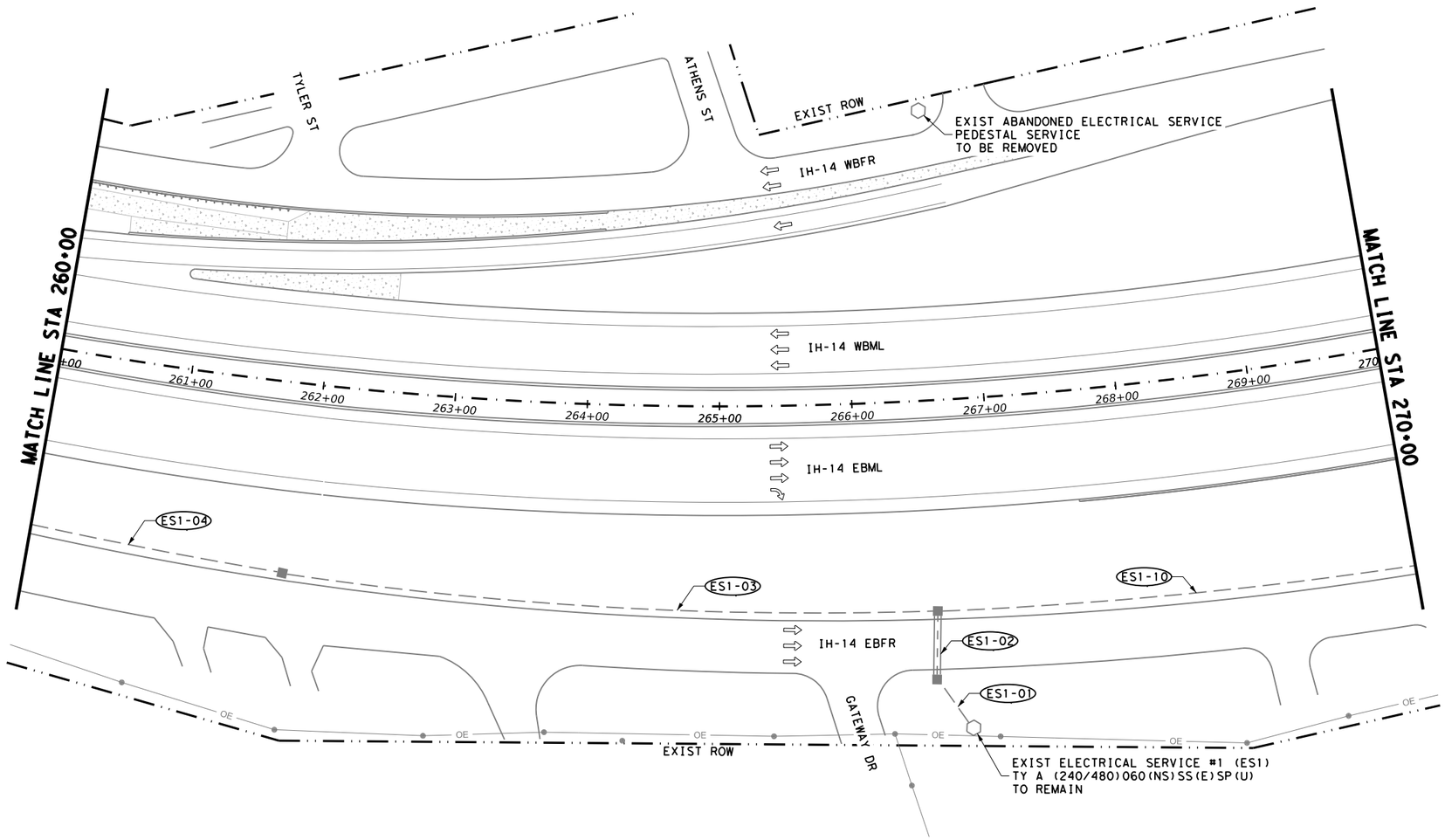

LEGEND

- EXIST TY A GROUND BOX TO BE REMOVED
- EXIST RDWY ILLUM ASSEM TO BE REMOVED (TRANS BASE)
- EXIST RDWY ILLUM ASSEM TO BE REMOVED (BRIDGE MOUNT)
- EXIST GROUND BOX (TY A)
- EXIST CONDUIT (TRENCHED)
- EXIST CONDUIT (BORED)
- EXIST RIGID METAL CONDUIT
- EXIST RDWY ILLUM ASSEM TO REMAIN (TRANS BASE)
- EXIST ELEC SERVICE

POLE DESIGNATION

RIP-S#-A#
- POLE #
- CIRCUIT #
- SERVICE #

CONDUIT DESIGNATION

ES#-##
- RUN #
- SERVICE #
- EXISTING CONDUIT

N

EXISTING CONDUIT AND CONDUCTOR RUNS					
				690	0690
				7144	7150
RUN NAME	SERVICE	CIRCUITS	RUN LENGTH	REMOVE ABOVE-GROUND CONDUIT	REMOVE CONDUCTOR
				LF	LF
ES1-01	ES1	ABC	46	NO WORK	
ES1-02	ES1	ABC	52	NO WORK	
ES1-03	ES1	A	498	NO WORK	
ES1-04	ES1	A	194	NO WORK	
ES1-10	ES1	BC	365	NO WORK	
SHEET TOTAL:					

SUMMARY OF REMOVAL ITEMS			
BID CODE	DESCRIPTION	UNIT	QTY
628 7002	REMOVE ELECTRICAL SERVICES	EA	1

INTERIM REVIEW

THIS DOCUMENT IS RELEASED FOR THE PURPOSE OF INTERIM REVIEW UNDER THE AUTHORITY OF

PATRICK JALUFKA P.E., ON: 7/11/2025

IT IS NOT TO BE USED FOR CONSTRUCTION

PRELIMINARY NOT FOR CONSTRUCTION

© 2026 Texas Department of Transportation

REMOVAL LAYOUT

SCALE: 0 25 50 100 FEET
1" = 100' HORIZ.

SHEET 3 OF 20

CHANGE ORDER	FED. RD. DIV. NO.	CONT	SECT	JOB	HIGHWAY
	6	0231	03	156	IH-14
	STATE	DIST	COUNTY		SHEET NO.
	TEXAS	WACO	BELL		49

c:\txdot\pw*online\txdot3\patrick.jalufka\d0785500\Removal Layout (WAC).dgn 7/11/2025 4:36:06 PM
NODE

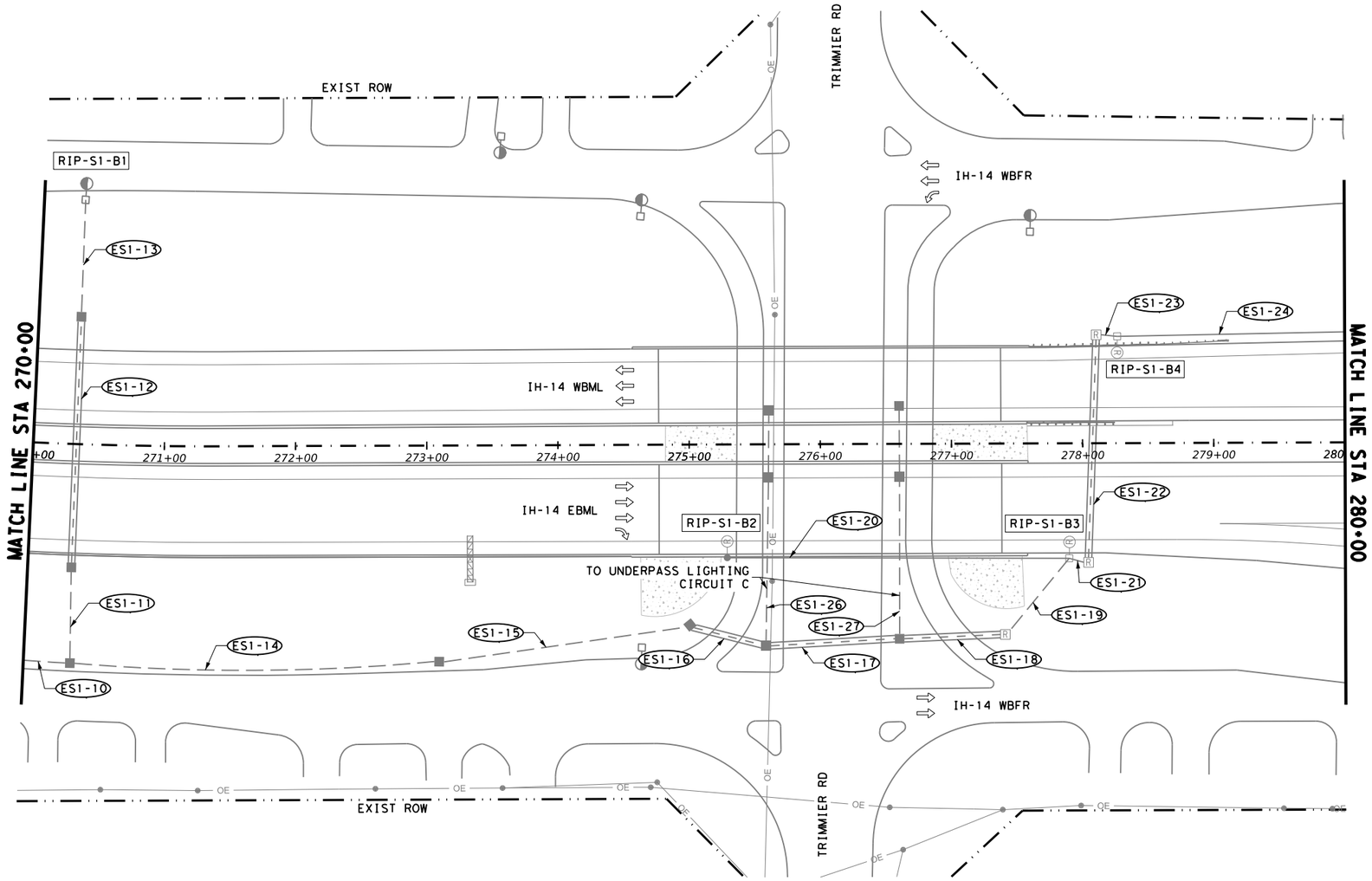

LEGEND

- EXIST TY A GROUND BOX TO BE REMOVED
- EXIST RDWY ILLUM ASSEM TO BE REMOVED (TRANS BASE)
- EXIST RDWY ILLUM ASSEM TO BE REMOVED (BRIDGE MOUNT)
- EXIST GROUND BOX (TY A)
- EXIST CONDUIT (TRENCHED)
- EXIST CONDUIT (BORED)
- EXIST RIGID METAL CONDUIT
- EXIST RDWY ILLUM ASSEM TO REMAIN (TRANS BASE)
- EXIST ELEC SERVICE

POLE DESIGNATION

RIP-S#-A#
- POLE #
- CIRCUIT #
- SERVICE #

CONDUIT DESIGNATION

ES#-##
- RUN #
- SERVICE #
- EXISTING CONDUIT

EXISTING CONDUIT AND CONDUCTOR RUNS					
RUN NAME	SERVICE	CIRCUITS	RUN LENGTH	690 7144 REMOVE ABOVE-GROUND CONDUIT LF	0690 7150 REMOVE CONDUCTOR LF
ES1-10	ES1	BC	36	NO WORK	
ES1-11	ES1	B	73	NO WORK	
ES1-12	ES1	B	191	NO WORK	
ES1-13	ES1	B	89	NO WORK	
ES1-14	ES1	BC	282		1410
ES1-15	ES1	BC	193		965
ES1-16	ES1	BC	60		300
ES1-17	ES1	BC	102		510
ES1-18	ES1	B	81		243
ES1-19	ES1	B	76		228
ES1-20	ES1	B	261	261	783
ES1-21	ES1	B	15		45
ES1-22	ES1	B	174		522
ES1-23	ES1	B	16		48
ES1-24	ES1	B	173		519
ES1-26	ES1	C	128	NO WORK	
ES1-27	ES1	C	123	NO WORK	
			SHEET TOTAL:	261	5573

SUMMARY OF REMOVAL ITEMS			
BID CODE	DESCRIPTION	UNIT	QTY
610 7006	REMOVE RD IL ASM (BRIDGE MOUNT)	EA	1
610 7009	REMOVE RD IL ASM (TRANS-BASE)	EA	2
624 7013	REMOVE GROUND BOX	EA	3
690 7144	REMOVE ABOVE-GROUND CONDUIT	LF	261
690 7150	REMOVE CONDUCTOR	LF	5573

INTERIM REVIEW

THIS DOCUMENT IS RELEASED FOR THE PURPOSE OF INTERIM REVIEW UNDER THE AUTHORITY OF

PATRICK JALUFKA P.E., ON: 7/8/2025

IT IS NOT TO BE USED FOR CONSTRUCTION

PRELIMINARY NOT FOR CONSTRUCTION

© 2026 Texas Department of Transportation

REMOVAL LAYOUT

SCALE: 1" = 100' HORIZ. (0 25 50 100 FEET)

SHEET 4 OF 20

CHANGE ORDER	FED. RD. DIV. NO.	CONT	SECT	JOB	HIGHWAY
	6	0231	03	156	IH-14
	STATE	DIST	COUNTY		SHEET NO.
	TEXAS	WACO	BELL		50

c:\txdot\pw*online\txdot3\patrick.jalufka\d0785500\Removal Layout (WAC).dgn 7/11/2025 4:36:08 PM NODE

c:\txdot\pw*online*\txdot3\patrick.jalufka\d0785500\Removal Layout (WAC).dgn 7/11/2025 4:36:09 PM

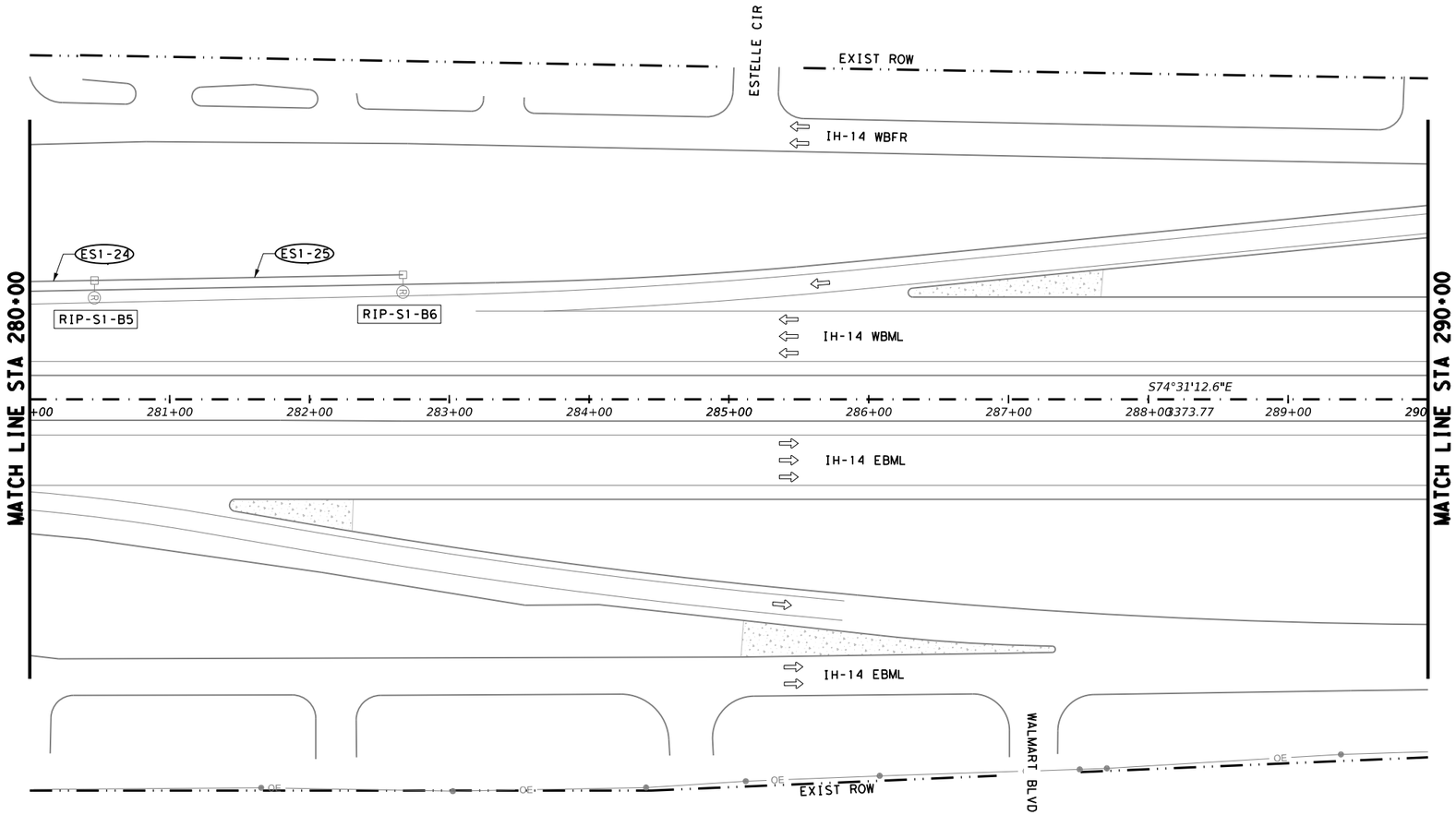

LEGEND

- EXIST TY A GROUND BOX TO BE REMOVED
- EXIST RDWY ILLUM ASSEM TO BE REMOVED (TRANS BASE)
- EXIST RDWY ILLUM ASSEM TO BE REMOVED (BRIDGE MOUNT)
- EXIST GROUND BOX (TY A)
- EXIST CONDUIT (TRENCHED)
- EXIST CONDUIT (BORED)
- EXIST RIGID METAL CONDUIT
- EXIST RDWY ILLUM ASSEM TO REMAIN (TRANS BASE)
- EXIST ELEC SERVICE

POLE DESIGNATION

RIP-S#-A#
- POLE #
- CIRCUIT #
- SERVICE #

CONDUIT DESIGNATION

ES#-##
- RUN #
- SERVICE #
- EXISTING CONDUIT

EXISTING CONDUIT AND CONDUCTOR RUNS					
RUN NAME	SERVICE	CIRCUITS	RUN LENGTH	690 7144 REMOVE ABOVE-GROUND CONDUIT LF	0690 7150 REMOVE CONDUCTOR LF
ES1-24	ES1	B	46		138
ES1-25	ES1	B	220		660
			SHEET TOTAL:		798

SUMMARY OF REMOVAL ITEMS			
BID CODE	DESCRIPTION	UNIT	QTY
610 7009	REMOVE RD IL ASM (TRANS-BASE)	EA	2
690 7150	REMOVE CONDUCTOR	LF	798

INTERIM REVIEW

THIS DOCUMENT IS RELEASED FOR THE PURPOSE OF INTERIM REVIEW UNDER THE AUTHORITY OF

PATRICK JALUFKA P.E., ON: 7/11/2025

IT IS NOT TO BE USED FOR CONSTRUCTION

PRELIMINARY NOT FOR CONSTRUCTION

© 2026 Texas Department of Transportation

REMOVAL LAYOUT

SCALE: 1" = 100' HORIZ. (0 25 50 100 FEET)

SHEET 5 OF 20

CHANGE ORDER	FED. RD. DIV. NO.	CONT	SECT	JOB	HIGHWAY
	6	0231	03	156	IH-14
	STATE	DIST	COUNTY		SHEET NO.
	TEXAS	WACO	BELL		51

NODE

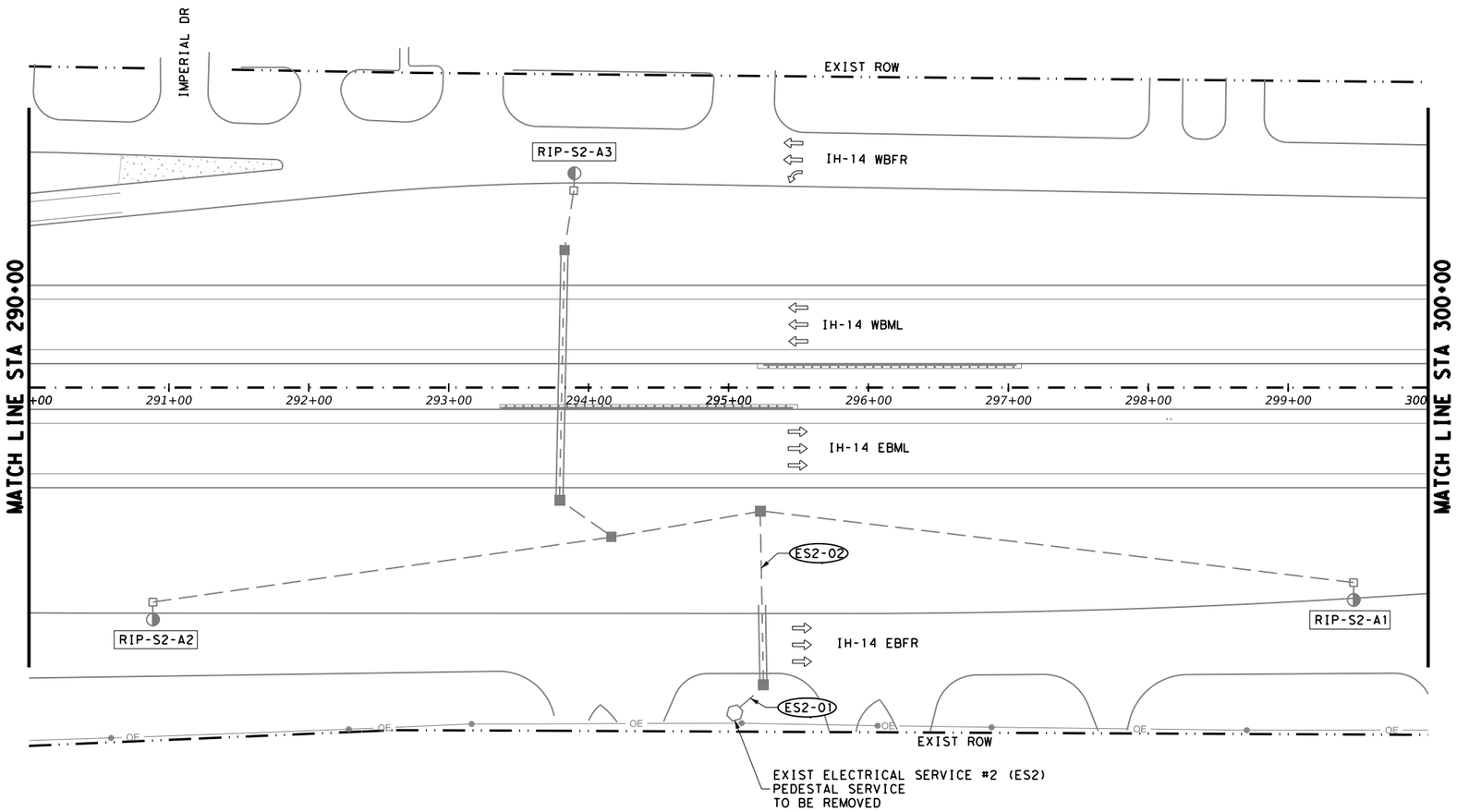

LEGEND

- EXIST TY A GROUND BOX TO BE REMOVED
- EXIST RDWY ILLUM ASSEM TO BE REMOVED (TRANS BASE)
- EXIST RDWY ILLUM ASSEM TO BE REMOVED (BRIDGE MOUNT)
- EXIST GROUND BOX (TY A)
- EXIST CONDUIT (TRENCHED)
- EXIST CONDUIT (BORED)
- EXIST RIGID METAL CONDUIT
- EXIST RDWY ILLUM ASSEM TO REMAIN (TRANS BASE)
- EXIST ELEC SERVICE

POLE DESIGNATION

RIP-S#-A#
- POLE #
- CIRCUIT #
- SERVICE #

CONDUIT DESIGNATION

ES#-##
- RUN #
- SERVICE #
- EXISTING CONDUIT

EXISTING CONDUIT AND CONDUCTOR RUNS					
RUN NAME	SERVICE	CIRCUITS	RUN LENGTH	690 7144 REMOVE ABOVE-GROUND CONDUIT LF	0690 7150 REMOVE CONDUCTOR LF
ES2-01	ES2	A	29		87
ES2-02	ES2	A	124	NO WORK	
			SHEET TOTAL:		87

SUMMARY OF REMOVAL ITEMS			
BID CODE	DESCRIPTION	UNIT	QTY
628 7002	REMOVE ELECTRICAL SERVICES	EA	1
690 7150	REMOVE CONDUCTOR	LF	87

INTERIM REVIEW

THIS DOCUMENT IS RELEASED FOR THE PURPOSE OF INTERIM REVIEW UNDER THE AUTHORITY OF

PATRICK JALUFKA P.E., ON: 7/11/2025

IT IS NOT TO BE USED FOR CONSTRUCTION

PRELIMINARY NOT FOR CONSTRUCTION

© 2026 Texas Department of Transportation

REMOVAL LAYOUT

SCALE: 1" = 100' HORIZ. (0 25 50 100 FEET)

SHEET 6 OF 20

CHANGE ORDER	FED. RD. DIV. NO.	CONT	SECT	JOB	HIGHWAY
	6	0231	03	156	IH-14
	STATE	DIST	COUNTY		SHEET NO.
	TEXAS	WACO	BELL		52

c:\txdot\pwonline\txdot3\patrick.jalufka\d0785500\Removal Layout (WAC).dgn 7/11/2025 4:36:10 PM
NODE

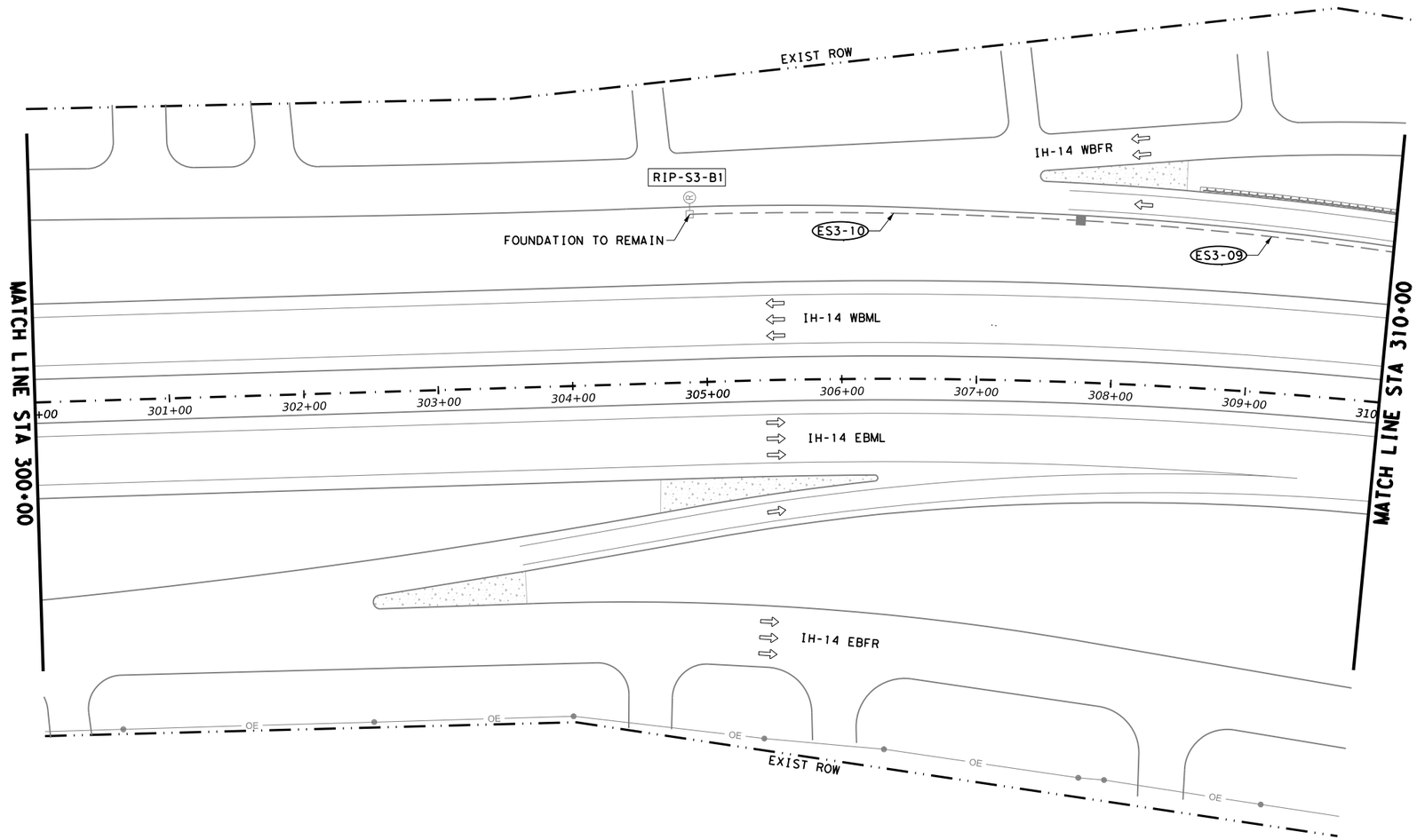

LEGEND

- EXIST TY A GROUND BOX TO BE REMOVED
- EXIST RDWY ILLUM ASSEM TO BE REMOVED (TRANS BASE)
- EXIST RDWY ILLUM ASSEM TO BE REMOVED (BRIDGE MOUNT)
- EXIST GROUND BOX (TY A)
- EXIST CONDUIT (TRENCHED)
- EXIST CONDUIT (BORED)
- EXIST RIGID METAL CONDUIT
- EXIST RDWY ILLUM ASSEM TO REMAIN (TRANS BASE)
- EXIST ELEC SERVICE

POLE DESIGNATION

RIP-S#-A#
- POLE #
- CIRCUIT #
- SERVICE #

CONDUIT DESIGNATION

ES#-##
- RUN #
- SERVICE #
- EXISTING CONDUIT

N

EXISTING CONDUIT AND CONDUCTOR RUNS					
RUN NAME	SERVICE	CIRCUITS	RUN LENGTH	690 7144 REMOVE ABOVE-GROUND CONDUIT LF	0690 7150 REMOVE CONDUCTOR LF
ES3-09	ES3	B	234		702
ES3-10	ES3	B	291		873
			SHEET TOTAL:		1575

SUMMARY OF REMOVAL ITEMS			
BID CODE	DESCRIPTION	UNIT	QTY
610 7009	REMOVE RD IL ASM (TRANS-BASE)	EA	1
690 7150	REMOVE CONDUCTOR	LF	1575

INTERIM REVIEW

THIS DOCUMENT IS RELEASED FOR THE PURPOSE OF INTERIM REVIEW UNDER THE AUTHORITY OF

PATRICK JALUFKA P.E., ON: 7/11/2025

IT IS NOT TO BE USED FOR CONSTRUCTION

PRELIMINARY NOT FOR CONSTRUCTION

© 2026 Texas Department of Transportation

REMOVAL LAYOUT

SCALE: 0 25 50 100 FEET
1" = 100' HORIZ.

SHEET 7 OF 20

CHANGE ORDER	FED. RD. DIV. NO.	CONT	SECT	JOB	HIGHWAY
	6	0231	03	156	IH-14
	STATE	DIST	COUNTY		SHEET NO.
	TEXAS	WACO	BELL		53

c:\txdot\pw*online\txdot3\patrick.jalufka\d0785500\Removal Layout (WAC).dgn 7/11/2025 4:36:11 PM
NODE

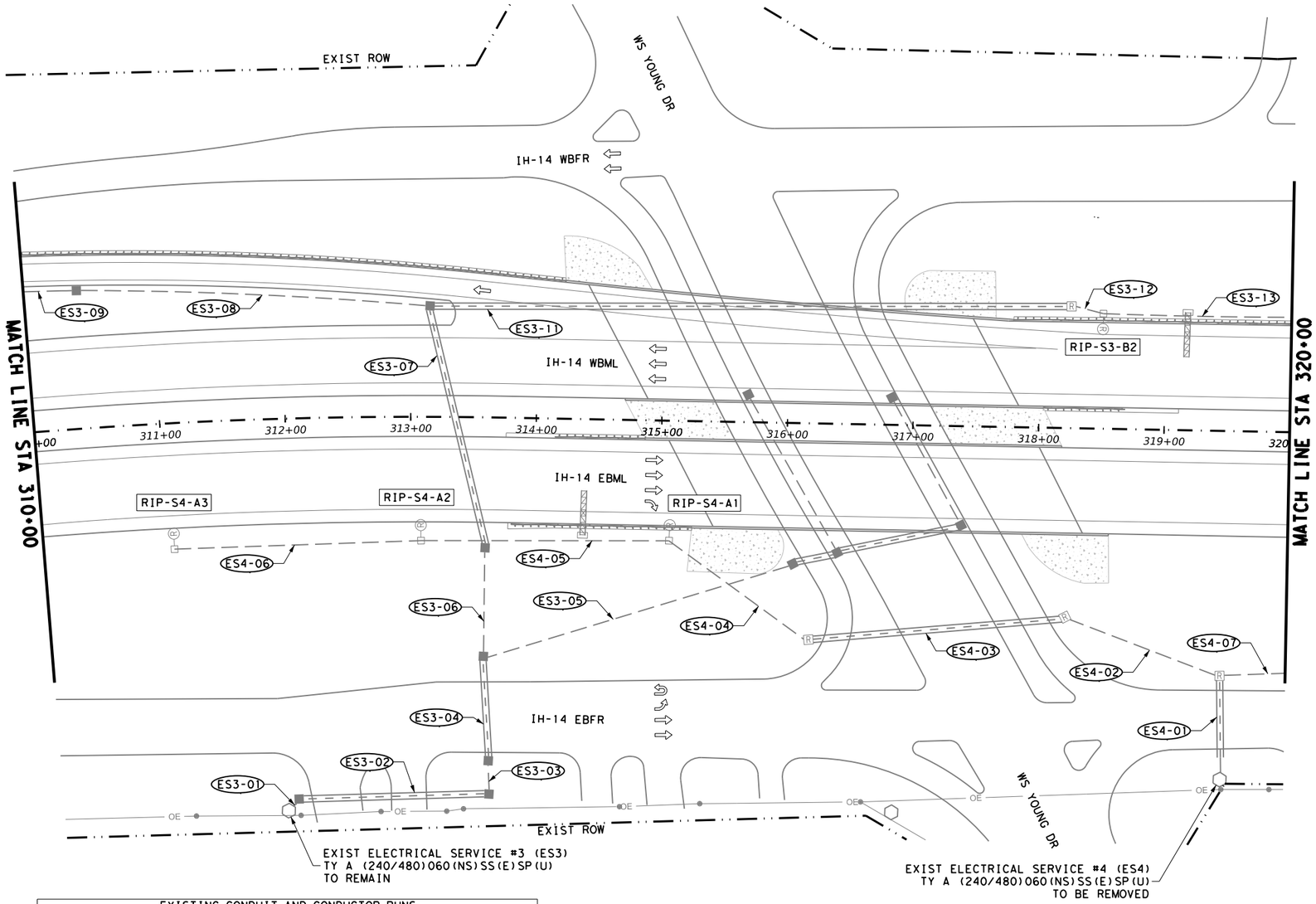

LEGEND

- EXIST TY A GROUND BOX TO BE REMOVED
- EXIST RDWY ILLUM ASSEM TO BE REMOVED (TRANS BASE)
- EXIST RDWY ILLUM ASSEM TO BE REMOVED (BRIDGE MOUNT)
- EXIST GROUND BOX (TY A)
- EXIST CONDUIT (TRENCHED)
- EXIST CONDUIT (BORED)
- EXIST RIGID METAL CONDUIT
- EXIST RDWY ILLUM ASSEM TO REMAIN (TRANS BASE)
- EXIST ELEC SERVICE

POLE DESIGNATION

RIP-S#-A#
- POLE #
- CIRCUIT #
- SERVICE #

CONDUIT DESIGNATION

ES#-##
- RUN #
- SERVICE #
- EXISTING CONDUIT

EXISTING CONDUIT AND CONDUCTOR RUNS

RUN NAME	SERVICE	CIRCUITS	RUN LENGTH	690 / 7144 REMOVE ABOVE-GROUND CONDUIT LF	0690 / 7150 REMOVE CONDUCTOR LF
ES3-01	ES3	AB	12		60
ES3-02	ES3	AB	151		755
ES3-03	ES3	AB	26		130
ES3-04	ES3	AB	83		415
ES3-05	ES3	A	257		771
ES3-06	ES3	B	86		258
ES3-07	ES3	B	197		591
ES3-08	ES3	B	282		846
ES3-09	ES3	B	42		126
ES3-11	ES3	B	511		1533
ES3-12	ES3	B	26		78
ES3-13	ES3	B	150		450
ES4-01	ES4	A	83		249
ES4-02	ES4	A	132		396
ES4-03	ES4	A	205		615
ES4-04	ES4	A	136		408
ES4-05	ES4	A	197		591
ES4-06	ES4	A	196		588
ES4-07	ES4	A	52		156
			SHEET TOTAL:		9016

SUMMARY OF REMOVAL ITEMS

BID CODE	DESCRIPTION	UNIT	QTY
610 7009	REMOVE RD IL ASM (TRANS-BASE)	EA	4
624 7013	REMOVE GROUND BOX	EA	4
628 7002	REMOVE ELECTRICAL SERVICES	EA	1
690 7150	REMOVE CONDUCTOR	LF	9016

INTERIM REVIEW

THIS DOCUMENT IS RELEASED FOR THE PURPOSE OF INTERIM REVIEW UNDER THE AUTHORITY OF

PATRICK JALUFKA P.E., ON: 7/11/2025

IT IS NOT TO BE USED FOR CONSTRUCTION

PRELIMINARY NOT FOR CONSTRUCTION

© 2026 Texas Department of Transportation

REMOVAL LAYOUT

SCALE: 1" = 100' HORIZ. (0 25 50 100 FEET)

SHEET 8 OF 20

CHANGE ORDER	FED. RD. DIV. NO.	CONT	SECT	JOB	HIGHWAY
	6	0231	03	156	IH-14
	STATE	DIST	COUNTY		SHEET NO.
	TEXAS	WACO	BELL		54

c:\txdot\pw*online\txdot3\patrick.jalufka\d0785500\Removal Layout (WAC).dgn 7/11/2025 4:36:11 PM NODE

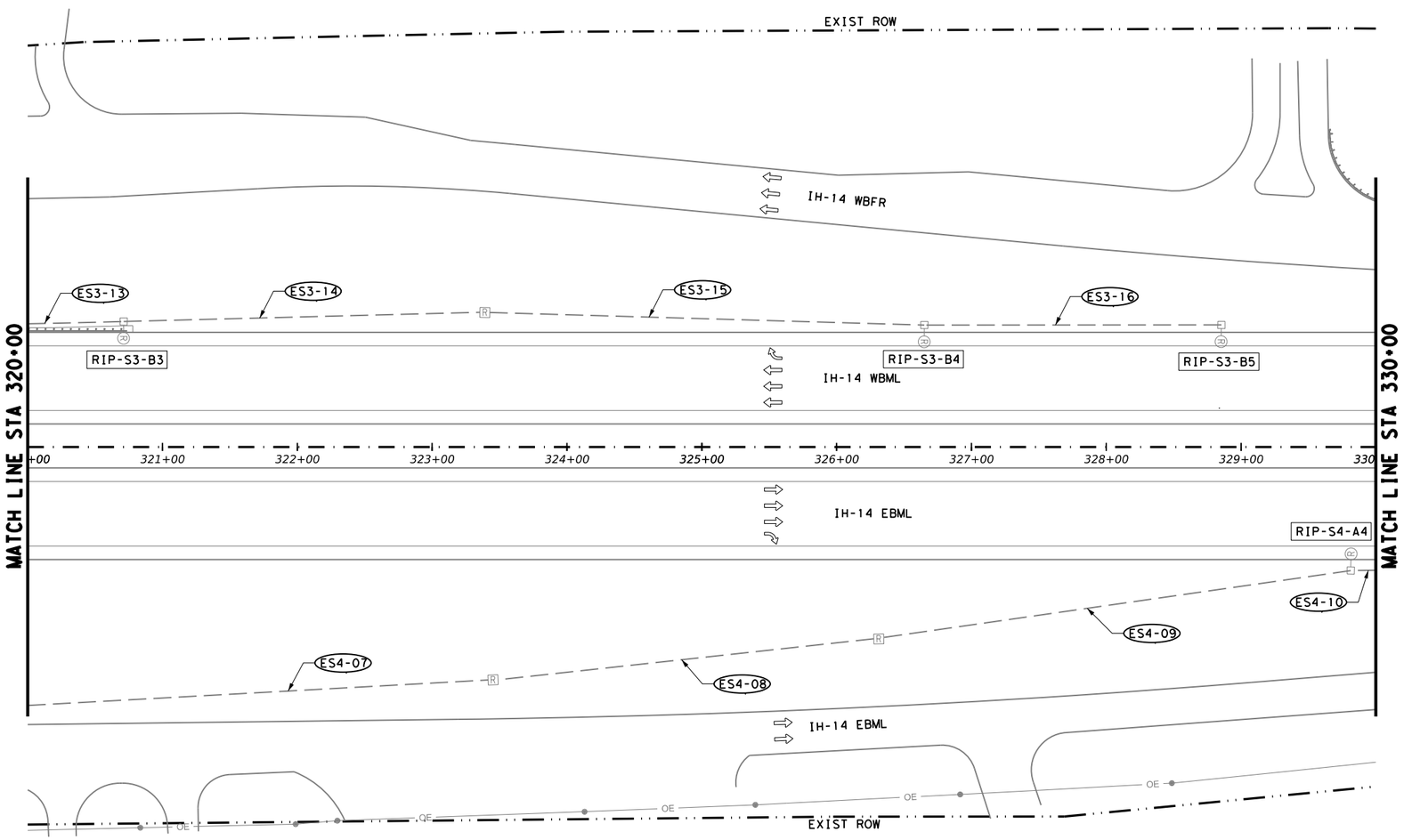

LEGEND

- EXIST TY A GROUND BOX TO BE REMOVED
- EXIST RDWY ILLUM ASSEM TO BE REMOVED (TRANS BASE)
- EXIST RDWY ILLUM ASSEM TO BE REMOVED (BRIDGE MOUNT)
- EXIST GROUND BOX (TY A)
- EXIST CONDUIT (TRENCHED)
- EXIST CONDUIT (BORED)
- EXIST RIGID METAL CONDUIT
- EXIST RDWY ILLUM ASSEM TO REMAIN (TRANS BASE)
- EXIST ELEC SERVICE

POLE DESIGNATION

RIP-S#-A#
- POLE #
- CIRCUIT #
- SERVICE #

CONDUIT DESIGNATION

ES#-##
- RUN #
- SERVICE #
- EXISTING CONDUIT

EXISTING CONDUIT AND CONDUCTOR RUNS					
				690	0690
				7144	7150
RUN NAME	SERVICE	CIRCUITS	RUN LENGTH	REMOVE ABOVE-GROUND CONDUIT	REMOVE CONDUCTOR
				LF	LF
ES3-13	ES3	B	71		213
ES3-14	ES3	B	268		804
ES3-15	ES3	B	326		978
ES3-16	ES3	B	220		660
ES4-07	ES4	A	346		1038
ES4-08	ES4	A	288		864
ES4-09	ES4	A	354		1062
ES4-10	ES4	A	19		57
			SHEET TOTAL:		5676

SUMMARY OF REMOVAL ITEMS			
BID CODE	DESCRIPTION	UNIT	QTY
610 7009	REMOVE RD IL ASM (TRANS-BASE)	EA	4
624 7013	REMOVE GROUND BOX	EA	3
690 7150	REMOVE CONDUCTOR	LF	5676

INTERIM REVIEW

THIS DOCUMENT IS RELEASED FOR THE PURPOSE OF INTERIM REVIEW UNDER THE AUTHORITY OF

PATRICK JALUFKA P.E., ON: 7/11/2025

IT IS NOT TO BE USED FOR CONSTRUCTION

PRELIMINARY NOT FOR CONSTRUCTION

© 2026 Texas Department of Transportation

REMOVAL LAYOUT

SCALE: 1" = 100' HORIZ. (0 25 50 100 FEET)

SHEET 9 OF 20

CHANGE ORDER	FED. RD. DIV. NO.	CONT	SECT	JOB	HIGHWAY
	6	0231	03	156	IH-14
	STATE	DIST	COUNTY		SHEET NO.
	TEXAS	WACO	BELL		55

c:\txdot\pw*online\txdot3\patrick.jalufka\d0785500\Removal Layout (WAC).dgn 7/11/2025 4:36:13 PM NODE

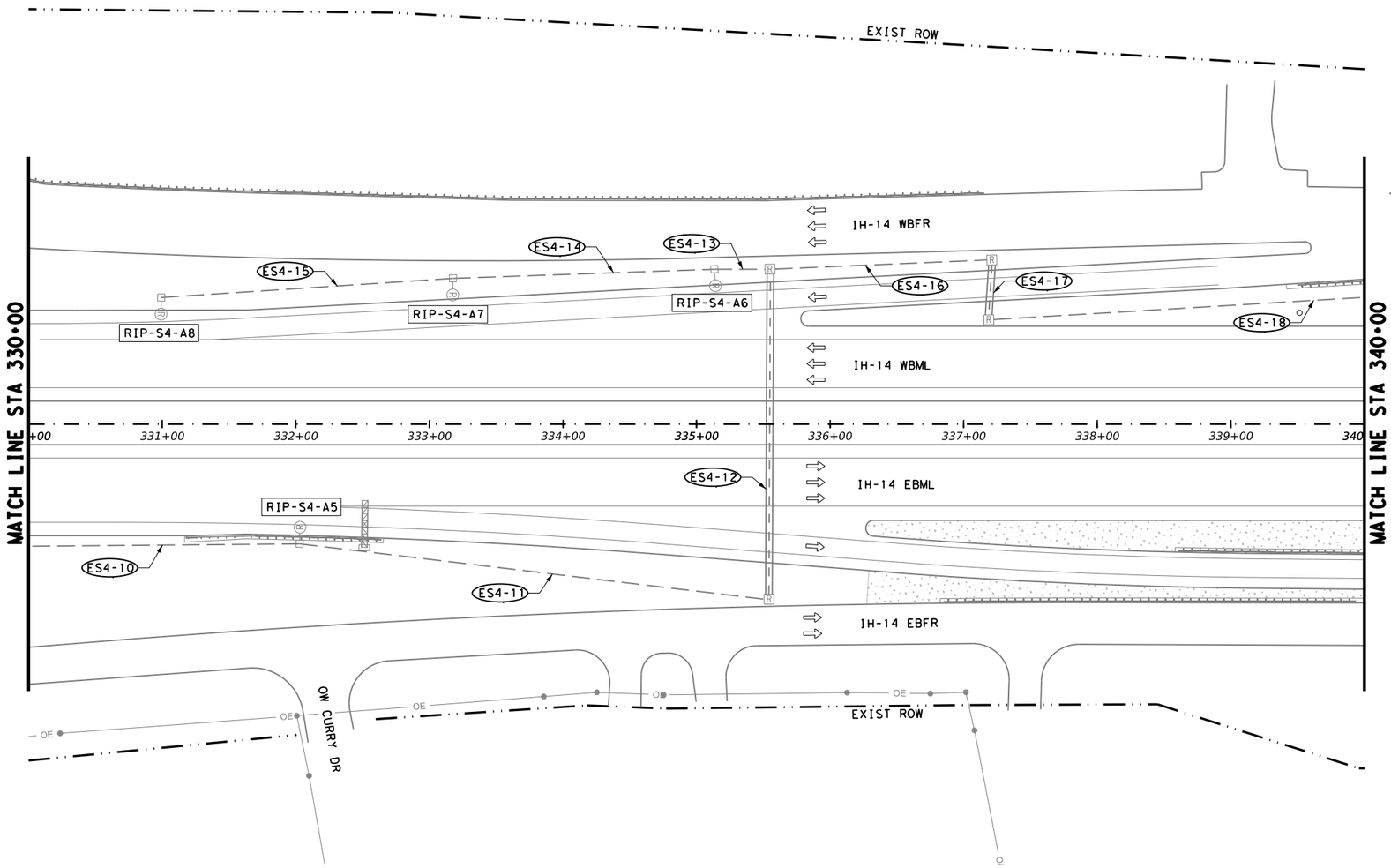

LEGEND

- EXIST TY A GROUND BOX TO BE REMOVED
- EXIST RDWY ILLUM ASSEM TO BE REMOVED (TRANS BASE)
- EXIST RDWY ILLUM ASSEM TO BE REMOVED (BRIDGE MOUNT)
- EXIST GROUND BOX (TY A)
- EXIST CONDUIT (TRENCHED)
- EXIST CONDUIT (BORED)
- EXIST RIGID METAL CONDUIT
- EXIST RDWY ILLUM ASSEM TO REMAIN (TRANS BASE)
- EXIST ELEC SERVICE

POLE DESIGNATION

RIP-S#-A#
- POLE #
- CIRCUIT #
- SERVICE #

CONDUIT DESIGNATION

ES#-##
- RUN #
- SERVICE #
- EXISTING CONDUIT

EXISTING CONDUIT AND CONDUCTOR RUNS

RUN NAME	SERVICE	CIRCUITS	RUN LENGTH	690 / 7144 REMOVE ABOVE-GROUND CONDUIT LF	0690 / 7150 REMOVE CONDUCTOR LF
ES4-10	ES4	A	203		609
ES4-11	ES4	A	354		1062
ES4-12	ES4	A	247		741
ES4-13	ES4	A	42		126
ES4-14	ES4	A	196		588
ES4-15	ES4	A	219		657
ES4-16	ES4	A	166		498
ES4-17	ES4	A	45		135
ES4-18	ES4	A	282		846
			SHEET TOTAL:		5262

SUMMARY OF REMOVAL ITEMS

BID CODE	DESCRIPTION	UNIT	QTY
610 7009	REMOVE RD IL ASM (TRANS-BASE)	EA	4
624 7013	REMOVE GROUND BOX	EA	4
690 7150	REMOVE CONDUCTOR	LF	5262

INTERIM REVIEW

THIS DOCUMENT IS RELEASED FOR THE PURPOSE OF INTERIM REVIEW UNDER THE AUTHORITY OF

PATRICK JALUFKA P.E., ON: 7/11/2025

IT IS NOT TO BE USED FOR CONSTRUCTION

PRELIMINARY NOT FOR CONSTRUCTION

© 2026 Texas Department of Transportation

REMOVAL LAYOUT

SCALE: 0 25 50 100 FEET
1" = 100' HORIZ.

SHEET 10 OF 20

CHANGE ORDER	FED. RD. DIV. NO.	CONT	SECT	JOB	HIGHWAY
	6	0231	03	156	IH-14
	STATE	DIST	COUNTY		SHEET NO.
	TEXAS	WACO	BELL		56

c:\txdot\pwonline\txdot3\patrick.jalufka\d0785500\Removal Layout (WAC).dgn 7/11/2025 4:36:14 PM
NODE

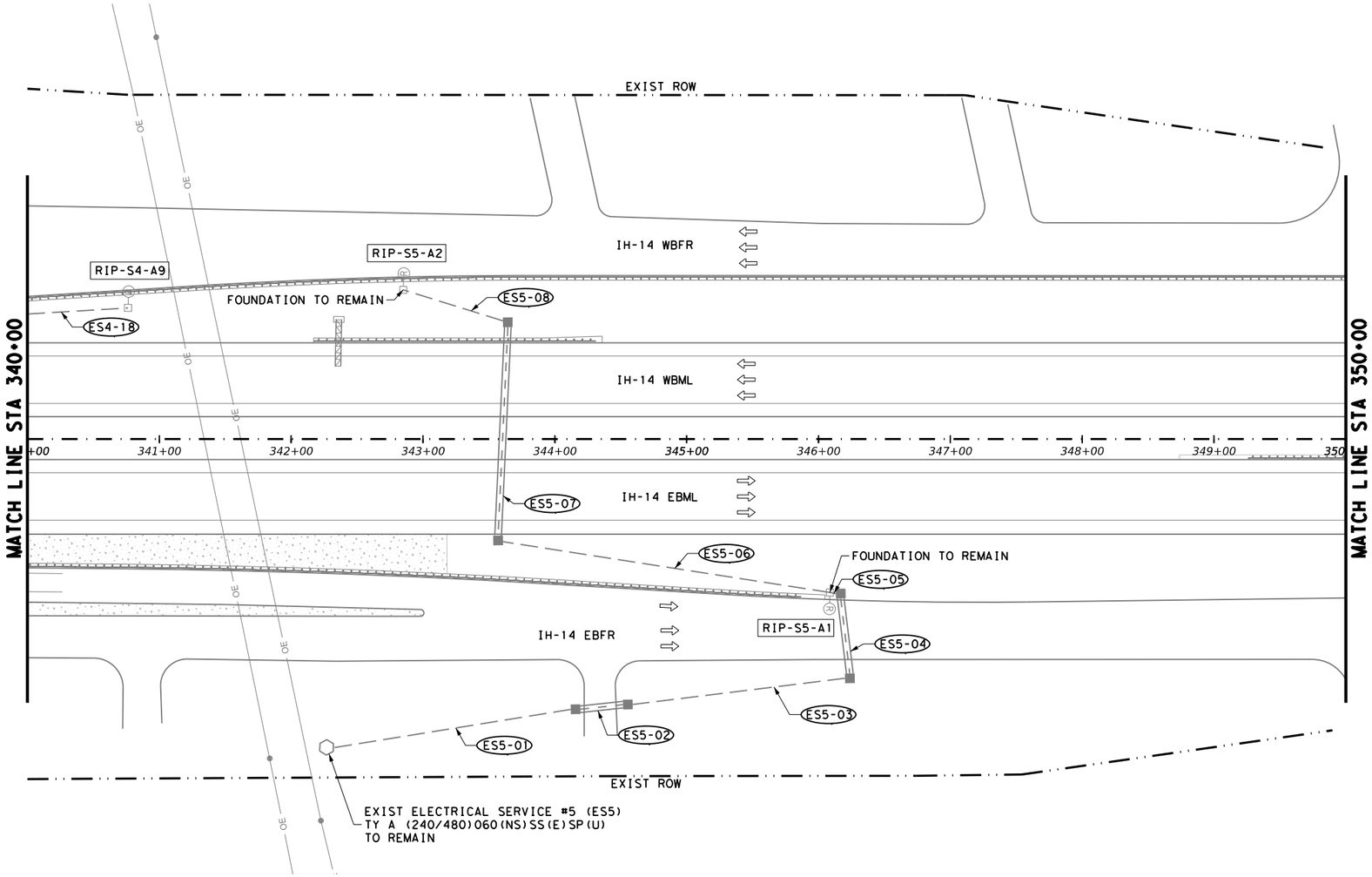

LEGEND

- EXIST TY A GROUND BOX TO BE REMOVED
- EXIST RDWY ILLUM ASSEM TO BE REMOVED (TRANS BASE)
- EXIST RDWY ILLUM ASSEM TO BE REMOVED (BRIDGE MOUNT)
- EXIST GROUND BOX (TY A)
- EXIST CONDUIT (TRENCHED)
- EXIST CONDUIT (BORED)
- EXIST RIGID METAL CONDUIT
- EXIST RDWY ILLUM ASSEM TO REMAIN (TRANS BASE)
- EXIST ELEC SERVICE

POLE DESIGNATION

RIP-S#-A#
- POLE #
- CIRCUIT #
- SERVICE #

CONDUIT DESIGNATION

ES#-##
- RUN #
- SERVICE #
- EXISTING CONDUIT

EXISTING CONDUIT AND CONDUCTOR RUNS

RUN NAME	SERVICE	CIRCUITS	RUN LENGTH	690 7144 REMOVE ABOVE-GROUND CONDUIT LF	0690 7150 REMOVE CONDUCTOR LF
ES4-18	ES4	A	76		228
ES5-01	ES5	A	191		573
ES5-02	ES5	A	40		120
ES5-03	ES5	A	170		510
ES5-04	ES5	A	65		195
ES5-05	ES5	A	8		24
ES5-06	ES5	A	255		765
ES5-07	ES5	A	166		498
ES5-08	ES5	A	83		249
SHEET TOTAL:					3162

SUMMARY OF REMOVAL ITEMS

BID CODE	DESCRIPTION	UNIT	QTY
610 7009	REMOVE RD IL ASM (TRANS-BASE)	EA	3
690 7150	REMOVE CONDUCTOR	LF	3162

INTERIM REVIEW

THIS DOCUMENT IS RELEASED FOR THE PURPOSE OF INTERIM REVIEW UNDER THE AUTHORITY OF

PATRICK JALUFKA P.E., ON: 7/11/2025

IT IS NOT TO BE USED FOR CONSTRUCTION

PRELIMINARY NOT FOR CONSTRUCTION

© 2026 Texas Department of Transportation

REMOVAL LAYOUT

SCALE: 1" = 100' HORIZ. (0 25 50 100 FEET)

SHEET 11 OF 20

CHANGE ORDER	FED. RD. DIV. NO.	CONT	SECT	JOB	HIGHWAY
	6	0231	03	156	IH-14
	STATE	DIST	COUNTY		SHEET NO.
	TEXAS	WACO	BELL		57

c:\txdot\pwonline\txdot3\patrick.jalufka\d0785500\Removal Layout (WAC).dgn 7/11/2025 4:36:15 PM
NODE

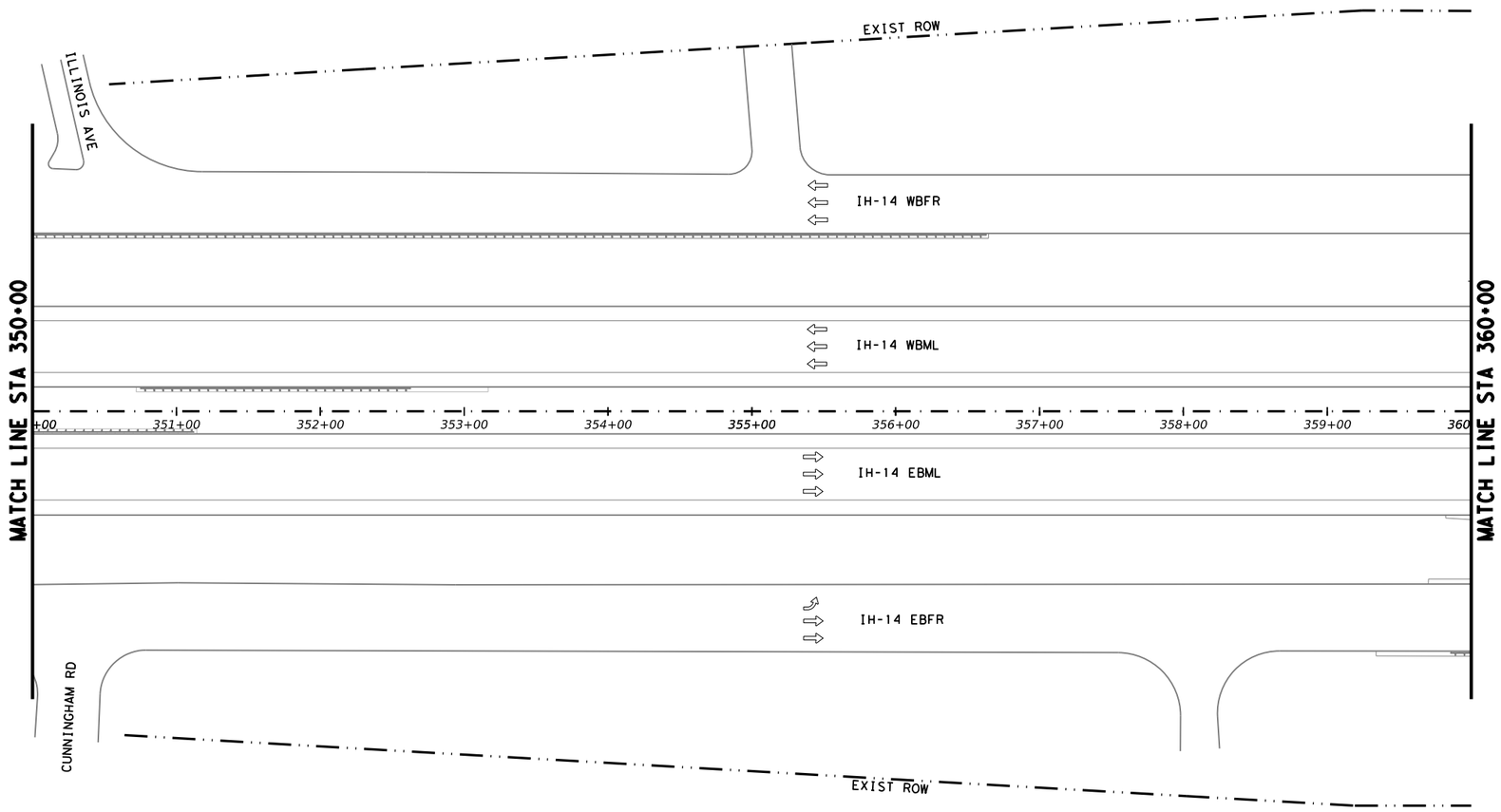

LEGEND

- EXIST TY A GROUND BOX TO BE REMOVED
- EXIST RDWY ILLUM ASSEM TO BE REMOVED (TRANS BASE)
- EXIST RDWY ILLUM ASSEM TO BE REMOVED (BRIDGE MOUNT)
- EXIST GROUND BOX (TY A)
- EXIST CONDUIT (TRENCHED)
- EXIST CONDUIT (BORED)
- EXIST RIGID METAL CONDUIT
- EXIST RDWY ILLUM ASSEM TO REMAIN (TRANS BASE)
- EXIST ELEC SERVICE

POLE DESIGNATION

RIP-S#-A#
- POLE #
- CIRCUIT #
- SERVICE #

CONDUIT DESIGNATION

ES#-##
- RUN #
- SERVICE #
- EXISTING CONDUIT

EXISTING CONDUIT AND CONDUCTOR RUNS					
RUN NAME	SERVICE	CIRCUITS	RUN LENGTH	690	0690
				7144	7150
				REMOVE ABOVE-GROUND CONDUIT	REMOVE CONDUCTOR
				LF	LF
NO REMOVALS THIS SHEET					

INTERIM REVIEW

THIS DOCUMENT IS RELEASED FOR THE PURPOSE OF INTERIM REVIEW UNDER THE AUTHORITY OF

PATRICK JALUFKA P.E., ON: 7/11/2025

IT IS NOT TO BE USED FOR CONSTRUCTION

PRELIMINARY NOT FOR CONSTRUCTION

© 2026 Texas Department of Transportation

REMOVAL LAYOUT

SCALE: 1" = 100' HORIZ. (0 25 50 100 FEET)

SHEET 12 OF 20

CHANGE ORDER	FED. RD. DIV. NO.	CONT	SECT	JOB	HIGHWAY
	6	0231	03	156	IH-14
	STATE	DIST	COUNTY		SHEET NO.
	TEXAS	WACO	BELL		58

c:\txdot\pw*online\txdot3\patrick.jalufka\d0785500\Removal Layout (WAC).dgn 7/11/2025 4:36:17 PM NODE

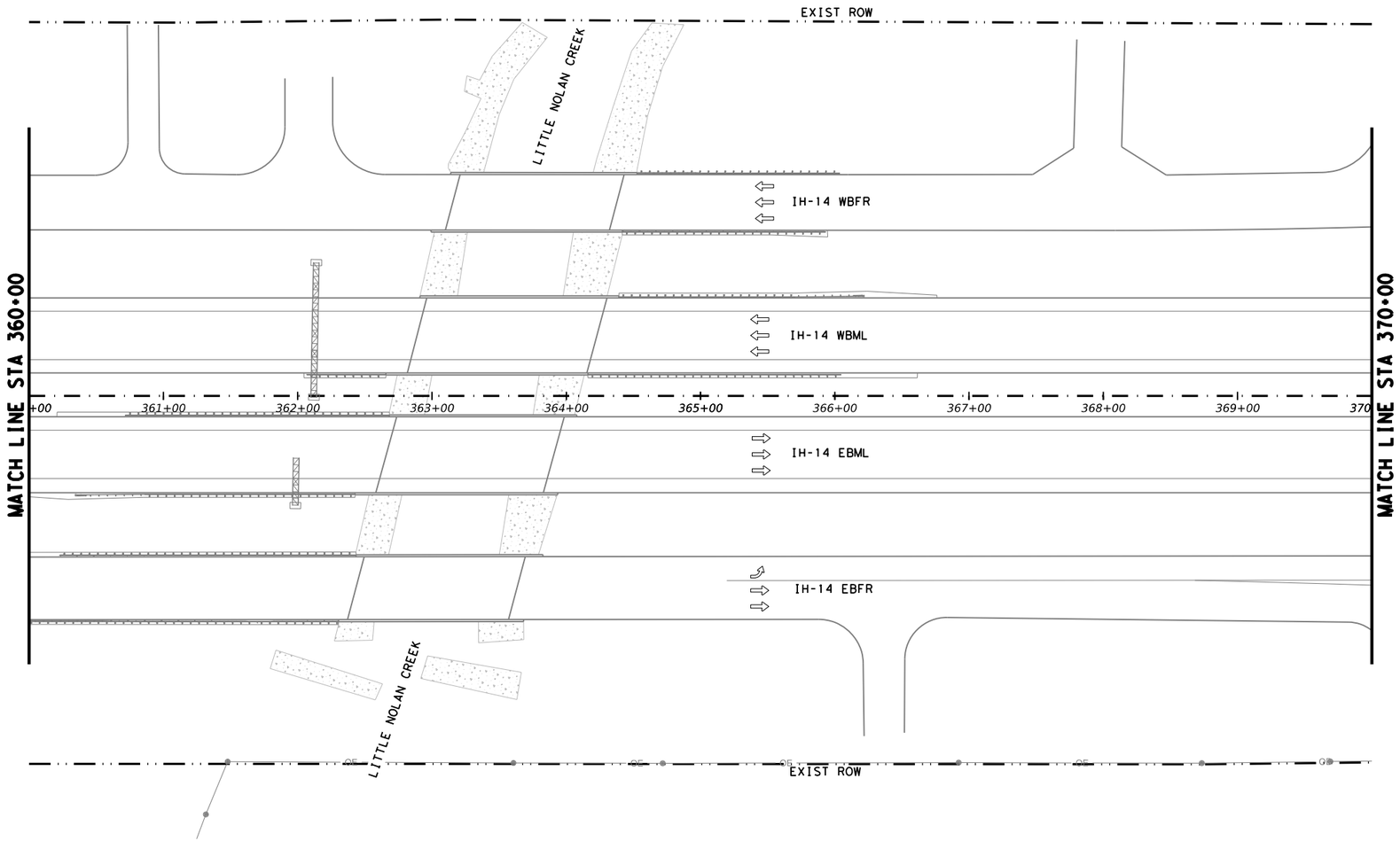

LEGEND

- EXIST TY A GROUND BOX TO BE REMOVED
- EXIST RDWY ILLUM ASSEM TO BE REMOVED (TRANS BASE)
- EXIST RDWY ILLUM ASSEM TO BE REMOVED (BRIDGE MOUNT)
- EXIST GROUND BOX (TY A)
- EXIST CONDUIT (TRENCHED)
- EXIST CONDUIT (BORED)
- EXIST RIGID METAL CONDUIT
- EXIST RDWY ILLUM ASSEM TO REMAIN (TRANS BASE)
- EXIST ELEC SERVICE

POLE DESIGNATION

RIP-S#-A#
- POLE #
- CIRCUIT #
- SERVICE #

CONDUIT DESIGNATION

ES#-##
- RUN #
- SERVICE #
- EXISTING CONDUIT

EXISTING CONDUIT AND CONDUCTOR RUNS					
RUN NAME	SERVICE	CIRCUITS	RUN LENGTH	690	0690
				7144	7150
				REMOVE ABOVE-GROUND CONDUIT	REMOVE CONDUCTOR
				LF	LF
NO REMOVALS THIS SHEET					

INTERIM REVIEW

THIS DOCUMENT IS RELEASED FOR THE PURPOSE OF INTERIM REVIEW UNDER THE AUTHORITY OF

PATRICK JALUFKA P.E., ON: 7/8/2025

IT IS NOT TO BE USED FOR CONSTRUCTION

PRELIMINARY NOT FOR CONSTRUCTION

© 2026 Texas Department of Transportation

REMOVAL LAYOUT

SCALE: 0 25 50 100 FEET
1" = 100' HORIZ.

SHEET 13 OF 20

CHANGE ORDER	FED. RD. DIV. NO.	CONT	SECT	JOB	HIGHWAY
	6	0231	03	156	IH-14
	STATE	DIST	COUNTY		SHEET NO.
	TEXAS	WACO	BELL		59

c:\txdot\pwonline\txdot3\patrick.jalufka\d0785500\Removal Layout (WAC).dgn 7/11/2025 4:36:19 PM
NODE

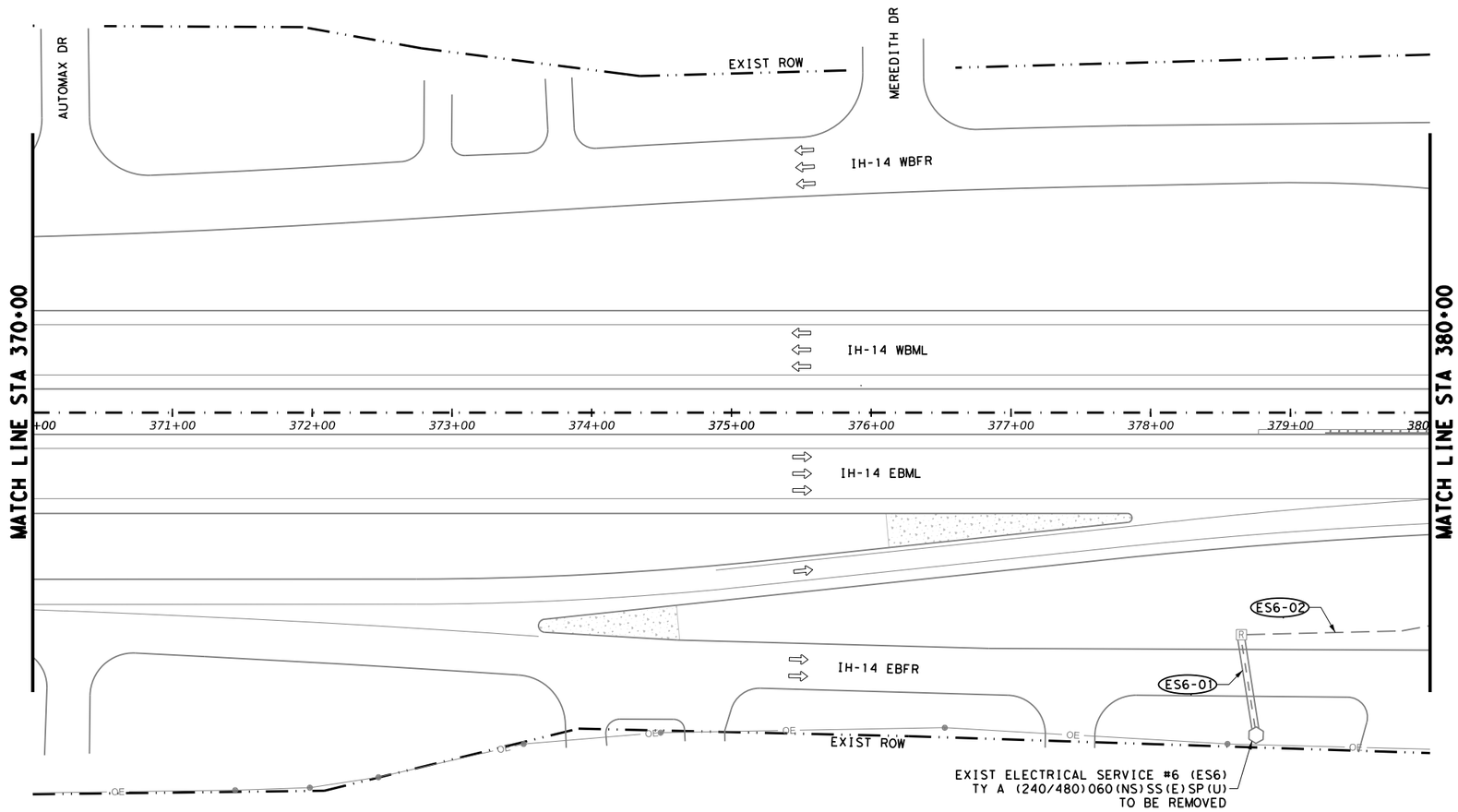

LEGEND

- EXIST TY A GROUND BOX TO BE REMOVED
- EXIST RDWY ILLUM ASSEM TO BE REMOVED (TRANS BASE)
- EXIST RDWY ILLUM ASSEM TO BE REMOVED (BRIDGE MOUNT)
- EXIST GROUND BOX (TY A)
- EXIST CONDUIT (TRENCHED)
- EXIST CONDUIT (BORED)
- EXIST RIGID METAL CONDUIT
- EXIST RDWY ILLUM ASSEM TO REMAIN (TRANS BASE)
- EXIST ELEC SERVICE

POLE DESIGNATION

RIP-S#-A#
- POLE #
- CIRCUIT #
- SERVICE #

CONDUIT DESIGNATION

ES#-##
- RUN #
- SERVICE #
- EXISTING CONDUIT

EXISTING CONDUIT AND CONDUCTOR RUNS					
RUN NAME	SERVICE	CIRCUITS	RUN LENGTH	690 7144 REMOVE ABOVE-GROUND CONDUIT LF	0690 7150 REMOVE CONDUCTOR LF
ES6-01	ES6	A	73		219
ES6-02	ES6	A	135		405
			SHEET TOTAL:		624

SUMMARY OF REMOVAL ITEMS			
BID CODE	DESCRIPTION	UNIT	QTY
610 7006	REMOVE RD IL ASM (BRIDGE MOUNT)	EA	
610 7009	REMOVE RD IL ASM (TRANS-BASE)	EA	
624 7013	REMOVE GROUND BOX	EA	1
628 7002	REMOVE ELECTRICAL SERVICES	EA	1
690 7144	REMOVE ABOVE-GROUND CONDUIT	LF	0
690 7147	REMOVE UNDERGROUND CONDUIT	LF	0
690 7150	REMOVE CONDUCTOR	LF	624

INTERIM REVIEW

THIS DOCUMENT IS RELEASED FOR THE PURPOSE OF INTERIM REVIEW UNDER THE AUTHORITY OF

PATRICK JALUFKA P.E., ON: 7/11/2025

IT IS NOT TO BE USED FOR CONSTRUCTION

PRELIMINARY NOT FOR CONSTRUCTION

© 2026 Texas Department of Transportation

REMOVAL LAYOUT

SCALE: 1" = 100' HORIZ. (0 25 50 100 FEET)

SHEET 14 OF 20

CHANGE ORDER	FED. RD. DIV. NO.	CONT	SECT	JOB	HIGHWAY
	6	0231	03	156	IH-14
	STATE	DIST	COUNTY		SHEET NO.
	TEXAS	WACO	BELL		60

c:\txdot\pw*online*xdot3\patrick.jalufka\d0785500\Removal Layout (WAC).dgn 7/11/2025 4:36:20 PM
NODE

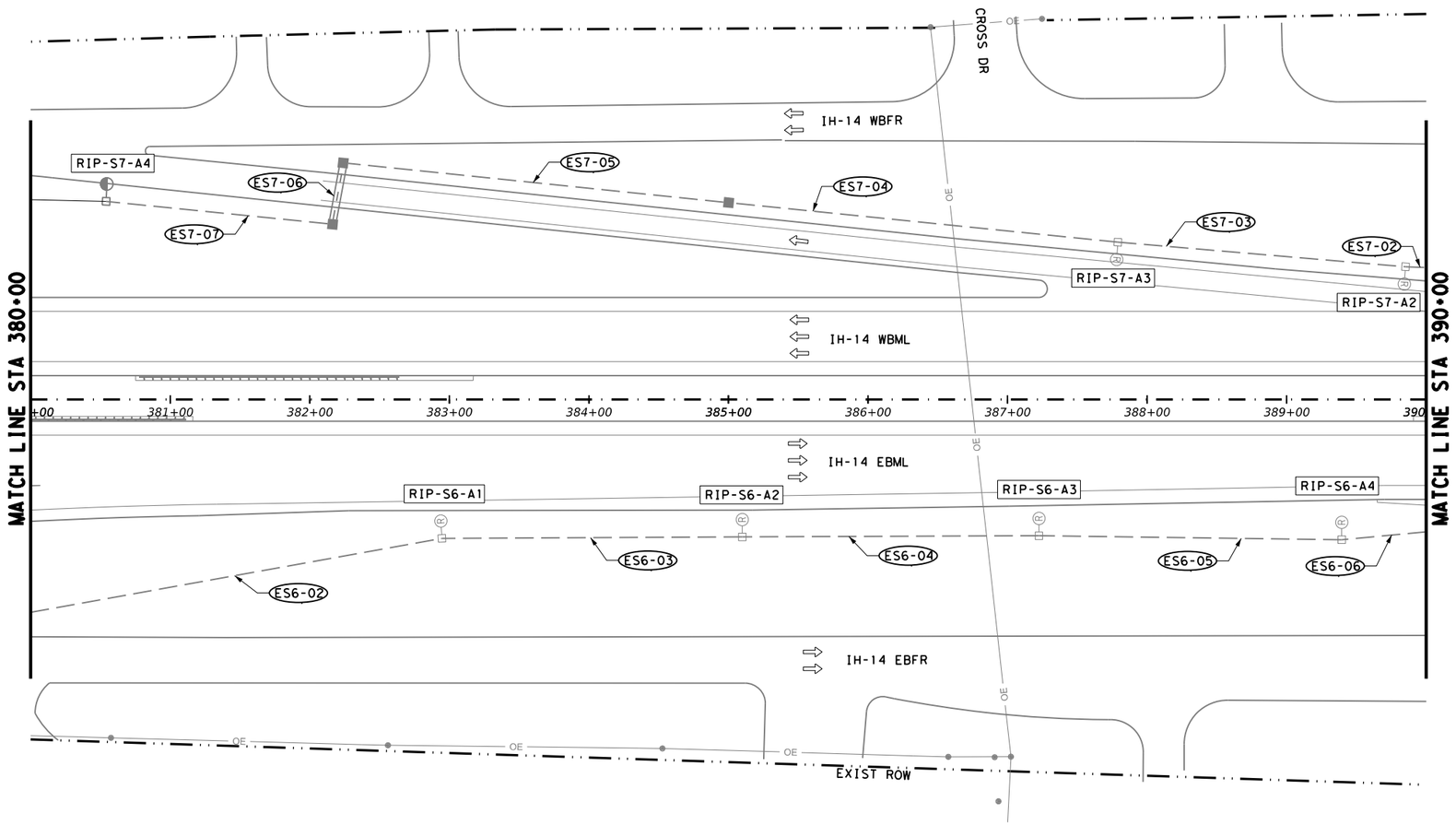

LEGEND

- EXIST TY A GROUND BOX TO BE REMOVED
- EXIST RDWY ILLUM ASSEM TO BE REMOVED (TRANS BASE)
- EXIST RDWY ILLUM ASSEM TO BE REMOVED (BRIDGE MOUNT)
- EXIST GROUND BOX (TY A)
- EXIST CONDUIT (TRENCHED)
- EXIST CONDUIT (BORED)
- EXIST RIGID METAL CONDUIT
- EXIST RDWY ILLUM ASSEM TO REMAIN (TRANS BASE)
- EXIST ELEC SERVICE

POLE DESIGNATION

RIP-S#-A#
- POLE #
- CIRCUIT #
- SERVICE #

CONDUIT DESIGNATION

ES#-##
- RUN #
- SERVICE #
- EXISTING CONDUIT

EXISTING CONDUIT AND CONDUCTOR RUNS					
RUN NAME	SERVICE	CIRCUITS	RUN LENGTH	690 / 7144 REMOVE ABOVE-GROUND CONDUIT LF	0690 / 7150 REMOVE CONDUCTOR LF
ES6-02	ES6	A	300		900
ES6-03	ES6	A	215		645
ES6-04	ES6	A	213		639
ES6-05	ES6	A	217		651
ES6-06	ES6	A	61		183
ES7-02	ES7	A	15		45
ES7-03	ES7	A	207		621
ES7-04	ES7	A	280		840
ES7-05	ES7	A	278	NO WORK	
ES7-06	ES7	A	45	NO WORK	
ES7-07	ES7	A	163	NO WORK	
			SHEET TOTAL:		4524

SUMMARY OF REMOVAL ITEMS			
BID CODE	DESCRIPTION	UNIT	QTY
610 7009	REMOVE RD IL ASM (TRANS-BASE)	EA	6
690 7150	REMOVE CONDUCTOR	LF	4524

INTERIM REVIEW

THIS DOCUMENT IS RELEASED FOR THE PURPOSE OF INTERIM REVIEW UNDER THE AUTHORITY OF

PATRICK JALUFKA P.E., ON: 7/11/2025

IT IS NOT TO BE USED FOR CONSTRUCTION

PRELIMINARY NOT FOR CONSTRUCTION

© 2026 Texas Department of Transportation

REMOVAL LAYOUT

SCALE: 0 25 50 100 FEET
1" = 100' HORIZ.

SHEET 15 OF 20

CHANGE ORDER	FED. RD. DIV. NO.	CONT	SECT	JOB	HIGHWAY
	6	0231	03	156	IH-14
	STATE	DIST	COUNTY		SHEET NO.
	TEXAS	WACO	BELL		61

c:\txdot\pwworking\txdot3\patrick.jalufka\d0785500\Removal Layout (WAC).dgn 7/11/2025 4:36:21 PM
NODE

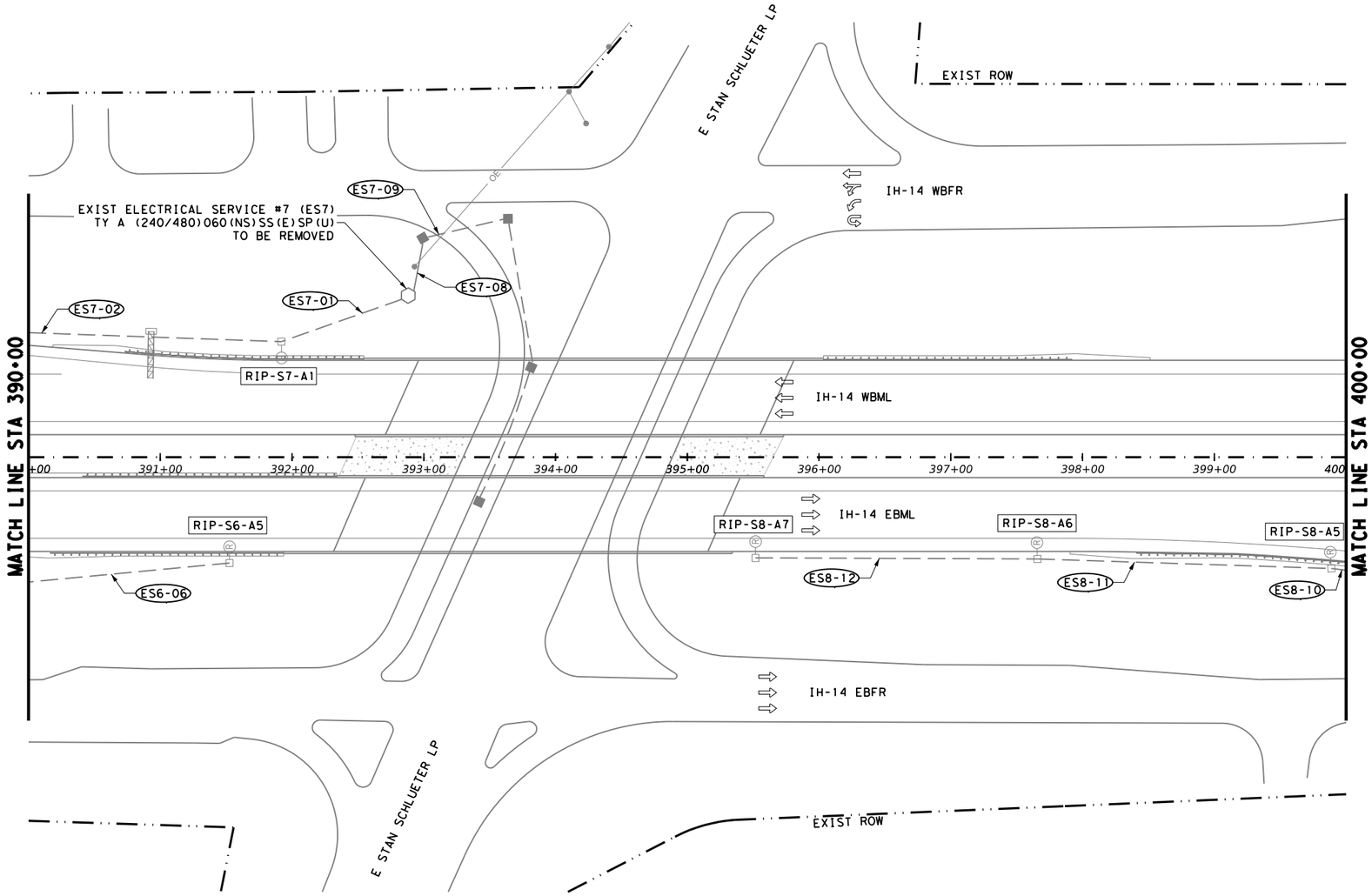

LEGEND

- EXIST TY A GROUND BOX TO BE REMOVED
- EXIST RDWY ILLUM ASSEM TO BE REMOVED (TRANS BASE)
- EXIST RDWY ILLUM ASSEM TO BE REMOVED (BRIDGE MOUNT)
- EXIST GROUND BOX (TY A)
- EXIST CONDUIT (TRENCHED)
- EXIST CONDUIT (BORED)
- EXIST RIGID METAL CONDUIT
- EXIST RDWY ILLUM ASSEM TO REMAIN (TRANS BASE)
- EXIST ELEC SERVICE

POLE DESIGNATION

RIP-S#-A#
- POLE #
- CIRCUIT #
- SERVICE #

CONDUIT DESIGNATION

ES#-##
- RUN #
- SERVICE #
- EXISTING CONDUIT

EXISTING CONDUIT AND CONDUCTOR RUNS

RUN NAME	SERVICE	CIRCUITS	RUN LENGTH	690 7144 REMOVE ABOVE-GROUND CONDUIT LF	0690 7150 REMOVE CONDUCTOR LF
ES6-06	ES6	A	153		459
ES7-01	ES7	A	102		306
ES7-02	ES7	A	192		576
ES7-08	ES7	B	44		132
ES7-09	ES7	B	66	NO WORK	
ES8-10	ES8	A	11		33
ES8-11	ES8	A	223		669
ES8-12	ES8	A	214		642
			SHEET TOTAL:		2817

SUMMARY OF REMOVAL ITEMS

BID CODE	DESCRIPTION	UNIT	QTY
610 7009	REMOVE RD IL ASM (TRANS-BASE)	EA	5
628 7002	REMOVE ELECTRICAL SERVICES	EA	1
690 7150	REMOVE CONDUCTOR	LF	2817

INTERIM REVIEW

THIS DOCUMENT IS RELEASED FOR THE PURPOSE OF INTERIM REVIEW UNDER THE AUTHORITY OF

PATRICK JALUFKA P.E., ON: 7/8/2025

IT IS NOT TO BE USED FOR CONSTRUCTION

PRELIMINARY NOT FOR CONSTRUCTION

© 2026 Texas Department of Transportation

REMOVAL LAYOUT

SCALE: 1" = 100' HORIZ. (0 25 50 100 FEET)

SHEET 16 OF 20

CHANGE ORDER	FED. RD. DIV. NO.	CONT	SECT	JOB	HIGHWAY
	6	0231	03	156	IH-14
	STATE	DIST	COUNTY		SHEET NO.
	TEXAS	WACO	BELL		62

c:\txdot\pw*online\txdot3\patrick.jalufka\d0785500\Removal Layout (WAC).dgn 7/11/2025 4:36:22 PM NODE

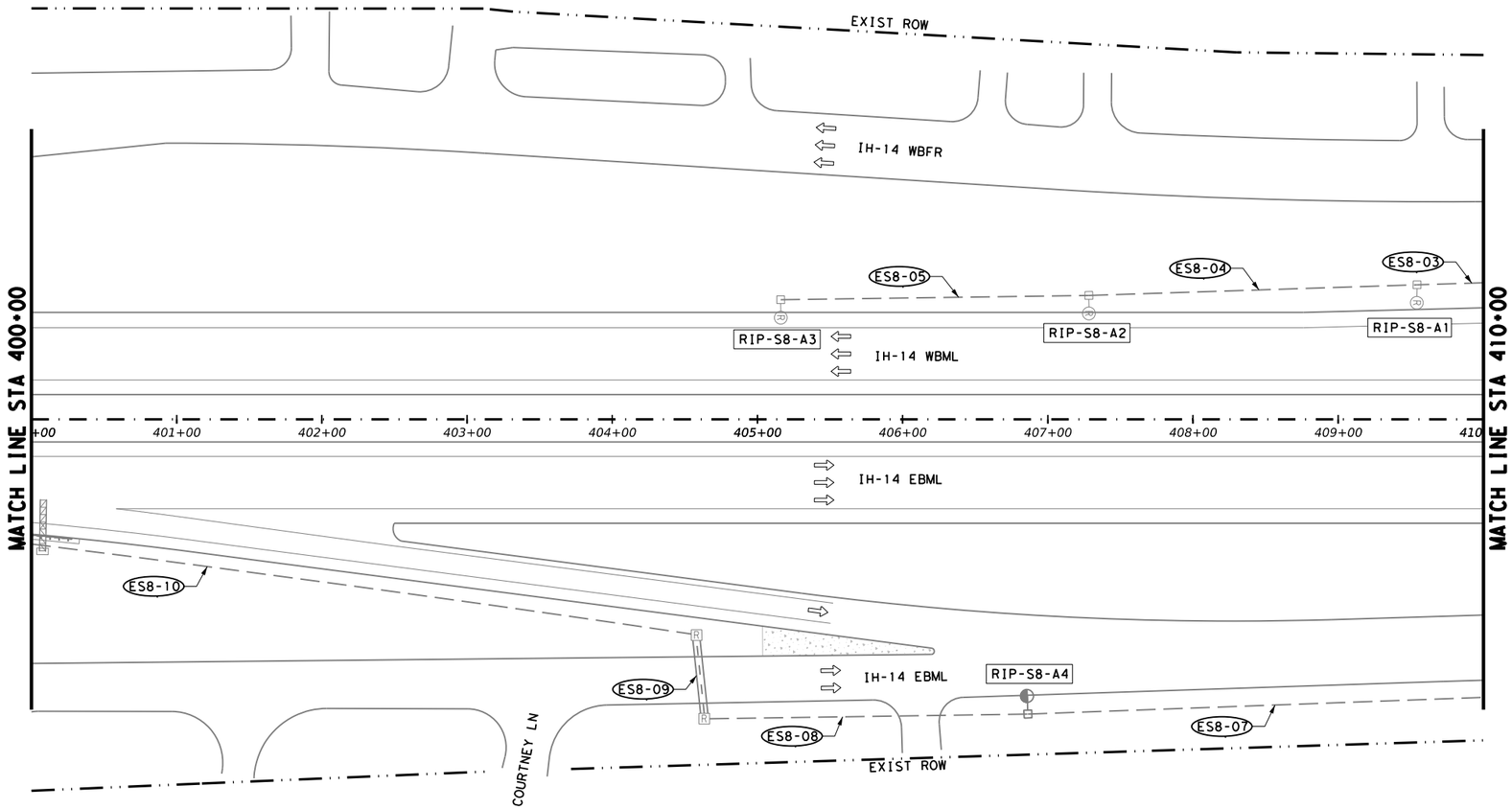

LEGEND

- EXIST TY A GROUND BOX TO BE REMOVED
- EXIST RDWY ILLUM ASSEM TO BE REMOVED (TRANS BASE)
- EXIST RDWY ILLUM ASSEM TO BE REMOVED (BRIDGE MOUNT)
- EXIST GROUND BOX (TY A)
- EXIST CONDUIT (TRENCHED)
- EXIST CONDUIT (BORED)
- EXIST RIGID METAL CONDUIT
- EXIST RDWY ILLUM ASSEM TO REMAIN (TRANS BASE)
- EXIST ELEC SERVICE

POLE DESIGNATION

RIP-S#-A#
- POLE #
- CIRCUIT #
- SERVICE #

CONDUIT DESIGNATION

ES#-##
- RUN #
- SERVICE #
- EXISTING CONDUIT

EXISTING CONDUIT AND CONDUCTOR RUNS					
				690	0690
				7144	7150
RUN NAME	SERVICE	CIRCUITS	RUN LENGTH	REMOVE ABOVE-GROUND CONDUIT	REMOVE CONDUCTOR
				LF	LF
ES8-03	ES8	A	46		138
ES8-04	ES8	A	226		678
ES8-05	ES8	A	212		636
ES8-07	ES8	A	314		942
ES8-08	ES8	A	223		669
ES8-09	ES8	A	58		174
ES8-10	ES8	A	462		1386
			SHEET TOTAL:		4623

SUMMARY OF REMOVAL ITEMS			
BID CODE	DESCRIPTION	UNIT	QTY
610 7009	REMOVE RD IL ASM (TRANS-BASE)	EA	3
624 7013	REMOVE GROUND BOX	EA	2
690 7150	REMOVE CONDUCTOR	LF	4623

INTERIM REVIEW

THIS DOCUMENT IS RELEASED FOR THE PURPOSE OF INTERIM REVIEW UNDER THE AUTHORITY OF

PATRICK JALUFKA P.E., ON: 7/11/2025

IT IS NOT TO BE USED FOR CONSTRUCTION

PRELIMINARY NOT FOR CONSTRUCTION

© 2026 Texas Department of Transportation

REMOVAL LAYOUT

SCALE: 0 25 50 100 FEET
1" = 100' HORIZ.

SHEET 17 OF 20

CHANGE ORDER	FED. RD. DIV. NO.	CONT	SECT	JOB	HIGHWAY
	6	0231	03	156	IH-14
	STATE	DIST	COUNTY		SHEET NO.
	TEXAS	WACO	BELL		63

c:\txdot\pwonline\txdot3\patrick.jalufka\d0785500\Removal Layout (WAC).dgn 7/11/2025 4:36:23 PM
NODE

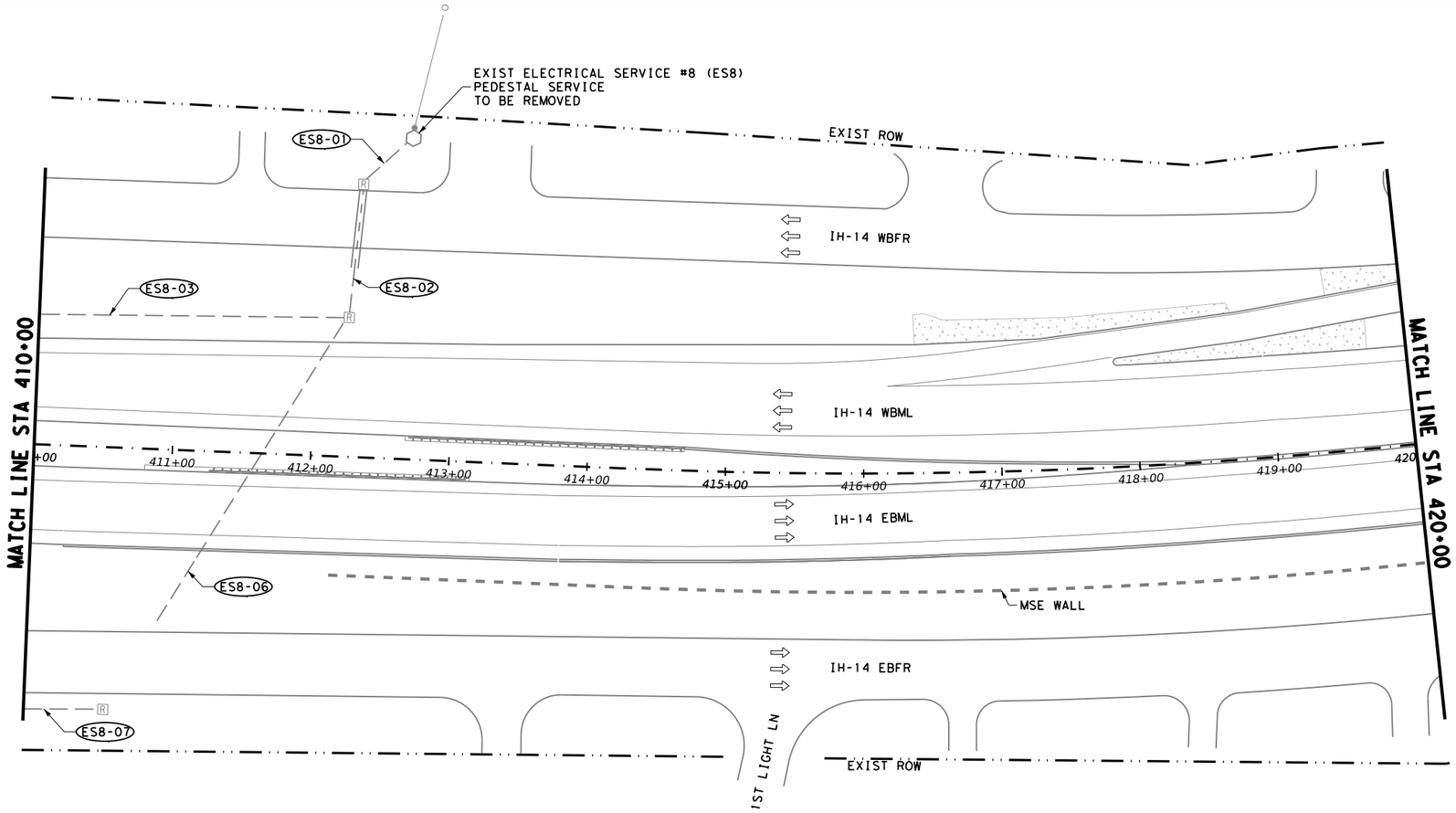

LEGEND

- EXIST TY A GROUND BOX TO BE REMOVED
- EXIST RDWY ILLUM ASSEM TO BE REMOVED (TRANS BASE)
- EXIST RDWY ILLUM ASSEM TO BE REMOVED (BRIDGE MOUNT)
- EXIST GROUND BOX (TY A)
- EXIST CONDUIT (TRENCHED)
- EXIST CONDUIT (BORED)
- EXIST RIGID METAL CONDUIT
- EXIST RDWY ILLUM ASSEM TO REMAIN (TRANS BASE)
- EXIST ELEC SERVICE

POLE DESIGNATION

RIP-S#-A#
- POLE #
- CIRCUIT #
- SERVICE #

CONDUIT DESIGNATION

ES#-##
- RUN #
- SERVICE #
- EXISTING CONDUIT

EXISTING CONDUIT AND CONDUCTOR RUNS					
RUN NAME	SERVICE	CIRCUITS	RUN LENGTH	690 7144 REMOVE ABOVE-GROUND CONDUIT LF	0690 7150 REMOVE CONDUCTOR LF
ES8-01	ES8	A	49		147
ES8-02	ES8	A	97		291
ES8-03	ES8	A	224		672
ES8-06	ES8	A	335		1005
ES8-07	ES8	A	57		171
			SHEET TOTAL:		2286

SUMMARY OF REMOVAL ITEMS			
BID CODE	DESCRIPTION	UNIT	QTY
624 7013	REMOVE GROUND BOX	EA	3
628 7002	REMOVE ELECTRICAL SERVICES	EA	1
690 7150	REMOVE CONDUCTOR	LF	2286

INTERIM REVIEW

THIS DOCUMENT IS RELEASED FOR THE PURPOSE OF INTERIM REVIEW UNDER THE AUTHORITY OF

PATRICK JALUFKA P.E., ON: 7/11/2025

IT IS NOT TO BE USED FOR CONSTRUCTION

PRELIMINARY NOT FOR CONSTRUCTION

© 2026 Texas Department of Transportation

REMOVAL LAYOUT

SCALE: 1" = 100' HORIZ. (0 25 50 100 FEET)

SHEET 18 OF 20

CHANGE ORDER	FED. RD. DIV. NO.	CONT	SECT	JOB	HIGHWAY
	6	0231	03	156	IH-14
	STATE	DIST	COUNTY		SHEET NO.
	TEXAS	WACO	BELL		64

c:\txdot\pw*online\txdot3\patrick.jalufka\d0785500\Removal Layout (WAC).dgn 7/11/2025 4:36:24 PM NODE

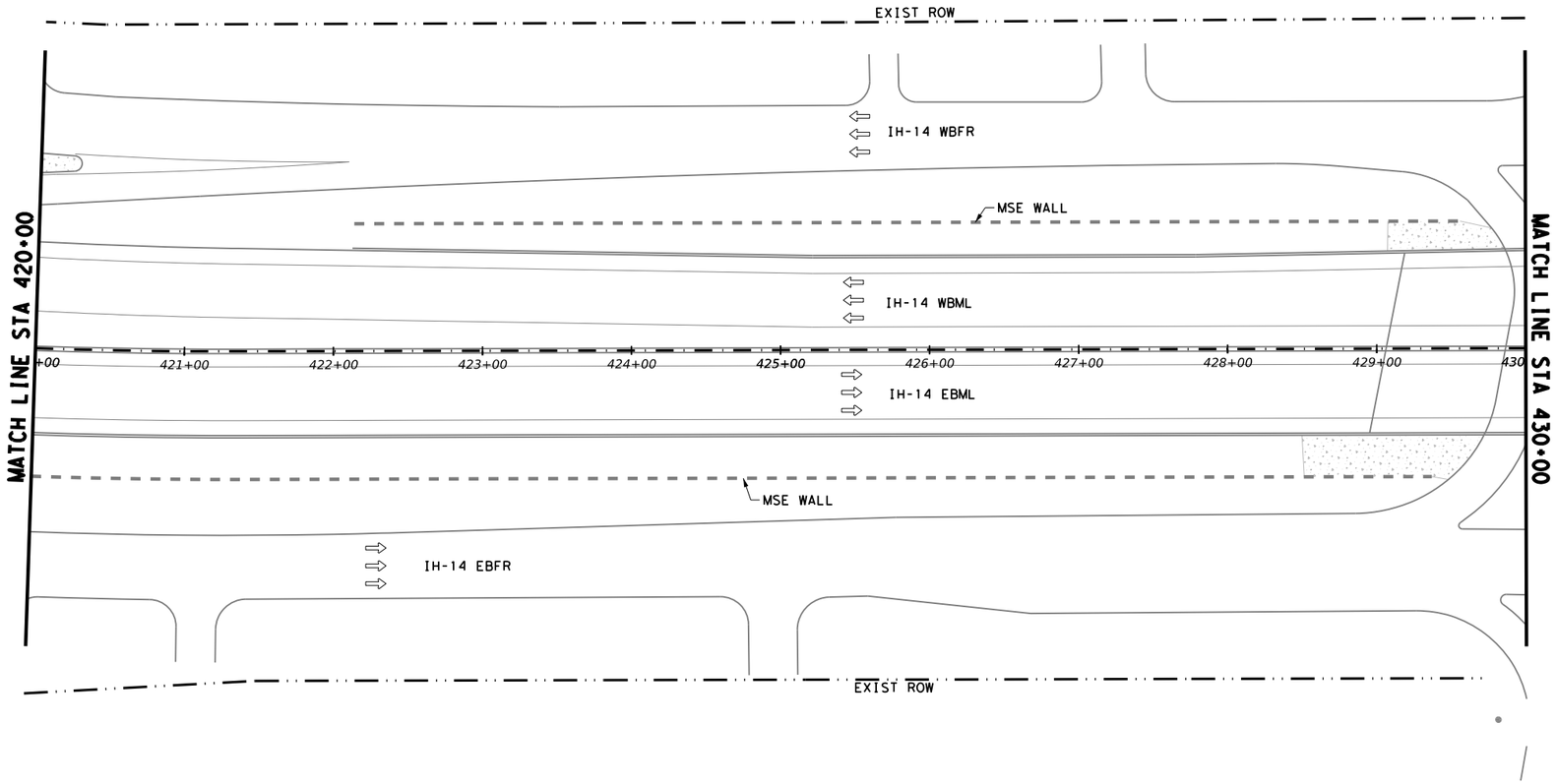

LEGEND

- EXIST TY A GROUND BOX TO BE REMOVED
- EXIST RDWY ILLUM ASSEM TO BE REMOVED (TRANS BASE)
- EXIST RDWY ILLUM ASSEM TO BE REMOVED (BRIDGE MOUNT)
- EXIST GROUND BOX (TY A)
- EXIST CONDUIT (TRENCHED)
- EXIST CONDUIT (BORED)
- EXIST RIGID METAL CONDUIT
- EXIST RDWY ILLUM ASSEM TO REMAIN (TRANS BASE)
- EXIST ELEC SERVICE

POLE DESIGNATION

RIP-S#-A#
- POLE #
- CIRCUIT #
- SERVICE #

CONDUIT DESIGNATION

ES#-##
- RUN #
- SERVICE #
- EXISTING CONDUIT

EXISTING CONDUIT AND CONDUCTOR RUNS					
RUN NAME	SERVICE	CIRCUITS	RUN LENGTH	690	0690
				7144	7150
				REMOVE ABOVE-GROUND CONDUIT	REMOVE CONDUCTOR
				LF	LF
NO REMOVALS THIS SHEET					

INTERIM REVIEW

THIS DOCUMENT IS RELEASED FOR THE PURPOSE OF INTERIM REVIEW UNDER THE AUTHORITY OF

PATRICK JALUFKA P.E., ON: 7/11/2025

IT IS NOT TO BE USED FOR CONSTRUCTION

PRELIMINARY NOT FOR CONSTRUCTION

© 2026 Texas Department of Transportation

REMOVAL LAYOUT

SCALE: 1" = 100' HORIZ. (0 25 50 100 FEET)

SHEET 19 OF 20

CHANGE ORDER	FED. RD. DIV. NO.	CONT	SECT	JOB	HIGHWAY
	6	0231	03	156	IH-14
	STATE	DIST	COUNTY		SHEET NO.
	TEXAS	WACO	BELL		65

c:\txdot\pwonline\txdot3\patrick.jalufka\d0785500\Removal Layout (WAC).dgn 7/11/2025 4:36:26 PM
NODE

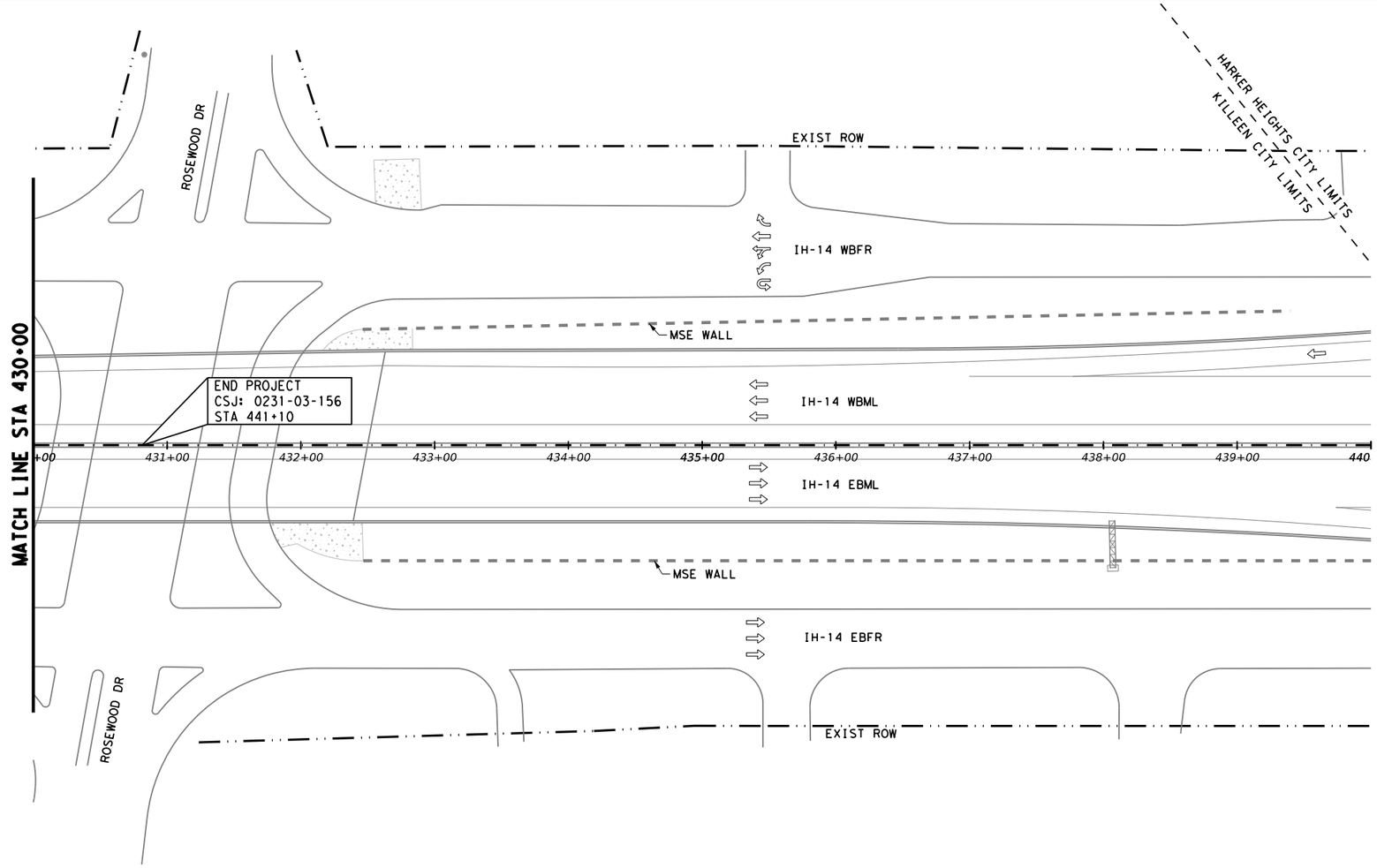

LEGEND

- EXIST TY A GROUND BOX TO BE REMOVED
- EXIST RDWY ILLUM ASSEM TO BE REMOVED (TRANS BASE)
- EXIST RDWY ILLUM ASSEM TO BE REMOVED (BRIDGE MOUNT)
- EXIST GROUND BOX (TY A)
- EXIST CONDUIT (TRENCHED)
- EXIST CONDUIT (BORED)
- EXIST RIGID METAL CONDUIT
- EXIST RDWY ILLUM ASSEM TO REMAIN (TRANS BASE)
- EXIST ELEC SERVICE

POLE DESIGNATION

RIP-S#-A#
- POLE #
- CIRCUIT #
- SERVICE #

CONDUIT DESIGNATION

ES#-##
- RUN #
- SERVICE #
- EXISTING CONDUIT

EXISTING CONDUIT AND CONDUCTOR RUNS					
RUN NAME	SERVICE	CIRCUITS	RUN LENGTH	690	0690
				7144	7150
				REMOVE ABOVE-GROUND CONDUIT	REMOVE CONDUCTOR
				LF	LF
NO REMOVALS THIS SHEET					

INTERIM REVIEW

THIS DOCUMENT IS RELEASED FOR THE PURPOSE OF INTERIM REVIEW UNDER THE AUTHORITY OF

PATRICK JALUFKA P.E., ON: 7/11/2025

IT IS NOT TO BE USED FOR CONSTRUCTION

PRELIMINARY NOT FOR CONSTRUCTION

© 2026 Texas Department of Transportation

REMOVAL LAYOUT

SCALE: 0 25 50 100 FEET
1" = 100' HORIZ.

SHEET 20 OF 20

CHANGE ORDER	FED. RD. DIV. NO.	CONT	SECT	JOB	HIGHWAY
	6	0231	03	156	IH-14
	STATE	DIST	COUNTY		SHEET NO.
	TEXAS	WACO	BELL		66

c:\txdot\pw*online\txdot3\patrick.jalufka\d0785500\Removal Layout (WAC).dgn 7/11/2025 4:36:28 PM
NODE

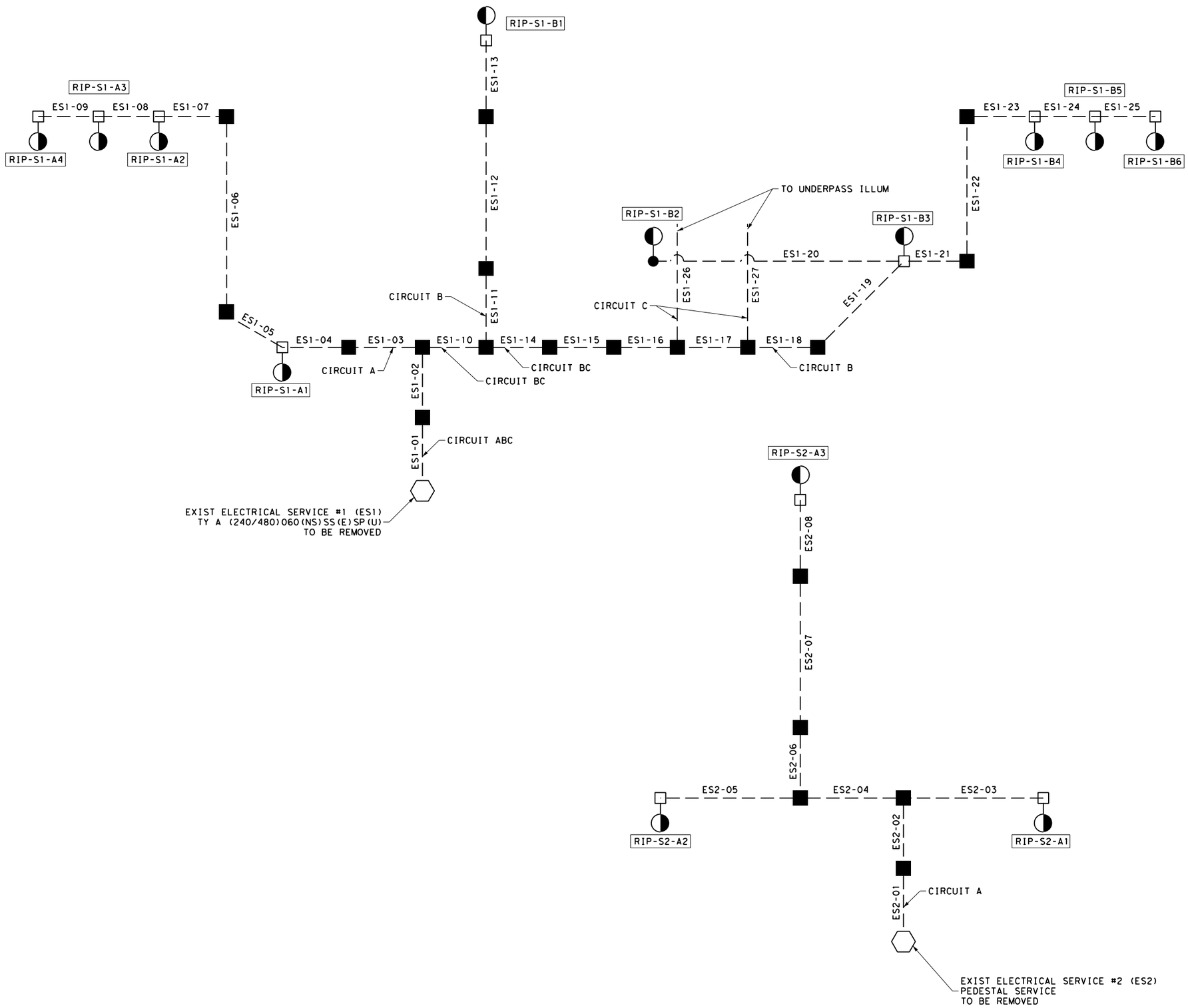

LEGEND

- GROUND BOX (TY A)
- CONDUIT
- RDWY ILLUM ASSEM (TRANS BASE)
- RDWY ILLUM ASSEM (BRIDGE MOUNT)
- ELEC SERVICE

POLE DESIGNATION

RIP-ES#-A#
- POLE #
- CIRCUIT #
- SERVICE #

CONDUIT DESIGNATION

ES#-##
- RUN #
- SERVICE #

INTERIM REVIEW

THIS DOCUMENT IS RELEASED FOR THE PURPOSE OF INTERIM REVIEW UNDER THE AUTHORITY OF

PATRICK JALUFKA P.E., ON: 7/11/2025

IT IS NOT TO BE USED FOR CONSTRUCTION

PRELIMINARY NOT FOR CONSTRUCTION

© 2026 Texas Department of Transportation

EXISTING ELECTRICAL SCHEMATIC

NOT TO SCALE

SHEET 1 OF 4

CHANGE ORDER	FED. RD. DIV. NO.	CONT	SECT	JOB	HIGHWAY
	6	0231	03	156	IH-14
	STATE	DIST	COUNTY		SHEET NO.
	TEXAS	WACO	BELL		67

c:\txdot\pw*online\txdot3\patrick.jalufka\d0785500\Electrical Schematic - Existing.dgn 7/11/2025 4:36:41 PM
NODE

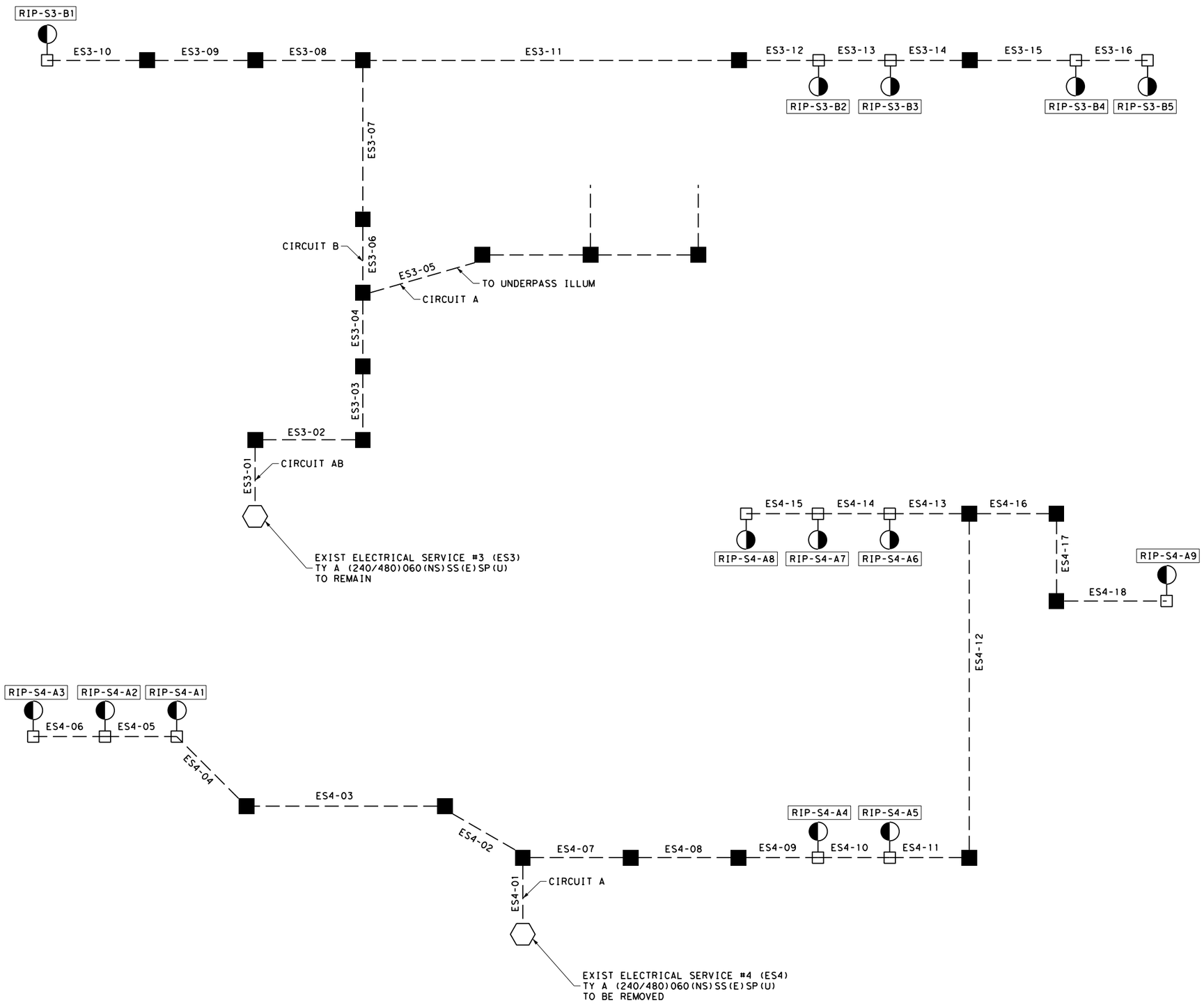

LEGEND

- GROUND BOX (TY A)
- CONDUIT
- RDWY ILLUM ASSEM (TRANS BASE)
- RDWY ILLUM ASSEM (BRIDGE MOUNT)
- ELEC SERVICE

POLE DESIGNATION

RIP-ES#-A#
- POLE #
- CIRCUIT #
- SERVICE #

CONDUIT DESIGNATION

ES#-##
- RUN #
- SERVICE #

INTERIM REVIEW

THIS DOCUMENT IS RELEASED FOR THE PURPOSE OF INTERIM REVIEW UNDER THE AUTHORITY OF

PATRICK JALUFKA P.E., ON: 7/11/2025

IT IS NOT TO BE USED FOR CONSTRUCTION

PRELIMINARY NOT FOR CONSTRUCTION

© 2026 Texas Department of Transportation

EXISTING ELECTRICAL SCHEMATIC

NOT TO SCALE

CHANGE ORDER	FED. RD. DIV. NO.	CONT	SECT	JOB	HIGHWAY
	6	0231	03	156	IH-14
	STATE	DIST	COUNTY		SHEET NO.
	TEXAS	WACO	BELL		68

c:\txdot\pwonline\txdot3\patrick.jalufka\d0785500\Electrical Schematic - Existing.dgn 7/11/2025 4:36:42 PM
NODE

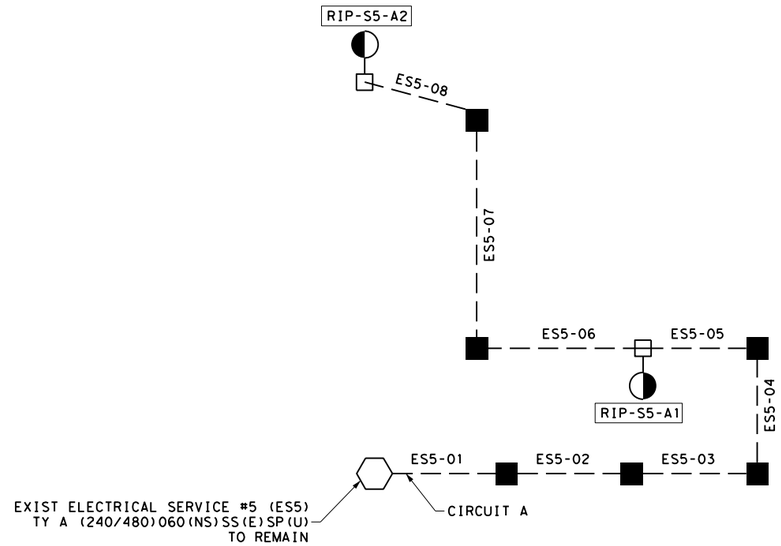

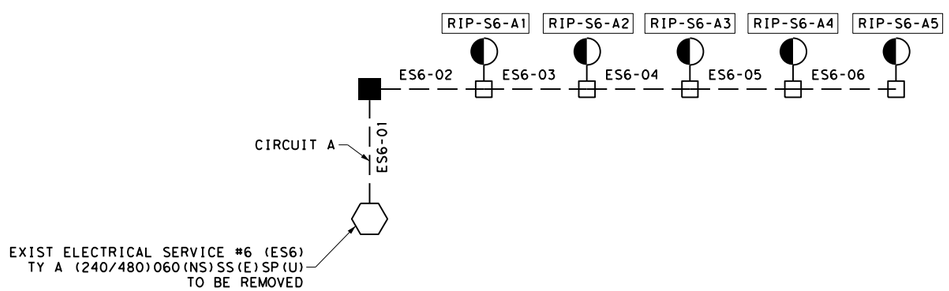

LEGEND

- GROUND BOX (TY A)
- CONDUIT
- RDWY ILLUM ASSEM (TRANS BASE)
- RDWY ILLUM ASSEM (BRIDGE MOUNT)
- ELEC SERVICE

POLE DESIGNATION

RIP-ES#-A#
- POLE #
- CIRCUIT #
- SERVICE #

CONDUIT DESIGNATION

ES#-##
- RUN #
- SERVICE #

INTERIM REVIEW

THIS DOCUMENT IS RELEASED FOR THE PURPOSE OF INTERIM REVIEW UNDER THE AUTHORITY OF

PATRICK JALUFKA P.E., ON: 7/11/2025

IT IS NOT TO BE USED FOR CONSTRUCTION

PRELIMINARY NOT FOR CONSTRUCTION

© 2026 Texas Department of Transportation

EXISTING ELECTRICAL SCHEMATIC

NOT TO SCALE

CHANGE ORDER	FED. RD. DIV. NO.	CONT	SECT	JOB	HIGHWAY
	6	0231	03	156	IH-14
	STATE	DIST	COUNTY		SHEET NO.
	TEXAS	WACO	BELL		69

c:\txdot\pw*online\txdot3\patrick.jalufka\d0785500\Electrical Schematic - Existing.dgn 7/11/2025 4:36:42 PM
NODE

c:\txdot\pwonline\txdot3\patrick.jalufka\d0785500\Electrical Schematic - Existing.dgn 7/11/2025 4:36:42 PM

LEGEND

- GROUND BOX (TY A)
- CONDUIT
- RDWY ILLUM ASSEM (TRANS BASE)
- RDWY ILLUM ASSEM (BRIDGE MOUNT)
- ELEC SERVICE

POLE DESIGNATION

RIP-ES#-A#
- POLE #
- CIRCUIT #
- SERVICE #

CONDUIT DESIGNATION

ES#-##
- RUN #
- SERVICE #

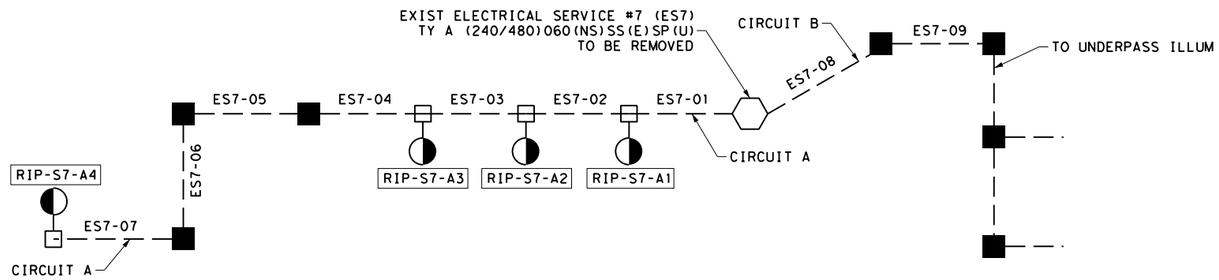

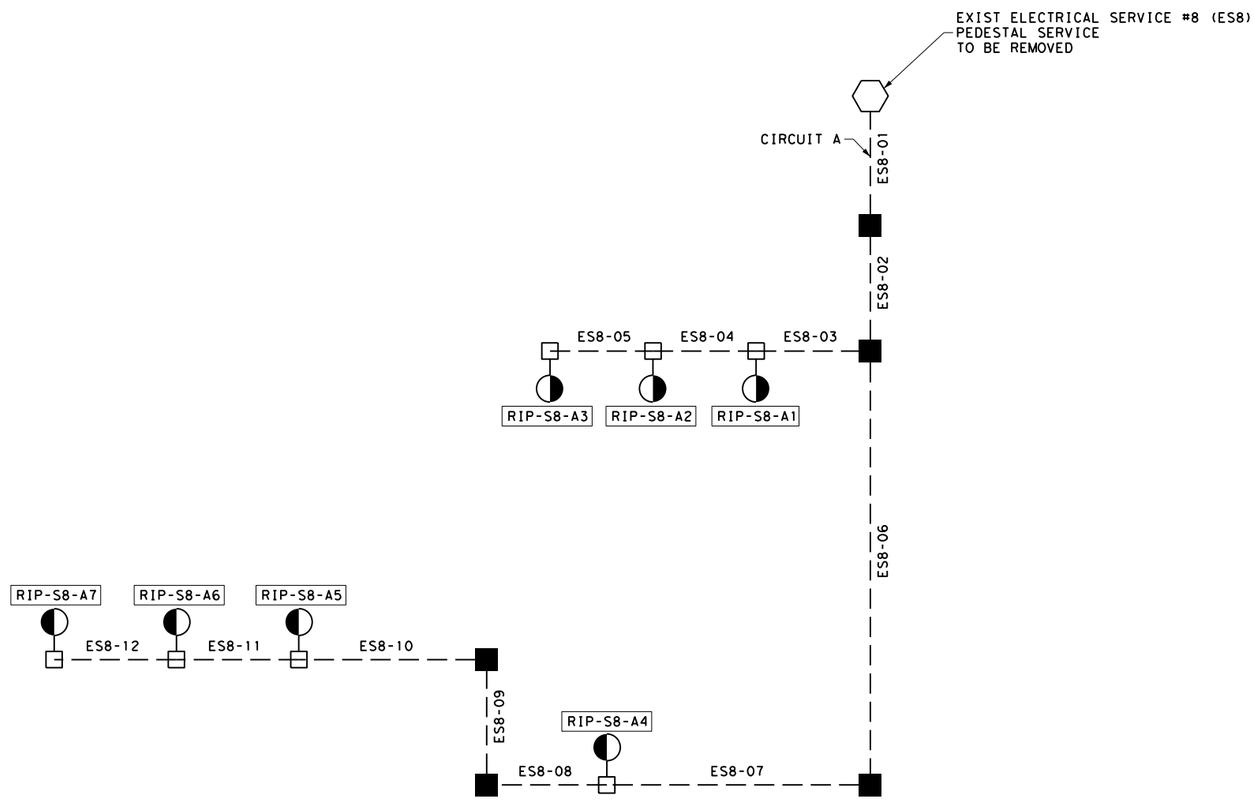

INTERIM REVIEW

THIS DOCUMENT IS RELEASED FOR THE PURPOSE OF INTERIM REVIEW UNDER THE AUTHORITY OF

PATRICK JALUFKA P.E., ON: 7/11/2025

IT IS NOT TO BE USED FOR CONSTRUCTION

PRELIMINARY NOT FOR CONSTRUCTION

© 2026 Texas Department of Transportation

EXISTING ELECTRICAL SCHEMATIC

NOT TO SCALE

CHANGE ORDER	FED. RD. DIV. NO.	CONT	SECT	JOB	HIGHWAY
	6	0231	03	156	IH-14
	STATE	DIST	COUNTY		SHEET NO.
	TEXAS	WACO	BELL		70

NODE

NOTES:

1. FOR CONTRACTOR INFORMATION ONLY.

DRILLING LOG

WinCore Version 3.3	County	Bell	Hole	043	District	Waco
	Highway	IH-14	Structure	Light Poles	Date	07/17/24
	CSJ	0231-03-155	Station		Grnd. Elev.	100.00 ft
			Offset		GW Elev.	N/A

Elev. (ft)	LOG	Texas Cone Penetrometer	Strata Description	Triaxial Test Lateral Press. (psi)	Triaxial Test Deviator Stress (psi)	Properties MC	Properties LL	Properties PI	Properties Wet Den. (pcf)	Additional Remarks
97.0			CLAY, very hard, tan, dry, with limestone fragments (CL)			6	34	19		PP = 4.5+ tsf
	5	50 (0.75) 50 (0.5)	LIMESTONE, tan, weathered, with clay seams							
90.0	10	50 (0.5) 50 (0.25)	LIMESTONE, gray, interbedded with shale	0	348	8			145	
	15	50 (0.5) 50 (0.25)		0	568					RUN: 10'-15'; REC: 75%; RQD: 30%
80.0	20	50 (0.25) 50 (0.25)	SHALE, gray, interbedded with limestone							RUN: 15'-20'; REC: 72%; RQD: 40%
	25	50 (0.5) 50 (0.25)		0	134	14			141	RUN: 20'-25'; REC: 65%; RQD: 15%
	30	50 (1.75) 50 (0.75)		0	203	9			148	RUN: 25'-30'; REC: 95%; RQD: 72%
	35	50 (0.5) 50 (0.25)								RUN: 30'-35'; REC: 98%; RQD: 58%
	40	50 (0.5) 50 (0.25)								RUN: 35'-40'; REC: 100%; RQD: 60%
	45	50 (0.5) 50 (0.25)								RUN: 40'-45'; REC: 80%; RQD: 13%
50.0	50	50 (0.5) 50 (0.25)								RUN: 45'-50'; REC: 65%; RQD: 7%
	55									

Remarks:
Latitude = 31.09808 Longitude = -97.73828

The ground water elevation was not determined during the course of this boring.

Driller: Rubicon **Logger: Omar Jimenez** **Organization: Raba-Kistner Consultants, Inc.**

DRILLING LOG

WinCore Version 3.3	County	Bell	Hole	044	District	Waco
	Highway	IH-14	Structure	Light Poles	Date	03/27/24
	CSJ	0231-03-155	Station		Grnd. Elev.	100.00 ft
			Offset		GW Elev.	N/A

Elev. (ft)	LOG	Texas Cone Penetrometer	Strata Description	Triaxial Test Lateral Press. (psi)	Triaxial Test Deviator Stress (psi)	Properties MC	Properties LL	Properties PI	Properties Wet Den. (pcf)	Additional Remarks
			CLAY, very stiff to very hard, dry to moist, brown to tan, sandy, with limestone lenses and fossil shells (CL)							
	5	50 (1.5) 50 (1)				8				
	10	29 (6) 45 (6)				8	33	19		% Passing #200 = 52
	15	50 (5) 50 (1.75)				23				
82.0	20	50 (1.75) 50 (1.75)	LIMESTONE, tan, weathered, with clay seams							
75.0	25	50 (1.75) 50 (0.5)				14				
	30	50 (0.75) 50 (0.5)	LIMESTONE, gray, with clay seams and fossil shells	0	824	4			136	RUN: 25'-30'; REC: 67%; RQD 0%
	35	50 (0.5) 50 (0.25)								RUN: 30'-35'; REC: 87%; RQD: 26%
	40	50 (0.5) 50 (0.25)								RUN: 35'-40'; REC: 50%; RQD: 0%
	45	50 (0.5) 50 (0)		0	871	5			133	RUN: 40'-45'; REC: 87%; RQD: 0%
50.0	50	50 (0.5) 50 (0.25)		0	621	4			140	RUN: 45'-50'; REC: 88%; RQD: 16%
	55									

Remarks:
Latitude = 31.09638 Longitude = -97.73733

The ground water elevation was not determined during the course of this boring.

Driller: Rubicon **Logger: Bradley Coffman** **Organization: Raba-Kistner, Inc.**

© 2026 Texas Department of Transportation

SOIL BORING LOGS

SHEET 1 OF 13

CHANGE ORDER	FED. RD. DIV. NO.	CONT	SECT	JOB	HIGHWAY
	6	0231	03	156	IH-14
	STATE	DIST	COUNTY		SHEET NO.
	TEXAS	WACO	BELL		71

c:\txdot\pw*online*\txdot3\patrick.jalufka\d0785500\Soil Boring Logs.dgn 7/11/2025 4:37:01 PM NODE

NOTES:

1. FOR CONTRACTOR INFORMATION ONLY.

DRILLING LOG

WinCore
Version 3.3

County	Bell	Hole	045	District	Waco
Highway	IH-14	Structure	Light Poles	Date	07/18/24
CSJ	0231-03-155	Station		Grnd. Elev.	100.00 ft
		Offset		GW Elev.	N/A

Elev. (ft)	LOG	Texas Cone Penetrometer	Strata Description	Triaxial Test Lateral Press. (psi)	Triaxial Test Deviator Stress (psi)	Properties MC	Properties LL	Properties PI	Properties Wet Den. (pcf)	Additional Remarks
			CLAY, hard, brown to tan, dry, sandy, with limestone fragments (CH)							
95.0	5	50 (3) 49 (6)				7	34	12		
			CLAY, stiff to hard, brown to tan, dry, with sand and limestone fragments (CL)							
	10	25 (6) 14 (6)								
	15	50 (3) 50 (4)								
	20	21 (6) 16 (6)				14	45	28		% Passing #200 = 75
77.0			LIMESTONE, tan, weathered, with clay seams							
	25	50 (0.5) 50 (0)								
										RUN: 25'-30'; REC: 35%; RQD: 0%
70.0	30	50 (0.13) 50 (0)	LIMESTONE, light gray							
				0	1799	9			148	RUN: 30'-35'; REC: 91%; RQD: 35%
	35	50 (0.25) 50 (0.13)								
				0	897	12			134	RUN: 35'-40'; REC: 76%; RQD: 47%
	40	50 (0.5) 50 (0.25)								
				0	1052	8			136	
				0	916	8			140	RUN: 40'-45'; REC: 100%; RQD: 97%
	45	50 (0.5) 50 (0)								
				0	768	10			140	
										RUN: 45'-50'; REC: 97%; RQD: 97%
50.0	50	50 (0.5) 50 (0)								
	55									

Remarks:
Latitude = 31.09586 Longitude = -97.73524

The ground water elevation was not determined during the course of this boring.

Driller: ETTL **Logger: Rabbi** **Organization: Raba-Kistner Consultants, Inc.**

DRILLING LOG

WinCore
Version 3.3

County	Bell	Hole	046	District	Waco
Highway	IH-14	Structure	Light Poles	Date	07/31/24
CSJ	0231-03-155	Station		Grnd. Elev.	100.00 ft
		Offset		GW Elev.	N/A

Elev. (ft)	LOG	Texas Cone Penetrometer	Strata Description	Triaxial Test Lateral Press. (psi)	Triaxial Test Deviator Stress (psi)	Properties MC	Properties LL	Properties PI	Properties Wet Den. (pcf)	Additional Remarks
			CLAY, very hard, dry to moist, dark brown, with limestone fragments, and trace sand (CH)			43	66	41		PP = 4.5 tsf; % Passing #200 = 55
97.0	5	13 (6) 20 (6)	CLAY, very stiff to very hard, dry, light brown to tan, with limestone fragments and trace sand (CL)	0	126	16	42	26	105	PP = 4.5 tsf
	10	50 (1.5) 50 (1.5)								
85.0	15	50 (2) 50 (2.5)				27	34	19		% Passing #200 = 69
			LIMESTONE, tan, weathered, with clay seams							
										RUN: 15'-20'; REC: 38%; RQD: 0%
80.0	20	50 (0.5) 50 (0.75)	LIMESTONE, gray, with fossil shells and some clay							
				0	706	7			142	RUN: 20'-25'; REC: 83%; RQD: 18%
	25	50 (1) 50 (0)								
				0	799	3			139	
										RUN: 25'-30'; REC: 88%; RQD: 64%
	30	50 (1.5) 50 (0.25)								
				0	769	3			142	RUN: 30'-35'; REC: 93%; RQD: 89%
	35	50 (0.25) 50 (0.25)								
				0	1712	10			142	RUN: 35'-40'; REC: 93%; RQD: 84%
	40	50 (0.25) 50 (0.25)								
				0	1203	5			143	RUN: 40'-45'; REC: 92%; RQD: 77%
	45	50 (0.5) 50 (0.25)								
										RUN: 45'-50'; REC: 94%; RQD: 12%
50.0	50	50 (0.5) 50 (0.25)								
	55									

Remarks:
Latitude = 31.09456 Longitude = -97.7336

The ground water elevation was not determined during the course of this boring.

Driller: Texas Geobore **Logger: Bryanna** **Organization: Raba-Kistner Consultants, Inc.**

© 2026 Texas Department of Transportation

SOIL BORING LOGS

SHEET 2 OF 13

CHANGE ORDER	FED. RD. DIV. NO.	CONT	SECT	JOB	HIGHWAY
	6	0231	03	156	IH-14
	STATE	DIST	COUNTY		SHEET NO.
	TEXAS	WACO	BELL		72

c:\txdot\pw*online\txdot3\patrick.jalufka\d0785500\Soil Boring Logs.dgn 7/11/2025 4:37:03 PM
NODE

NOTES:

1. FOR CONTRACTOR INFORMATION ONLY.

DRILLING LOG

WinCore Version 3.3	County	Bell	Hole	047	District	Waco
	Highway	IH-14	Structure	Light Poles	Date	03/27/24
	CSJ	0231-03-155	Station		Grnd. Elev.	100.00 ft
			Offset		GW Elev.	87.00 ft

Elev. (ft)	LOG	Texas Cone Penetrometer	Strata Description	Triaxial Test Lateral Press. (psi)	Triaxial Test Deviator Stress (psi)	Properties MC	Properties LL	Properties PI	Properties Wet Den. (pcf)	Additional Remarks
			CLAY, very stiff, dry to moist, brown to tan, with limestone fragments, ferrous staining, and fossil shells (CL)							
5		37 (6) 37 (6)				6				
10		30 (6) 24 (6)				13	39	23		PP = 4.5+ tsf; % Passing #200 = 86
87.0			SAND, very dense, dry to moist, tan, clayey, with limestone fragments (SC)							
15		50 (2.75) 50 (1)				4	31	17		PP = 2.0 tsf; % Passing #200 = 50
20		50 (1) 50 (0.5)				9	23	10		% Passing #200 = 48
77.0			CLAY, very hard, dry to moist, tan, sandy, with limestone fragments (CL)							
75.0 25		50 (1.75) 50 (0.5)	LIMESTONE, tan, weathered, with clay seams			17	25	11		% Passing #200 = 69
										RUN: 25'-30'; REC: 70%; RQD: 0%
30		50 (0.5) 50 (0.25)								
										RUN: 30'-35'; REC: 30%; RQD: 0%
65.0 35		50 (0.25) 50 (0.25)	LIMESTONE, dark gray, with fossil shells	0	407	4			137	
				0	682	8			143	RUN: 35'-40'; REC: 87%; RQD: 62%
40		50 (0.75) 50 (0.25)		0	1324	4			139	
				0	1414	4			137	RUN: 40'-45'; REC: 85%; RQD: 67%
45		50 (0.5) 50 (0.25)								
				0	1620	2			138	RUN: 45'-50'; REC: 97%; RQD: 57%
50.0 50		50 (0.25) 50 (0.25)								
55										

Remarks:
Latitude = 31.09404 Longitude = -97.73161

Any ground water elevation information provided on this boring log is representative of conditions existing on the day and for the specific location where this information was collected. The actual groundwater elevation may fluctuate due to time, climatic conditions, and/or construction activity.

Driller: Rubicon **Logger: Bradley Coffman** **Organization: Raba-Kistner, Inc.**

DRILLING LOG

WinCore Version 3.3	County	Bell	Hole	048	District	Waco
	Highway	IH-14	Structure	Light Poles	Date	04/17/24
	CSJ	0231-03-155	Station		Grnd. Elev.	100.00 ft
			Offset		GW Elev.	N/A

Elev. (ft)	LOG	Texas Cone Penetrometer	Strata Description	Triaxial Test Lateral Press. (psi)	Triaxial Test Deviator Stress (psi)	Properties MC	Properties LL	Properties PI	Properties Wet Den. (pcf)	Additional Remarks
			CLAY, soft, moist, dark brown, with gravel and limestone fragments (CH)							
5		8 (6) 10 (6)				30	82	57		PP = 2.5 tsf; % Passing #200 = 96
92.0			CLAY, very stiff, dry to moist, tan, with sand, fossil shells, calcareous deposits and limestone fragments (CL)							
10		20 (6) 50 (4.25)				13	38	23		% Passing #200 = 80
15		50 (1.75) 50 (0.75)				10	25	11		% Passing #200 = 76
82.0			LIMESTONE, tan to light gray, with fossil shells and clay seams							
20		50 (1.5) 50 (1.25)				10				
25		50 (0.5) 50 (0.25)								
30		50 (0.5) 50 (0.25)								
67.0			LIMESTONE, light gray to dark gray, with fossil shells and clay seams							
35		50 (0.25) 50 (0.25)		0	1094	8			145	
										RUN: 35'-40'; REC: 73%; RQD: 58%
40		50 (0.75) 50 (0.25)		0	780	3			141	
										RUN: 40'-45'; REC: 93%; RQD: 23%
45		50 (0.5) 50 (0.25)								
				0	748	7			143	RUN: 45'-50'; REC: 97%; RQD: 32%
50.0 50		50 (0.5) 50 (0.25)								
55										

Remarks:
Latitude = 31.09361 Longitude = -97.72954

The ground water elevation was not determined during the course of this boring.

Driller: Rubicon **Logger: Bradley Coffman** **Organization: Raba-Kistner, Inc.**

© 2026 Texas Department of Transportation

SOIL BORING LOGS

SHEET 3 OF 13

CHANGE ORDER	FED. RD. DIV. NO.	CONT	SECT	JOB	HIGHWAY
	6	0231	03	156	IH-14
	STATE	DIST	COUNTY		SHEET NO.
	TEXAS	WACO	BELL		73

c:\txdot\pw*online*txdot3\patrick.jalufka\d0785500\Soil Boring Logs.dgn 7/11/2025 4:37:03 PM NODE

NOTES:

1. FOR CONTRACTOR INFORMATION ONLY.

DRILLING LOG

WinCore
Version 3.3

County	Bell	Hole	049	District	Waco
Highway	IH-14	Structure	Light Poles	Date	03/28/24
CSJ	0231-03-155	Station		Grnd. Elev.	100.00 ft
		Offset		GW Elev.	N/A

Elev. (ft)	LOG	Texas Cone Penetrometer	Strata Description	Triaxial Test Lateral Press. (psi)	Triaxial Test Deviator Stress (psi)	Properties MC	Properties LL	Properties PI	Properties Wet Den. (pcf)	Additional Remarks
			CLAY, soft, moist, dark brown (CH)							
95.0 5		7 (6) 10 (6)				28	65	41		PP = 3.0 tsf; % Passing #200 = 95
			CLAY, soft to very hard, dry to moist, tan, with sand, ferrous staining, calcareous deposits, limestone lenses and fossil shells (CL)							
10		26 (6) 25 (6)				13	36	22		PP = 4.5+ tsf; % Passing #200 = 81
15		50 (0.75) 50 (0.25)				11				
82.0			LIMESTONE, tan, weathered, with clay seams							
80.0 20		50 (1.25) 50 (0.75)	LIMESTONE, light gray, vuggy, with clay seams							
				0	811	6			130	RUN: 20'-25'; REC: 78%; RQD: 14%
25		50 (0.5) 50 (0.25)								
										RUN: 25'-30'; REC: 77%; RQD: 0%
30		50 (0.75) 50 (0.5)								
										RUN: 30'-35'; REC: 45%; RQD: 7%
65.0 35		50 (0.5) 50 (0.25)	LIMESTONE, gray to dark gray, with fossil shells and some clay	0	790	3			141	
				0	486	9			145	RUN: 35'-40'; REC: 91%; RQD: 44%
40		50 (0.5) 50 (0.5)								
										RUN: 40'-45'; REC: 92%; RQD: 25%
45		50 (0.5) 50 (0.25)								
										RUN: 45'-50'; REC: 85%; RQD: 13%
50.0 50		50 (0.5) 50 (0.25)								
55										

Remarks:
Latitude = 31.09316 Longitude = -97.72758

The ground water elevation was not determined during the course of this boring.

Driller: Rubicon Logger: Bradley Coffman Organization: Raba-Kistner, Inc.

DRILLING LOG

WinCore
Version 3.3

County	Bell	Hole	050	District	Waco
Highway	IH-14	Structure	Light Poles	Date	03/28/24
CSJ	0231-03-155	Station		Grnd. Elev.	100.00 ft
		Offset		GW Elev.	N/A

Elev. (ft)	LOG	Texas Cone Penetrometer	Strata Description	Triaxial Test Lateral Press. (psi)	Triaxial Test Deviator Stress (psi)	Properties MC	Properties LL	Properties PI	Properties Wet Den. (pcf)	Additional Remarks
			CLAY, stiff to very hard, dry to moist, brown to tan, sandy, with ferrous staining, fossil shells, calcareous deposits and limestone lenses (CL)							
5		12 (6) 12 (6)				10	34	19		PP = 4.5+ tsf; % Passing #200 = 66
10		28 (6) 23 (6)				9	32	17		PP = 4.5+ tsf; % Passing #200 = 64
15		50 (1.75) 50 (1.5)				13				
82.0			LIMESTONE, tan, weathered, with clay seams							
80.0 20		50 (1.75) 50 (1)	LIMESTONE, light gray, with fossil shells and clay seams							
										RUN: 20'-25'; REC: 33%; RQD: 0%
25		50 (0.5) 50 (0.25)								
										RUN: 25'-30'; REC: 60%; RQD: 0%
30		50 (0.5) 50 (0.5)								
										RUN: 30'-35'; REC: 55%; RQD: 0%
65.0 35		50 (1.25) 50 (1)	LIMESTONE, gray to dark gray, with fossil shells							
										RUN: 35'-40'; REC: 42%; RQD: 21%
40		50 (0.5) 50 (0.25)		0	1214	1			135	
										RUN: 40'-45'; REC: 84%; RQD: 48%
45		50 (0.5) 50 (0.5)		0	919	9			146	
										RUN: 45'-50'; REC: 78%; RQD: 0%
50.0 50		50 (0.75) 50 (0.5)								
55										

Remarks:
Latitude = 31.09265 Longitude = -97.72559

The ground water elevation was not determined during the course of this boring.

Driller: Rubicon Logger: Bradley Coffman Organization: Raba-Kistner, Inc.

© 2026 Texas Department of Transportation

SOIL BORING LOGS

SHEET 4 OF 13

CHANGE ORDER	FED. RD. DIV. NO.	CONT	SECT	JOB	HIGHWAY
	6	0231	03	156	IH-14
	STATE	DIST	COUNTY		SHEET NO.
	TEXAS	WACO	BELL		74

c:\txdot\pw*online\txdot3\patrick.jalufka\d0785500\Soil Boring Logs.dgn 7/11/2025 4:37:04 PM NODE

NOTES:

1. FOR CONTRACTOR INFORMATION ONLY.

DRILLING LOG

WinCore
Version 3.3

County	Bell	Hole	051	District	Waco
Highway	IH-14	Structure	Light Poles	Date	07/18/24
CSJ	0231-03-155	Station		Grnd. Elev.	100.00 ft
		Offset		GW Elev.	N/A

Elev. (ft)	LOG	Texas Cone Penetrometer	Strata Description	Triaxial Test Lateral Press. (psi)	Triaxial Test Deviator Stress (psi)	Properties MC	Properties LL	Properties PI	Properties Wet Den. (pcf)	Additional Remarks
			CLAY, stiff, brown, dry, with sand and limestone fragments (CL)			17	49	29		PP = 4.5+ tsf; % Passing #200 = 80
5		17 (6) 22 (6)								
10		50 (5) 50 (3)				14	46	32		% Passing #200 = 77
87.0			CLAY, very stiff to very hard, tan, dry to moist, sandy, with limestone fragments (CL)							
15		22 (6) 26 (6)				16	44	27		% Passing #200 = 58
82.0			LIMESTONE, tan, weathered, with clay seams							
80.0 20		26 (6) 50 (4)	LIMESTONE, tan to light gray, with some clay							
25		50 (1) 50 (0.5)								
				0	885	9			140	RUN: 25'-30'; REC: 63%; RQD: 10%
30		50 (1) 50 (3)								
										RUN: 30'-35'; REC: 53%; RQD: 0%
35		50 (0.5) 50 (0.25)		0	896	8			134	
										RUN: 35'-40'; REC: 80%; RQD: 24%
60.0 40		50 (0) 50 (0)	LIMESTONE, light gray							
				0	485	10			140	RUN: 40'-45'; REC: 98%; RQD: 29%
45		50 (0) 50 (0)								
				0	1394	4			144	RUN: 45'-50'; REC: 96%; RQD: 75%
50.0 50		50 (0) 50 (0.5)								
55										

Remarks:
Latitude = 31.09265 Longitude = -97.72342

The ground water elevation was not determined during the course of this boring.

Driller: ETTL Logger: Rabbi Organization: Raba-Kistner Consultants, Inc.

DRILLING LOG

WinCore
Version 3.3

County	Bell	Hole	052	District	Waco
Highway	IH-14	Structure	Light Poles	Date	03/29/24
CSJ	0231-03-155	Station		Grnd. Elev.	100.00 ft
		Offset		GW Elev.	N/A

Elev. (ft)	LOG	Texas Cone Penetrometer	Strata Description	Triaxial Test Lateral Press. (psi)	Triaxial Test Deviator Stress (psi)	Properties MC	Properties LL	Properties PI	Properties Wet Den. (pcf)	Additional Remarks
			CLAY, stiff, moist, dark brown, with sand (CH)							
95.5 5		12 (6) 12 (6)	CLAY, stiff, dry to moist, tan, with sand, ferrous staining, calcareous deposits, fossil shells and limestone fragments (CL)			26	65	40		PP = 4.0 tsf; % Passing #200 = 81
10		20 (6) 19 (6)				14	29	14		PP = 4.5+ tsf; % Passing #200 = 79
87.0			LIMESTONE, tan, weathered, with fossil shells and clay seams							
15		50 (2.25) 50 (1)								
20		50 (1.75) 50 (0.75)								
77.0			LIMESTONE, tan to light gray, with fossil shells and clay seams							
25		50 (1.25) 50 (0.75)								
30		50 (0.5) 50 (0.25)								
35		50 (0.5) 50 (0.25)								
65.0			LIMESTONE, dark gray to gray, with fossil shells	0	794	2			139	
				0	436	6			142	RUN: 35'-40'; REC: 87%; RQD: 66%
40		50 (0.25) 50 (0.25)								
				0	978	5			139	
										RUN: 40'-45'; REC: 88%; RQD: 69%
45		50 (0.5) 50 (0.25)								
				0	1719	2			134	
										RUN: 45'-50'; REC: 100%; RQD: 76%
50.0 50		50 (0.5) 50 (0.25)		0	522	2			135	
55										

Remarks:
Latitude = 31.09139 Longitude = -97.72178

The ground water elevation was not determined during the course of this boring.

Driller: Rubicon Logger: Bradley Coffman Organization: Raba-Kistner, Inc.

© 2026 Texas Department of Transportation

SOIL BORING LOGS

SHEET 5 OF 13

CHANGE ORDER	FED. RD. DIV. NO.	CONT	SECT	JOB	HIGHWAY
	6	0231	03	156	IH-14
	STATE	DIST	COUNTY		SHEET NO.
	TEXAS	WACO	BELL		75

c:\txdot\pwonline\txdot3\patrick.jalufka\d0785500\Soil Boring Logs.dgn 7/11/2025 4:37:05 PM
NODE

NOTES:

1. FOR CONTRACTOR INFORMATION ONLY.

DRILLING LOG

WinCore
Version 3.3

County	Bell	Hole	053	District	Waco
Highway	IH-14	Structure	Light Poles	Date	07/19/24
CSJ	0231-03-155	Station		Grnd. Elev.	100.00 ft
		Offset		GW Elev.	N/A

Elev. (ft)	LOG	Texas Cone Penetrometer	Strata Description	Triaxial Test Lateral Press. (psi)	Triaxial Test Deviator Stress (psi)	Properties MC	Properties LL	Properties PI	Properties Wet Den. (pcf)	Additional Remarks
97.0			CLAY, very hard, brown, dry to moist, with sand and limestone fragments (CL)			18	42	23		PP = 4.5 tsf
	5	50 (1) 50 (0.5)	LIMESTONE, tan, weathered, with clay seams							
	10	50 (0.25) 50 (0)								
										RUN: 10'-15'; REC: 25%; RQD: 0%
85.0	15	50 (0.25) 50 (0.25)	LIMESTONE, gray	0	693	13			141	
										RUN: 15'-20'; REC: 73%; RQD: 15%
	20	50 (0.5) 50 (0.25)								
				0	452	10			140	RUN: 20'-25'; REC: 90%; RQD: 18%
	25	50 (0.25) 50 (0)								
										RUN: 25'-30'; REC: 58%; RQD: 0%
	30	50 (0.25) 50 (0.25)								
				0	793	8			144	RUN: 30'-35'; REC: 90%; RQD: 88%
	35	50 (0.25) 50 (0)								
										RUN: 35'-40'; REC: 83%; RQD: 67%
	40	50 (0.5) 50 (0)		0	1155	8			143	
										RUN: 40'-45'; REC: 80%; RQD: 22%
	45	50 (0.25) 50 (0)		0	1576	8			138	
										RUN: 45'-50'; REC: 83%; RQD: 59%
50.0	50	50 (0.25) 50 (0)								
	55									

Remarks:
Latitude = 31.09126 Longitude = -97.71951

The ground water elevation was not determined during the course of this boring.

Driller: Texas Geobore Logger: Bryanna Organization: Raba-Kistner Consultants, Inc.

DRILLING LOG

WinCore
Version 3.3

County	Bell	Hole	054	District	Waco
Highway	IH-14	Structure	Light Poles	Date	07/30/24
CSJ	0231-03-155	Station		Grnd. Elev.	100.00 ft
		Offset		GW Elev.	N/A

Elev. (ft)	LOG	Texas Cone Penetrometer	Strata Description	Triaxial Test Lateral Press. (psi)	Triaxial Test Deviator Stress (psi)	Properties MC	Properties LL	Properties PI	Properties Wet Den. (pcf)	Additional Remarks
			CLAY, soft, tan to brown, dry to moist, with sand and limestone fragments (CL)			17	49	28		% Passing #200 = 77
	5	5 (6) 13 (6)				11	32	10		
91.5										
90.0	10	50 (0.5) 50 (0.5)	CLAY, very hard, dry to moist, dark brown, sandy (CH)			30	69	44		% Passing #200 = 58
			LIMESTONE, tan, with clay seams							
85.0	15	50 (0.5) 50 (0.5)	LIMESTONE, fossiliferous, gray, interbedded with shale	0	591	2			144	
										RUN: 15'-20'; REC: 88%; RQD: 71%
	20	50 (0.5) 50 (0.25)								
				0	489	5			145	RUN: 20'-25'; REC: 100%; RQD: 72%
	25	50 (0.5) 50 (0.5)								
				0	871	9			144	RUN: 25'-30'; REC: 68%; RQD: 56%
70.0	30	50 (0.5) 50 (0.5)	LIMESTONE, light gray, interbedded with shale							
										RUN: 30'-35'; REC: 98%; RQD: 91%
	35	50 (0.5) 50 (0.5)								
										RUN: 35'-40'; REC: 87%; RQD: 31%
	40	50 (2) 50 (1)		0	352	7			148	
										RUN: 40'-45'; REC: 85%; RQD: 59%
	45	50 (0.5) 50 (0.5)		0	919	5			147	
										RUN: 45'-50'; REC: 62%; RQD: 18%
50.0	50	50 (2) 50 (2)		0	766	4			146	
	55									

Remarks:
Latitude = 31.09034 Longitude = -97.71774

The ground water elevation was not determined during the course of this boring.

Driller: Texas Geobore Logger: Bryanna Organization: Raba-Kistner Consultants, Inc.

© 2026 Texas Department of Transportation

SOIL BORING LOGS

SHEET 6 OF 13

CHANGE ORDER	FED. RD. DIV. NO.	CONT	SECT	JOB	HIGHWAY
	6	0231	03	156	IH-14
	STATE	DIST	COUNTY		SHEET NO.
	TEXAS	WACO	BELL		76

c:\txdot\pw*online\txdot3\patrick.jalufka\d0785500\Soil Boring Logs.dgn 7/11/2025 4:37:06 PM
NODE

NOTES:

1. FOR CONTRACTOR INFORMATION ONLY.

DRILLING LOG

WinCore Version 3.3	County	Bell	Hole	055	District	Waco
	Highway	IH-14	Structure	Light Poles	Date	04/18/24
	CSJ	0231-03-155	Station		Grnd. Elev.	100.00 ft
			Offset		GW Elev.	N/A

Elev. (ft)	LOG	Texas Cone Penetrometer	Strata Description	Triaxial Test Lateral Press. (psi)	Triaxial Test Deviator Stress (psi)	Properties MC	Properties LL	Properties PI	Properties Wet Den. (pcf)	Additional Remarks
			CLAY, very hard, dry to moist, orange, with fossil shells and limestone gravel (CL)							
5		50 (1) 50 (0.25)				18	37	17		PP = 4.5+ tsf; % Passing #200 = 94
93.0			LIMESTONE, light tan, with fossil shells							
10		50 (0.25) 50 (0.25)				14				
15		50 (0.5) 50 (0.25)				10				
81.0										
20		50 (0.5) 50 (0.25)	LIMESTONE, dark gray, with fossil shells, interbedded shale and clay seams	0	706	2			138	RUN: 20'-25'; REC: 92%; RQD: 87%
25		50 (0.5) 50 (0.25)		0	673	2			144	RUN: 25'-30'; REC: 100%; RQD: 73%
30		50 (0.75) 50 (0.5)		0	558	1			131	RUN: 30'-35'; REC: 88%; RQD: 88%
35		50 (0.5) 50 (0.25)		0	1022	3			136	RUN: 35'-40'; REC: 97%; RQD: 97%
40		50 (0.5) 50 (0.25)								
58.0			SHALE, dark gray, with fossil shells and interbedded limestone lenses							
55.0 45		50 (0.25) 50 (0.25)		0	481	7			147	RUN: 40'-45'; REC: 82%; RQD: 58%
			LIMESTONE, dark gray, with fossil shells							
50.0 50		50 (0.25) 50 (0.25)								RUN: 45'-50'; REC: 98%; RQD: 87%
55										

Remarks:
Latitude = 31.08857 Longitude = -97.71589

The ground water elevation was not determined during the course of this boring.

Driller: Rubicon **Logger: Bradley Coffman** **Organization: Raba-Kistner, Inc.**

DRILLING LOG

WinCore Version 3.3	County	Bell	Hole	056	District	Waco
	Highway	IH-14	Structure	Light Poles	Date	07/17/24
	CSJ	0231-03-155	Station		Grnd. Elev.	100.00 ft
			Offset		GW Elev.	N/A

Elev. (ft)	LOG	Texas Cone Penetrometer	Strata Description	Triaxial Test Lateral Press. (psi)	Triaxial Test Deviator Stress (psi)	Properties MC	Properties LL	Properties PI	Properties Wet Den. (pcf)	Additional Remarks
			CLAY, very stiff to very hard, dry, tan to brown, sandy, with limestone fragments (CL)							PP = 3.5 tsf
5		50 (0.75) 50 (0.25)								PP = 4.5 tsf
10		50 (0.75) 50 (0.25)								RUN: 10'-15'; REC: 87%; RQD: 54%
85.0 15		50 (0.5) 50 (0.25)				38	33	17		% Passing #200 = 57
			LIMESTONE, gray, with shell fragments							RUN: 15'-20'; REC: 89%; RQD: 67%
20		50 (0.25) 50 (0.25)		0	1160	8			135	RUN: 20'-25'; REC: 92%; RQD: 89%
25		50 (0.5) 50 (0.25)								RUN: 25'-30'; REC: 100%; RQD: 89%
30		50 (0.5) 50 (0.25)								RUN: 30'-35'; REC: 98%; RQD: 88%
35		50 (0.5) 50 (0.5)		0	814	10			153	RUN: 35'-40'; REC: 83%; RQD: 55%
40		50 (0.5) 50 (0.25)								RUN: 40'-45'; REC: 88%; RQD: 47%
45		50 (0.25) 50 (0.25)		0	1282	6			139	RUN: 45'-50'; REC: 90%; RQD: 56%
50.0 50		50 (0.5) 50 (0.5)								
55										

Remarks:
Latitude = 31.08808 Longitude = -97.71357

The ground water elevation was not determined during the course of this boring.

Driller: Rubicon **Logger: Bryanna** **Organization: Raba-Kistner Consultants, Inc.**

© 2026 Texas Department of Transportation

SOIL BORING LOGS

SHEET 7 OF 13

CHANGE ORDER	FED. RD. DIV. NO.	CONT	SECT	JOB	HIGHWAY
	6	0231	03	156	IH-14
	STATE	DIST	COUNTY		SHEET NO.
	TEXAS	WACO	BELL		77

c:\txdot\pwonline\txdot3\patrick.jalufka\d0785500\Soil Boring Logs.dgn 7/11/2025 4:37:07 PM NODE

NOTES:

1. FOR CONTRACTOR INFORMATION ONLY.

DRILLING LOG

WinCore	County	Bell	Hole	057	District	Waco
Version 3.3	Highway	IH-14	Structure	Light Poles	Date	07/19/24
	CSJ	0231-03-155	Station		Grnd. Elev.	100.00 ft
			Offset		GW Elev.	N/A

Elev. (ft)	LOG	Texas Cone Penetrometer	Strata Description	Triaxial Test Lateral Press. (psi)	Triaxial Test Deviator Stress (psi)	Properties MC	Properties LL	Properties PI	Properties Wet Den. (pcf)	Additional Remarks
			CLAY, very stiff, brown to tan, dry, with sand and limestone fragments (CH)			23	66	42		PP = 4.5+ tsf; % Passing #200 = 76
95.0 5		35 (6) 37 (6)				15	50	33		
			CLAY, very hard, tan, dry, with limestone fragments (CH)							
90.0 10		50 (3) 50 (0.5)				19	56	37		% Passing #200 = 93
			CLAY, very hard, tan, dry, sandy, with limestone fragments (CL)							
85.0 15		50 (0.25) 50 (0.13)					41	25		% Passing #200 = 58
			LIMESTONE, tan, weathered, with clay seams							
				0	909	11			143	RUN: 15'-20'; REC: 50%; RQD: 23%
20		50 (1.5) 50 (0.25)								
79.0			LIMESTONE, light gray, interbedded with shale							
										RUN: 20'-25'; REC: 77%; RQD: 27%
25		50 (0.5) 50 (0)		0	978	9			138	
										RUN: 25'-30'; REC: 72%; RQD: 19%
30		50 (1.5) 50 (0)								
										RUN: 30'-35'; REC: 82%; RQD: 54%
35		50 (0.5) 50 (0)								
										RUN: 35'-40'; REC: 82%; RQD: 18%
40		50 (0) 50 (0)								
										RUN: 40'-45'; REC: 77%; RQD: 40%
45		50 (0) 50 (0)								
										RUN: 45'-50'; REC: 100%; RQD: 90%
50.0 50		50 (0.5) 50 (0)		0	676	6			143	
55										

Remarks:
Latitude = 31.08722 Longitude = -97.71174

The ground water elevation was not determined during the course of this boring.

Driller: ETTL **Logger: Rabbi** **Organization: Raba-Kistner Consultants, Inc.**

DRILLING LOG

WinCore	County	Bell	Hole	058	District	Waco
Version 3.3	Highway	IH-14	Structure	Light Poles	Date	07/31/24
	CSJ	0231-03-155	Station		Grnd. Elev.	100.00 ft
			Offset		GW Elev.	N/A

Elev. (ft)	LOG	Texas Cone Penetrometer	Strata Description	Triaxial Test Lateral Press. (psi)	Triaxial Test Deviator Stress (psi)	Properties MC	Properties LL	Properties PI	Properties Wet Den. (pcf)	Additional Remarks
			SAND, very dense, moist, tan, clayey (SC)			20	69	48		PP = 4.5 tsf; % Passing #200 = 47
98.0			CLAY, very hard, moist, tan, with limestone fragments (CH)							
95.0 5		50 (1.5) 50 (1)				25	78	55		PP = 3.0 tsf
			CLAY, very hard, dry to moist, tan, with limestone fragments (CL)							
90.0 10		50 (1.5) 50 (1)				31	32	17		% Passing #200 = 63
			LIMESTONE, tan, with clay seams							
										RUN: 10'-15'; REC: 58%; RQD: 15%
15		50 (1) 50 (1)								
				0	549	12			139	
										RUN: 15'-20'; REC: 93%; RQD: 34%
20		50 (1) 50 (0.5)								
										RUN: 20'-25'; REC: 72%; RQD: 17%
75.0 25		50 (0.5) 50 (0.75)		0	1055	7			144	
			LIMESTONE, gray, interbedded with shale							
										RUN: 25'-30'; REC: 88%; RQD: 79%
30		50 (0.5) 50 (0.5)								
										RUN: 30'-35'; REC: 88%; RQD: 67%
35		50 (1) 50 (1)								
										RUN: 35'-40'; REC: 93%; RQD: 87%
40		50 (0.5) 50 (0.5)		0	491	8			140	
										RUN: 40'-45'; REC: 88%; RQD: 0%
45		50 (1) 50 (0.5)								
										RUN: 45'-50'; R0EC: 87%; RQD: 14%
50.0 50		50 (0.5) 50 (0.25)		0	468	8			148	
55										

Remarks:
Latitude = 31.08633 Longitude = -97.70994

The ground water elevation was not determined during the course of this boring.

Driller: Texas Geobore **Logger: Bryanna** **Organization: Raba-Kistner Consultants, Inc.**

© 2026 Texas Department of Transportation

SOIL BORING LOGS

CHANGE ORDER	FED. RD. DIV. NO.	CONT	SECT	JOB	HIGHWAY
	6	0231	03	156	IH-14
	STATE	DIST	COUNTY		SHEET NO.
	TEXAS	WACO	BELL		78

c:\txdot\pwonline\txdot3\patrick.jalufka\d0785500\Soil Boring Logs.dgn 7/11/2025 4:37:08 PM
NODE

NOTES:

1. FOR CONTRACTOR INFORMATION ONLY.

DRILLING LOG

WinCore	County	Bell	Hole	059	District	Waco
Version 3.3	Highway	IH-14	Structure	Light Poles	Date	07/29/24
	CSJ	0231-03-155	Station		Grnd. Elev.	100.00 ft
			Offset		GW Elev.	N/A

Elev. (ft)	LOG	Texas Cone Penetrometer	Strata Description	Triaxial Test Lateral Press. (psi)	Triaxial Test Deviator Stress (psi)	Properties MC	Properties LL	Properties PI	Properties Wet Den. (pcf)	Additional Remarks
98.0			CLAY, stiff, dark brown, moist, with sand and limestone fragments (CL)			20	48	30		PP = 2.0 tsf; % Passing #200 = 71
			CLAY, stiff, moist, dark brown, sandy, with limestone fragments (CL)							
5		50 (2.5) 50 (2)								
90.0 10		50 (0.25) 50 (0.25)	LIMESTONE, tan, with clay seams, and fossil shells			21	25	10		% Passing #200 = 66
										RUN: 10'-15'; REC: 68%; RQD: 14%
85.0 15		50 (0.5) 50 (0.5)	LIMESTONE, gray, interbedded, with shale							
										RUN: 15'-20'; REC: 100%; RQD: 90%
20		50 (0.75) 50 (0.75)								
										RUN: 20'-25'; REC: 92%; RQD: 78%
25		50 (0.5) 50 (0.5)		0	1149	4			139	
										RUN: 25'-30'; REC: 96%; RQD: 28%
30		50 (0.5) 50 (0.25)		0	968	6			145	
				0	805	8			146	RUN: 30'-35'; REC: 83%; RQD: 38%
35		50 (0.5) 50 (0.25)								
										RUN: 35'-40'; REC: 85%; RQD: 57%
40		50 (0.5) 50 (0.5)								
										RUN: 40'-45'; REC: 90%; RQD: 38%
45		50 (0.5) 50 (0)		0	4712	1			160	
										RUN: 45'-50'; REC: 58%; RQD: 31%
50.0 50		50 (0.5) 50 (0.5)								
55										

Remarks:
Latitude = 31.08544 Longitude = -97.70814

The ground water elevation was not determined during the course of this boring.

Driller: Texas Geobore **Logger: Bryanna** **Organization: Raba-Kistner Consultants, Inc.**

DRILLING LOG

WinCore	County	Bell	Hole	060	District	Waco
Version 3.3	Highway	IH-14	Structure	Light Poles	Date	07/18/24
	CSJ	0231-03-155	Station		Grnd. Elev.	100.00 ft
			Offset		GW Elev.	85.00 ft

Elev. (ft)	LOG	Texas Cone Penetrometer	Strata Description	Triaxial Test Lateral Press. (psi)	Triaxial Test Deviator Stress (psi)	Properties MC	Properties LL	Properties PI	Properties Wet Den. (pcf)	Additional Remarks
			CLAY, soft to stiff, brown, with limestone fragments (CH)			68		43		PP = 2.0 tsf; % Passing #200 = 88
5		5 (6) 5 (6)		0	42	15			131	PP = 4.5+ tsf
90.0 10		9 (6) 13 (6)	CLAY, very hard, moist, brown to tan, sandy (CL)			66		46		PP = 2.5 tsf; % Passing #200 = 95
15		5 (6) 12 (6)				43		26		PP = 1.5 tsf; % Passing #200 = 55
										% Passing #200 = 70
80.0 20		50 (0.5) 50 (0.25)				29		15		
			LIMESTONE, gray, interbedded with shale							
25		50 (0.75) 50 (0.25)								
				0	446	9			148	
										RUN: 25'-30'; REC: 83%; RQD: 45%
30		50 (0.5) 50 (0.25)		0	1410	10			143	
										RUN: 30'-35'; REC: 95%; RQD: 35%
65.0 35		50 (0.5) 50 (0.25)	SHALE, gray, interbedded with limestone							
				0	110	17			141	RUN: 35'-40'; REC: 83%; RQD: 65%
40		50 (0.5) 50 (0.25)								
										RUN: 40'-45'; REC: 95%; RQD: 53%
45		50 (1.75) 50 (1.25)		0	59	23			130	
										RUN: 45'-50'; REC: 85%; RQD: 33%
50.0 50		50 (0.5) 50 (0.25)								
55										

Remarks:
Latitude = 31.08456 Longitude = -97.70634

Any ground water elevation information provided on this boring log is representative of conditions existing on the day and for the specific location where this information was collected. The actual groundwater elevation may fluctuate due to time, climatic conditions, and/or construction activity.

Driller: Rubicon **Logger: Omar Jimenez** **Organization: Raba-Kistner Consultants, Inc.**

© 2026 Texas Department of Transportation

SOIL BORING LOGS

SHEET 9 OF 13

CHANGE ORDER	FED. RD. DIV. NO.	CONT	SECT	JOB	HIGHWAY
	6	0231	03	156	IH-14
	STATE	DIST	COUNTY		SHEET NO.
	TEXAS	WACO	BELL		79

c:\txdot\pw*online*txdot3\patrick.jalufka\d0785500\Soil Boring Logs.dgn 7/11/2025 4:37:09 PM
NODE

NOTES:

1. FOR CONTRACTOR INFORMATION ONLY.

DRILLING LOG

WinCore
Version 3.3

County	Bell	Hole	061	District	Waco
Highway	IH-14	Structure	Light Poles	Date	06/19/24
CSJ	0231-03-155	Station		Grnd. Elev.	100.00 ft
		Offset		GW Elev.	N/A

Elev. (ft)	LOG	Texas Cone Penetrometer	Strata Description	Triaxial Test Lateral Press. (psi)	Triaxial Test Deviator Stress (psi)	Properties MC	Properties LL	Properties PI	Properties Wet Den. (pcf)	Additional Remarks
98.0			SAND, very stiff, brown, moist, clayey (SC)			24	40	25		PP = 2.0 tsf; % Passing #200 = 32
	5	25 (6) 26 (6)	CLAY, stiff to very stiff, brown to tan, dry, sandy, with limestone fragments (CL)			11	27	13		PP = 4.0 tsf; % Passing #200 = 87
	10	16 (6) 23 (6)				13	38	23		PP = 4.5+ tsf; % Passing #200 = 68
87.0			LIMESTONE, tan, weathered, with clay seams							
	15	50 (2) 50 (0.5)								
				0	928	6			139	RUN: 15'-20'; REC: 92%; RQD: 70%
80.0	20	50 (1.5) 50 (2)	LIMESTONE, gray							
										RUN: 20'-25'; REC: 95%; RQD: 51%
				0	154	3			133	RUN: 45'-50'; REC: 93%; RQD: 72%
	25	50 (0) 50 (0)								
										RUN: 25'-30'; REC: 95%; RQD: 72%
	30	50 (0) 50 (0)								
										RUN: 30'-35'; REC: 95%; RQD: 57%
	35	50 (1) 50 (0.5)		0	1374	3			136	
				0	1331	5			152	RUN: 35'-40'; REC: 80%; RQD: 46%
	40	50 (0) 50 (0.25)								
										RUN: 40'-45'; REC: 67%; RQD: 30%
	45	50 (3) 50 (0)		0	1456	6			143	
50.0	50	50 (1) 50 (0)								
	55									

Remarks:
Latitude = 31.08367 Longitude = -97.70454

The ground water elevation was not determined during the course of this boring.

Driller: ETTL Logger: Bryanna Organization: Raba-Kistner Consultants, Inc.

DRILLING LOG

WinCore
Version 3.3

County	Bell	Hole	062	District	Waco
Highway	IH-14	Structure	Light Poles	Date	07/29/24
CSJ	0231-03-155	Station		Grnd. Elev.	100.00 ft
		Offset		GW Elev.	N/A

Elev. (ft)	LOG	Texas Cone Penetrometer	Strata Description	Triaxial Test Lateral Press. (psi)	Triaxial Test Deviator Stress (psi)	Properties MC	Properties LL	Properties PI	Properties Wet Den. (pcf)	Additional Remarks
			CLAY, hard, tan to light brown, dry to moist, with marl and limestone fragments (CH)			15	57	40		% Passing #200 = 95
95.0	5	50 (4) 50 (4.5)								
			CLAY, hard, tan, dry to moist, with sand and limestone fragments (CL)			12	43	27		
90.0	10	18 (6) 19 (6)				36	49	33		% Passing #200 = 81
			CLAY, hard, tan, moist, with sand and limestone fragments (CH)							
	15	50 (1.5) 50 (3)				64	60	40		% Passing #200 = 89
80.0	20	50 (0.75) 50 (0.5)				45	57	38		% Passing #200 = 85
			LIMESTONE, fossiliferous, gray							
										RUN: 20'-25'; REC: 88%; RQD: 57%
	25	50 (0.5) 50 (0.25)		0	352	3			137	
										RUN: 25'-30'; REC: 52%; RQD: 0%
70.0	30	50 (0.5) 50 (0.5)		0	582	11			139	
			LIMESTONE, light gray, interbedded with shale							
										RUN: 30'-35'; REC: 92%; RQD: 53%
	35	50 (1) 50 (1)								
				0	700	7			145	RUN: 35'-40'; REC: 93%; RQD: 66%
	40	50 (0.5) 50 (0.5)								
										RUN: 40'-45'; REC: 91%; RQD: 67%
	45	50 (0.25) 50 (0.25)		0	2315	5			141	
										RUN: 45'-50'; REC: 93%; RQD: 29%
50.0	50	50 (0.5) 50 (0.25)								
	55									

Remarks:
Latitude = 31.0828 Longitude = -97.70272

The ground water elevation was not determined during the course of this boring.

Driller: Texas Geobore Logger: Bryanna Organization: Raba-Kistner Consultants, Inc.

© 2026 Texas Department of Transportation

SOIL BORING LOGS

SHEET 10 OF 13

CHANGE ORDER	FED. RD. DIV. NO.	CONT	SECT	JOB	HIGHWAY
	6	0231	03	156	IH-14
	STATE	DIST	COUNTY		SHEET NO.
	TEXAS	WACO	BELL		80

c:\txdot\pw*online\txdot3\patrick.jalufka\d0785500\Soil Boring Logs.dgn 7/11/2025 4:37:10 PM
NODE

DRILLING LOG

WinCore Version 3.3	County	Bell	Hole	063	District	Waco
	Highway	IH-14	Structure	Light Poles	Date	04/16/24
	CSJ	0231-03-155	Station		Grnd. Elev.	100.00 ft
			Offset		GW Elev.	N/A

Elev. (ft)	LOG	Texas Cone Penetrometer	Strata Description	Triaxial Test Lateral Press. (psi)	Triaxial Test Deviator Stress (psi)	Properties MC	Properties LL	Properties PI	Properties Wet Den. (pcf)	Additional Remarks
98.0			SAND, dense, dry to moist, tan, clayey (SC)				33	15		PP = 4.5+ tsf; % Passing #200 = 42
		50 (3) 50 (3.5)	CLAY, hard, dry, tan to reddish tan, sandy, with fossil shells, limestone gravel and interbedded shaley clay seams from 6 feet to 8 feet (CL)			9	30	16		% Passing #200 = 59
		50 (2) 50 (3.25)				16				
86.0		50 (0.5) 50 (0.25)	LIMESTONE, gray, with fossil shells, interbedded clay and shale seams	0	653	7			141	
		50 (0.25) 50 (0.25)		0	878	8			133	RUN: 15'-20'; REC: 80%; RQD: 74%
		50 (0.5) 50 (0.25)								RUN: 20'-25'; REC: 100%; RQD: 88%
		50 (1.25) 50 (0.5)								RUN: 25'-30'; REC: 83%; RQD: 58%
69.0		50 (2.75) 50 (1.25)	SHALE, dark gray, with fossil shells and interbedded limestone lenses	0	260	18			134	RUN: 30'-35'; REC: 100%; RQD: 69%
62.5		50 (0.5) 50 (0.25)	LIMESTONE, dark gray, fossiliferous, with interbedded shale and clay seams	0	1351	9			145	RUN: 35'-40'; REC: 83%; RQD: 72%
		50 (0.5) 50 (0.25)								RUN: 40'-45'; REC: 90%; RQD: 73%
54.0		50 (0.25) 50 (0.25)	LIMESTONE, light gray, with fossil shells	0	1364	4			144	RUN: 45'-50'; REC: 67%; RQD: 27%
50.0										

Remarks:
Latitude = 31.08142 Longitude = -97.70125

The ground water elevation was not determined during the course of this boring.

Driller: Rubicon Logger: Bradley Coffman Organization: Raba-Kistner, Inc.

DRILLING LOG

WinCore Version 3.3	County	Bell	Hole	064	District	Waco
	Highway	IH-14	Structure	Light Poles	Date	07/18/24
	CSJ	0231-03-155	Station		Grnd. Elev.	100.00 ft
			Offset		GW Elev.	N/A

Elev. (ft)	LOG	Texas Cone Penetrometer	Strata Description	Triaxial Test Lateral Press. (psi)	Triaxial Test Deviator Stress (psi)	Properties MC	Properties LL	Properties PI	Properties Wet Den. (pcf)	Additional Remarks
98.0			CLAY, very hard, brown, with limestone fragments (CL)			20	43	27		
			LIMESTONE, tan, with clay seams							
		40 (6) 50 (0.75)								
		50 (3) 50 (3)								
		50 (0.5) 50 (0.25)								
		50 (5.5) 50 (4.75)								
		50 (0.5) 50 (0.25)								
73.0			SHALE, gray, interbedded with limestone	0	176	11			143	
		50 (2) 50 (0.25)								
70.0			LIMESTONE, gray, with trace fossils, interbedded with shale	0	79	20			131	RUN: 30'-35'; REC: 80%; RQD: 63%
		50 (1) 50 (0.5)		0	479	7			151	
		50 (0.75) 50 (0.25)		0	1655	9			147	RUN: 35'-40'; REC: 100%; RQD: 30%
		50 (0.5) 50 (0.25)								RUN: 40'-45'; REC: 100%; RQD: 67%
		50 (0.5) 50 (0.25)		0	1035	14			140	RUN: 45'-50'; REC: 97%; RQD: 30%
50.0										

Remarks:
Latitude = 31.08038 Longitude = -97.69935

The ground water elevation was not determined during the course of this boring.

Driller: Rubicon Logger: Omar Jimenez Organization: Raba-Kistner Consultants, Inc.

NOTES:

1. FOR CONTRACTOR INFORMATION ONLY.

© 2026 Texas Department of Transportation

SOIL BORING LOGS

SHEET 11 OF 13

CHANGE ORDER	FED. RD. DIV. NO.	CONT	SECT	JOB	HIGHWAY
	6	0231	03	156	IH-14
	STATE	DIST	COUNTY		SHEET NO.
	TEXAS	WACO	BELL		81

c:\txdot\pw*online\txdot3\patrick.jalufka\d0785500\Soil Boring Logs.dgn 7/11/2025 4:37:11 PM NODE

NOTES:

1. FOR CONTRACTOR INFORMATION ONLY.

DRILLING LOG

WinCore
Version 3.3

County	Bell	Hole	065	District	Waco
Highway	IH-14	Structure	Light Poles	Date	04/18/24
CSJ	0231-03-155	Station		Grnd. Elev.	100.00 ft
		Offset		GW Elev.	N/A

Elev. (ft)	LOG	Texas Cone Penetrometer	Strata Description	Triaxial Test Lateral Press. (psi)	Triaxial Test Deviator Stress (psi)	Properties MC	Properties LL	Properties PI	Properties Wet Den. (pcf)	Additional Remarks
			CLAY, moist, dark brown, sandy, with gravel (CL)							
95.0	5	7 (6) 6 (6)		0	43	14	39	21	132	PP = 4.5+ tsf; % Passing #200 = 67
			CLAY, soft, dry to moist, orange and tan, with fossil shells and limestone gravel (CH)							
90.0	10	9 (6) 12 (6)				34	84	57		PP = 2.0 tsf; % Passing #200 = 98
			CLAY, very stiff, dry to moist, gray to light gray, with gravel (CL)							
	15	30 (6) 50 (3.75)				10	34	20		PP = 4.5+ tsf; % Passing #200 = 86
82.0										
			LIMESTONE, tan to light brown, with fossil shells and interbedded shale							
	20	50 (2.75) 50 (1.75)								
	25	50 (0.5) 50 (0.25)				12				
71.0										
	30	43 (6) 50 (6)	SHALE, dark gray, weathered, with fossil shells							
	35	50 (0.5) 50 (0.25)				19				
	40	50 (6) 42 (6)								
	45	50 (4) 50 (1.5)				17				
52.5			SHALE, dark gray							
50.0	50	50 (0.5) 50 (0.25)								
	55									

Remarks:
Latitude = 31.07944 Longitude = -97.69756

The ground water elevation was not determined during the course of this boring.

Driller: Rubicon Logger: Bradley Coffman Organization: Raba-Kistner, Inc.

DRILLING LOG

WinCore
Version 3.3

County	Bell	Hole	066	District	Waco
Highway	IH-14	Structure	Light Poles	Date	03/25/24
CSJ	0231-03-155	Station		Grnd. Elev.	100.00 ft
		Offset		GW Elev.	N/A

Elev. (ft)	LOG	Texas Cone Penetrometer	Strata Description	Triaxial Test Lateral Press. (psi)	Triaxial Test Deviator Stress (psi)	Properties MC	Properties LL	Properties PI	Properties Wet Den. (pcf)	Additional Remarks
			SAND, very dense, moist, brown, clayey (SC)							
95.0	5	24 (6) 33 (6)				12	20	9		% Passing #200 = 44
			CLAY, very stiff to very hard, dry to moist, tan to light gray, with sand, limestone lenses and fossil shells at 18 feet (CL)							
	10	34 (6) 39 (6)				12	23	8		PP = 4.5+ tsf; % Passing #200 = 77
	15	50 (4) 50 (2.5)				9				
	20	50 (2) 50 (0.75)				11				
75.0	25	50 (1) 50 (0.25)								
			LIMESTONE, tan and gray, with interbedded clay seams, ferrous staining and fossil shells							RUN: 25'-30'; REC: 65%; RQD: 24%
	30	50 (0.75) 50 (0.25)								
68.0			LIMESTONE, gray and tan, with fossil shells and interbedded clay seams	0	349	3			133	RUN: 30'-35'; REC: 53%; RQD: 11%
	35	50 (1.25) 50 (0.25)								
63.0			LIMESTONE, dark gray, with fossil shells and interbedded clay seams							RUN: 35'-40'; REC: 62%; RQD: 23%
	40	50 (0.75) 50 (0.5)								
				0	128	17			141	RUN: 40'-45'; REC: 87%; RQD: 47%
	45	50 (1.5) 50 (1.25)								
				0	628	12			135	RUN: 45'-50'; REC: 78%; RQD: 48%
50.0	50	50 (0.5) 50 (0.25)								
	55									

Remarks:
Latitude = 31.07914 Longitude = -97.69532

The ground water elevation was not determined during the course of this boring.

Driller: Rubicon Logger: Bradley Coffman Organization: Raba-Kistner, Inc.

© 2026 Texas Department of Transportation

SOIL BORING LOGS

SHEET 12 OF 13

CHANGE ORDER	FED. RD. DIV. NO.	CONT	SECT	JOB	HIGHWAY
	6	0231	03	156	IH-14
	STATE	DIST	COUNTY		SHEET NO.
	TEXAS	WACO	BELL		82

c:\txdot\pw*online*\txdot3\patrick.jalufka\d0785500\Soil Boring Logs.dgn 7/11/2025 4:37:12 PM
NODE

DRILLING LOG

WinCore
Version 3.3

County	Bell	Hole	067	District	Waco
Highway	IH-14	Structure	Light Poles	Date	04/16/24
CSJ	0231-03-155	Station		Grnd. Elev.	100.00 ft
		Offset		GW Elev.	56.00 ft

Elev. (ft)	LOG	Texas Cone Penetrometer	Strata Description	Triaxial Test Lateral Press. (psi)	Triaxial Test Deviator Stress (psi)	Properties MC	Properties LL	Properties PI	Properties Wet Den. (pcf)	Additional Remarks
			CLAY, very stiff to very hard, moist, brown to tan, sandy, with gravel, fossil shells and calcareous nodules (CL)							
	5	38 (6) 22 (6)				14				
	10	47 (6) 50 (5.25)				12				
	15	50 (2.25) 50 (1.75)				9	28	14		% Passing #200 = 60
80.0	20	50 (1.5) 50 (0.25)								
			LIMESTONE, tan, weathered, with fossil shells and interbedded shaley clay seams							
	25	50 (1.75) 50 (0.75)								
72.5			LIMESTONE, dark gray							
	30	50 (4.25) 50 (1.75)								
	35	50 (6) 42 (6)				14				
	40	50 (5.5) 47 (6)								
	45	50 (0.5) 50 (0.25)								
50.0	50	50 (0.75) 50 (0.25)								
	55									

Remarks:
Latitude = 31.07778 Longitude = -97.6939

Any ground water elevation information provided on this boring log is representative of conditions existing on the day and for the specific location where this information was collected. The actual groundwater elevation may fluctuate due to time, climatic conditions, and/or construction activity.

Driller: Rubicon **Logger: Bradley Coffman** **Organization: Raba-Kistner, Inc.**

B-41

NOTES:

1. FOR CONTRACTOR INFORMATION ONLY.

© 2026 Texas Department of Transportation

SOIL BORING LOGS

SHEET 13 OF 13

CHANGE ORDER	FED. RD. DIV. NO.	CONT	SECT	JOB	HIGHWAY
	6	0231	03	156	IH-14
	STATE	DIST	COUNTY		SHEET NO.
	TEXAS	WACO	BELL		83

c:\txdot\pw*online\txdot3\patrick.jalufka\d0785500\Soil Boring Logs.dgn 7/11/2025 4:37:12 PM NODE

c:\txdot\pw*online*txdot3\patrick.jalufka\d0785500\illumination General Notes.dgn 7/11/2025 4:37:28 PM
NODE

ILLUMINATION GENERAL NOTES

1. EXISTING FIBER OPTICS, STORM SEWER, TELEPHONE, GAS, ITS, AND ELECTRICAL SYSTEMS WITHIN PROJECT AREA MAY NOT BE IN EXACT LOCATION AS SHOWN OR NOT SHOWN ON PLANS OR OTHER PLANS. BEFORE DIGGING, DRILLING OR BORING IN THE PROJECT AREA, THE CONTRACTOR SHALL PERFORM A "ONE CALL" AND NOTIFY THE UTILITY COMPANIES 72 HOURS PRIOR TO CONSTRUCTION.

2. INSTALLATION OF HIGH MAST POLES REQUIRES COORDINATION WITH THE FEDERAL AVIATION ADMINISTRATION. THE CONTRACTOR IS RESPONSIBLE FOR RECORDING THE LATITUDE, LONGITUDE, AND ELEVATION OF EACH FINALIZED POLE LOCATION AND PROVIDE TO THE ENGINEER. THIS WORK WILL NOT BE PAID FOR DIRECTLY AND WILL BE CONSIDERED SUBSIDIARY TO THE VARIOUS BID ITEMS. PROVIDE DATA AND NOTIFY THE ENGINEER NO LATER THAN 3 CALENDAR DAYS AFTER A POLE IS ERECTED. THIS WILL BE DONE FOR EACH HIGH MAST LOCATION.

3. ALL HIGH MAST ILLUMINATION POLES WILL HAVE AVIATION WARNING LIGHTS INSTALLED. THIS IS SUBSIDIARY TO SPECIAL SPECIFICATION 6083.

4. THIS PROJECT INCLUDES TWO TYPES OF ILLUMINATION - CONTINUOUS ILLUMINATION TO BE MAINTAINED BY THE CITY OF KILLEEN USING HIGH MAST POLES, AND SAFETY LIGHTING TO BE MAINTAINED BY TXDOT USING ROADWAY ILLUMINATION POLES AND UNDERPASS LIGHTING FIXTURES. THESE TWO TYPES OF LIGHTING ARE TO BE POWERED USING SEPARATE SERVICES. SAFETY LIGHTING AND CONTINUOUS LIGHTING ARE NOT ALLOWED TO SHARE THE SAME CONDUIT. THEY ARE ALLOWED TO USE THE SAME TRENCH AND GROUND BOX.

5. ALL ELECTRICAL CONDUCTOR SPLICES INVOLVING ALUMINUM MUST BE PERFORMED BY A MASTER ELECTRICIAN.

6. ALL NEW GROUND BOXES WILL BE TYPE D WITH APRON. NEW GROUND BOXES WILL BE SECURED USING A METHOD APPROVED BY THE ENGINEER. NEW GROUND BOXES WILL BE PAID FOR USING ITEM 624 7014 (INSTL GROUND BOX W/SECURE LID).

7. WHERE CALLED OUT, EXISTING GROUND BOXES THAT ARE TO REMAIN WILL HAVE THEIR LIDS REPLACED WITH ONES THAT ARE LOCKABLE. THIS WILL BE PAID FOR USING ITEM 624 7015 (RETRO GROUND BOX W/SECURE LID).

8. SERVICE, GROUND BOX, CONDUIT, ILLUMINATION POLES, AND HIGH MAST LOCATIONS ARE APPROXIMATE AND MAY BE ADJUSTED MARGINALLY TO BETTER FIT FIELD CONDITIONS. HIGH MAST POLES SHOULD NOT BE ADJUSTED TO BE WITHIN THE CLEAR ZONE IF THEY ARE NOT PROTECTED. HIGH MAST LOCATIONS ARE TO BE APROVED BY THE ENGINEER BEFORE CONSTRUCTION.

9. WHEN APPLICABLE, LOCATE NEW SERVICES AS CLOSE AS PRACTICAL TO ORIGINAL SERICE TO PRESERVE EXISTING SERVICE ADDRESS AND ESID NUMBER.

10. WHEN AN EXISTING CIRCUIT CHANGES IDENTIFIERS (A,B,C, ETC.) GOING FROM EXISTING LAYOUT TO PROPOSED, REPLACE ALL CIRCUIT IDENTIFIER TAGS THAT WERE AFFECTED AND ARE ACCESSIBLE.

11. REPLACE FUSES AND BREAKAWAY FUSE HOLDERS IN EXISTING ILLUMINATION POLES THAT ARE LABELED AND ARE TO REMAIN. THIS IS FOR ANTICIPATED BREAKAGE WHEN REMOVING EXISTING CONDUCTORS.

12. SOME ROADWAY ILLUMINATION POLES HAVE DIFFERENT DESIGNATIONS FROM EXISTING TO PROPOSED DUE TO CHANGING CIRCUITS AND/OR SERVICES.

13. ABANDONED CONDUIT NOT SHOWN ON ILLUMINATION LAYOUT FOR CLARITY.

LEGEND OF UTILITY TYPES

COMMUNICATIONS	
BRIGHTSPEED (TELE)	QL "B" — - — T1 — - —
MILLENIUM TELECOM (TELE)	— - — T2 — - —
BRIGHTSPEED (FOC)	— - — FOC1 — - —
UNITE PRIVATE NETWORKS (FOC)	— - — FOC2 — - —
FIBERLIGHT (FOC)	— - — FOC3 — - —
WINDSTREAM (FOC)	— - — FOC4 — - —
LUMEN (FOC)	— - — FOC5 — - —
TRANSTELCO (FOC)	— - — FOC6 — - —
SPECTRUM (OVH FOC)	QL "C" — - — (OFOC1) — - —
AT&T (FOC)	QL "D" — - — (FOC1) — - —
SUDDENLINK (OVH)	— - — (FOC2) — - —
GAS	
ATMOS	QL "B" — - - — G1 — - - —
WATER	
CITY OF KILLEEN	QL "D" — · — (W1) — · —
WASTEWATER	
CITY OF KILLEEN	QL "D" — — (WW1) — —
ELECTRIC	
ONCOR	QL "C" - — — (OE1) — — -

INTERIM REVIEW

THIS DOCUMENT IS RELEASED FOR THE PURPOSE OF INTERIM REVIEW UNDER THE AUTHORITY OF

PATRICK JALUFKA P.E., ON: 7/8/2025

IT IS NOT TO BE USED FOR CONSTRUCTION

PRELIMINARY NOT FOR CONSTRUCTION

© 2026 Texas Department of Transportation

ILLUMINATION GENERAL NOTES & UTILITY LEGEND

SHEET 1 OF 1

CHANGE ORDER	FED. RD. DIV. NO.	CONT	SECT	JOB	HIGHWAY
	6	0231	03	156	IH-14
	STATE	DIST	COUNTY		SHEET NO.
	TEXAS	WACO	BELL		84

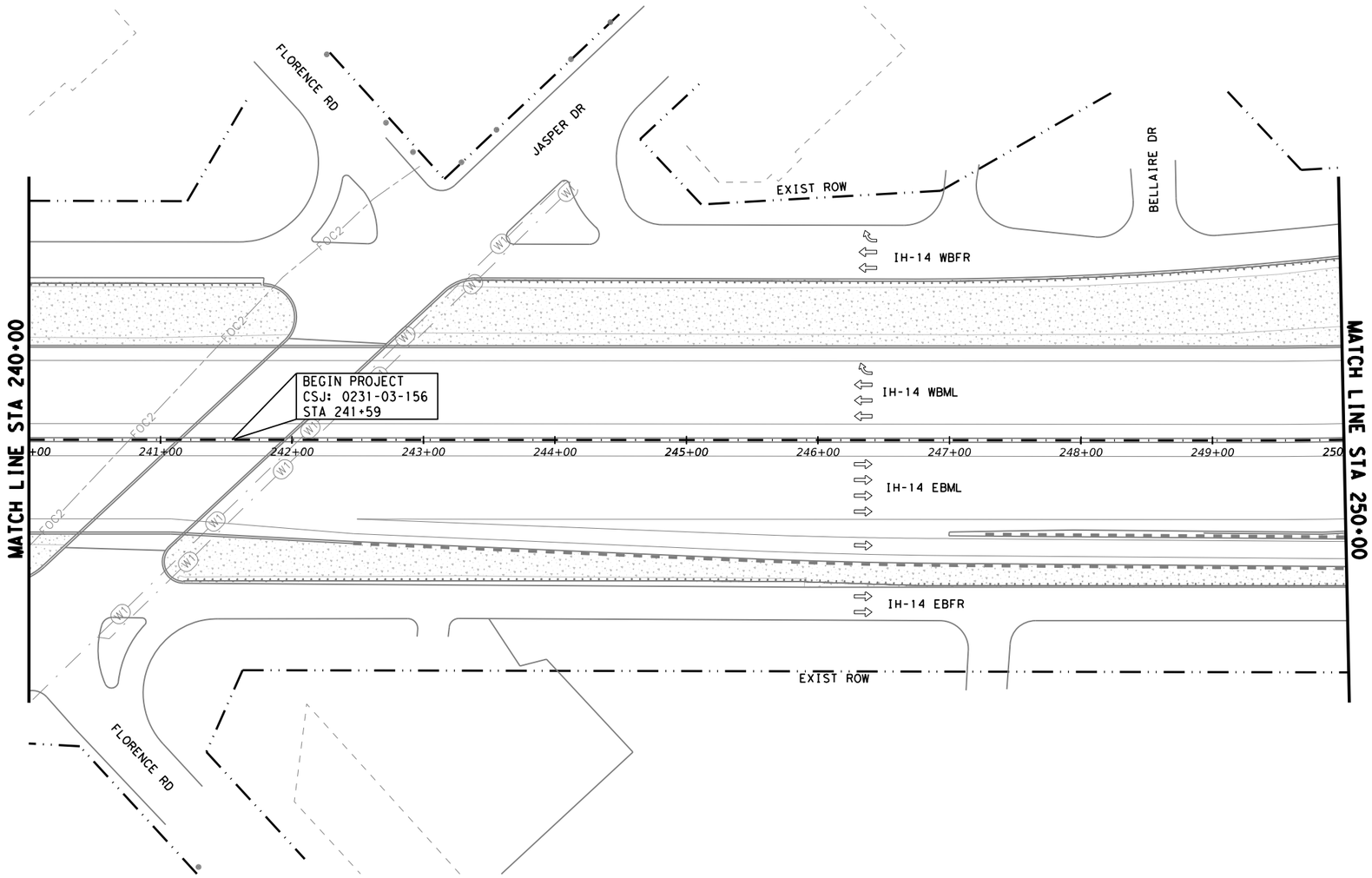

LEGEND

- EXIST GROUND BOX (TY A)
- PROP GROUND BOX (TY D W/ APRON)
- EXIST CONDUIT (TRENCHED)
- EXIST CONDUIT (BORED)
- PROP CONDUIT (TRENCHED)
- EXIST CONDUIT (BORED)
- RDWY ILLUM ASSEM (TRANS)
- RDWY ILLUM ASSEM (SHOE/BRIDGE)
- PROP HIGH MAST ILLUM POLE W/ GB
- EXIST RDWY ILLUM ASSEM (TRANS)
- EXIST/PROP ELEC SERVICE
- (1) RETROFIT GROUND BOX LID
- (2) GROUND BOX (PREPARE)

POLE DESIGNATION

HM-S#-A#
- POLE #
- CIRCUIT #
- SERVICE #

CONDUIT DESIGNATION

ES#-##
- RUN #
- SERVICE #
- E - EXIST CONDUIT
- P - PROP CONDUIT

CONDUIT AND CONDUCTOR RUNS

RUN NAME	SERVICE	CIRCUITS	RUN LENGTH	CONDUIT			EQUIPMENT GROUNDING CONDUCTOR	ELECTRICAL CONDUCTOR
				0618	0618	0618	6071	6071
				7036	7061	7090	6003	6003
				CONDT (PVC) (SCH 40) (3")	CONDT (PVC) (SCH 80) (3") (BORE)	CONDUIT (PREPARE)	ALUMINUM ELECTRICAL COND (#6 XHHW)	ALUMINUM ELECTRICAL COND (#6 XHHW)
				LF	LF	LF	LF	LF
NO WORK THIS SHEET								

INTERIM REVIEW

THIS DOCUMENT IS RELEASED FOR THE PURPOSE OF INTERIM REVIEW UNDER THE AUTHORITY OF

PATRICK JALUFKA P.E., ON: 7/11/2025

IT IS NOT TO BE USED FOR CONSTRUCTION

PRELIMINARY NOT FOR CONSTRUCTION

© 2026 Texas Department of Transportation

ILLUMINATION LAYOUT

SCALE: 1" = 100' HORIZ. (0 25 50 100 FEET)

SHEET 1 OF 20

CHANGE ORDER	FED. RD. DIV. NO.	CONT	SECT	JOB	HIGHWAY
	6	0231	03	156	IH-14
	STATE	DIST	COUNTY		SHEET NO.
	TEXAS	WACO	BELL		85

c:\txdot\pw*online\txdot3\patrick.jalufka\d0785500\Illumination Layout (WAC) V2.dgn 7/11/2025 4:37:47 PM
NODE

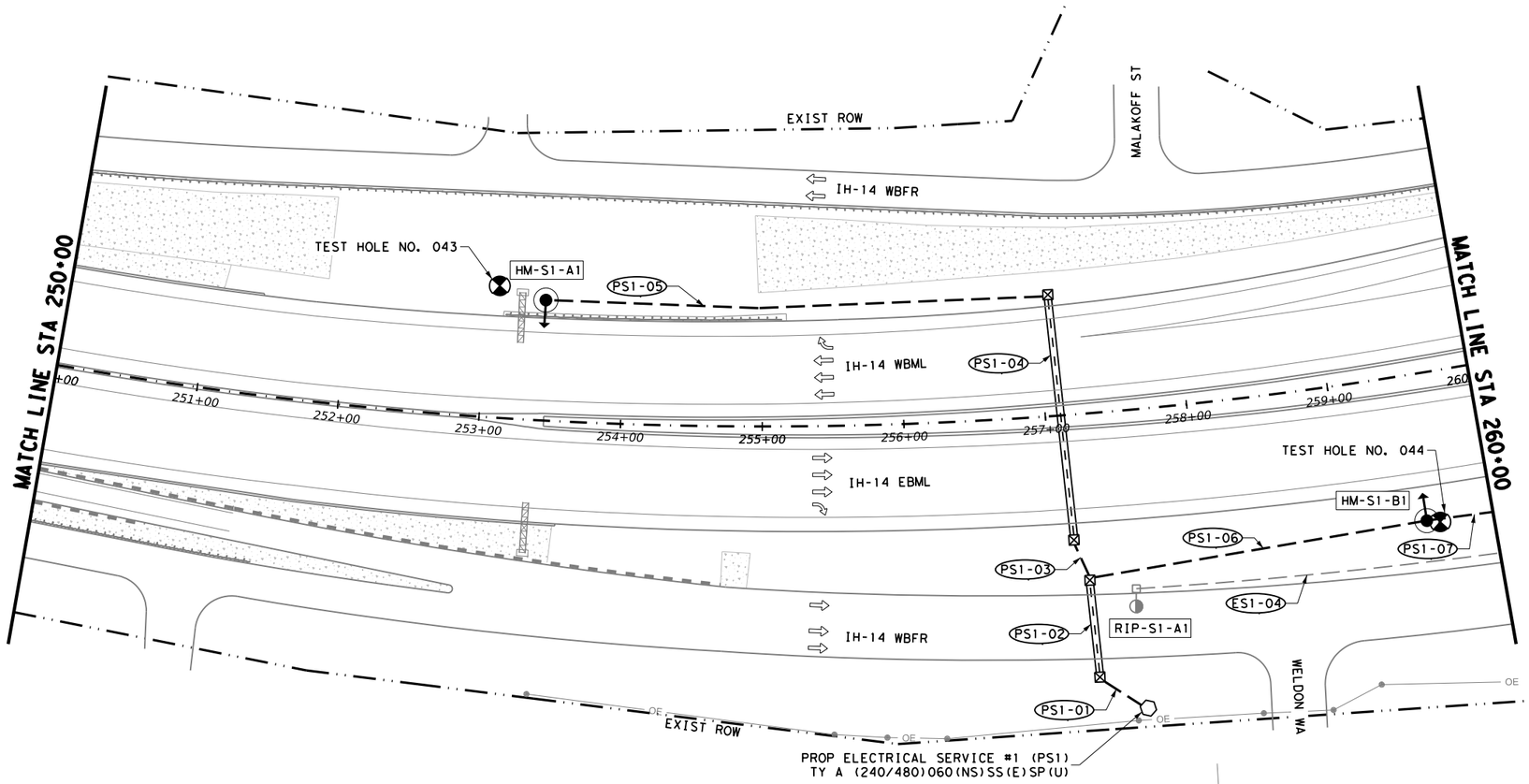

LEGEND

- EXIST GROUND BOX (TY A)
- PROP GROUND BOX (TY D W/ APRON)
- EXIST CONDUIT (TRENCHED)
- EXIST CONDUIT (BORED)
- PROP CONDUIT (TRENCHED)
- EXIST CONDUIT (BORED)
- RDWY ILLUM ASSEM (TRANS)
- RDWY ILLUM ASSEM (SHOE/BRIDGE)
- PROP HIGH MAST ILLUM POLE W/ GB
- EXIST RDWY ILLUM ASSEM (TRANS)
- EXIST/PROP ELEC SERVICE
- (1) RETROFIT GROUND BOX LID
- (2) GROUND BOX (PREPARE)

POLE DESIGNATION

HM-S#-A#
- POLE #
- CIRCUIT #
- SERVICE #

CONDUIT DESIGNATION

ES#-##
- RUN #
- SERVICE #
- E - EXIST CONDUIT
- P - PROP CONDUIT

CONDUIT AND CONDUCTOR RUNS

RUN NAME	SERVICE	CIRCUITS	RUN LENGTH	CONDUIT			EQUIPMENT GROUNDING CONDUCTOR	ELECTRICAL CONDUCTOR
				0618	0618	0618	6071	6071
				7036	7061	7090	6003	6003
				CONDT (PVC) (SCH 40) (3")	CONDT (PVC) (SCH 80) (3") (BORE)	CONDUIT (PREPARE)	ALUMINUM ELECTRICAL COND (#6 XHHW)	ALUMINUM ELECTRICAL COND (#6 XHHW)
				LF	LF	LF	LF	LF
PS1-01	PS1	ABC	41	41			41	246
PS1-02	PS1	ABC	69		69		69	414
PS1-03	PS1	A	30	30			30	60
PS1-04	PS1	A	174		174		174	348
PS1-05	PS1	A	355	355			355	710
PS1-06	PS1	BC	241	241			241	964
PS1-07	PS1	BC	47	47			47	188
ES1-04	ES1	A	259	NO WORK				
		SHEET TOTAL:		714	243		957	2930

SUMMARY OF ILLUMINATION ITEMS

BID CODE		DESCRIPTION	UNIT	QTY
416	7035	DRILL SHAFT (HIGH MAST POLE) (48 IN)	LF	30
432	7001	RIPRAP (CONC)(4 IN)	CY	4.66
618	7036	CONDT (PVC) (SCH 40) (3")	LF	714
618	7061	CONDT (PVC) (SCH 80) (3") (BORE)	LF	243
624	7014	INSTL GROUND BOX (W/SECURE LID)	EA	6
628	7049	ELC SRV TY A 240/480 060(NS)SS(E)SP(U)	EA	1
6071	7003	ALUMINUM ELECTRICAL COND (#6 XHHW)	LF	3887
6083	7002	LED HI MST(100 FT)(80MPH)(6FIXT)(TY B)(SHLD)	EA	2

ILLUMINATION ASSEMBLY SUMMARY

POLE	LOCATION		ASSEMBLY TYPE	FOUNDATION DIAMETER (IN)	FOUNDATION LENGTH (FT) *
	STATION	OFFSET (FT)			
HM-S1-A1	253+05	94 LT	(100 FT)(80MPH)(6FIXT)(TY B)(SHLD)	48	15
HM-S1-B1	259+55	104 RT	(100 FT)(80MPH)(6FIXT)(TY B)(SHLD)	48	15

* INCLUDES 3 FEET EXPOSURE

INTERIM REVIEW

THIS DOCUMENT IS RELEASED FOR THE PURPOSE OF INTERIM REVIEW UNDER THE AUTHORITY OF

PATRICK JALUFKA P.E., ON: 7/8/2025

IT IS NOT TO BE USED FOR CONSTRUCTION

PRELIMINARY NOT FOR CONSTRUCTION

© 2026 Texas Department of Transportation

ILLUMINATION LAYOUT

SCALE: 0 25 50 100 FEET
1" = 100' HORIZ.

SHEET 2 OF 20

CHANGE ORDER	FED. RD. DIV. NO.	CONT	SECT	JOB	HIGHWAY
	6	0231	03	156	IH-14
	STATE	DIST	COUNTY		SHEET NO.
	TEXAS	WACO	BELL		86

c:\txdot\pw*online\txdot3\patrick.jalufka\d0785500\illumination Layout (WAC) V2.dgn 7/11/2025 4:37:49 PM
NODE

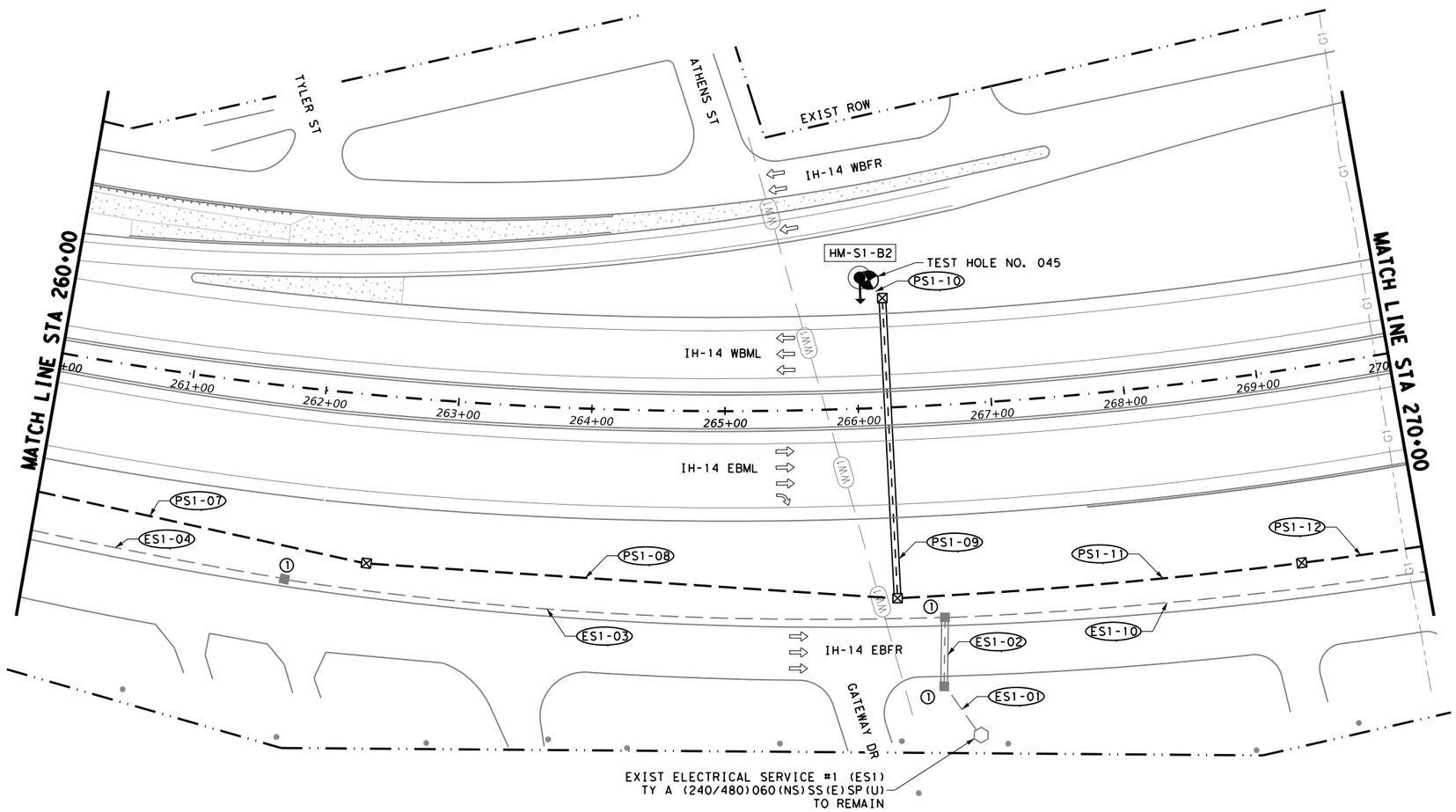

LEGEND

- EXIST GROUND BOX (TY A)
- PROP GROUND BOX (TY D W/ APRON)
- EXIST CONDUIT (TRENCHED)
- EXIST CONDUIT (BORED)
- PROP CONDUIT (TRENCHED)
- EXIST CONDUIT (BORED)
- RDWY ILLUM ASSEM (TRANS)
- RDWY ILLUM ASSEM (SHOE/BRIDGE)
- PROP HIGH MAST ILLUM POLE W/ GB
- EXIST RDWY ILLUM ASSEM (TRANS)
- EXIST/PROP ELEC SERVICE
- (1) RETROFIT GROUND BOX LID
- (2) GROUND BOX (PREPARE)

POLE DESIGNATION

HM-S#-A#
- POLE #
- CIRCUIT #
- SERVICE #

CONDUIT DESIGNATION

ES#-##
- RUN #
- SERVICE #
- E - EXIST CONDUIT
- P - PROP CONDUIT

N

CONDUIT AND CONDUCTOR RUNS

RUN NAME	SERVICE	CIRCUITS	RUN LENGTH	CONDUIT			EQUIPMENT GROUNDING CONDUCTOR	ELECTRICAL CONDUCTOR
				0618	0618	0618	6071	6071
				7036	7061	7090	6003	6003
				CONDT (PVC) (SCH 40) (3")	CONDT (PVC) (SCH 80)	CONDUIT (PREPARE)	ALUMINUM ELECTRICAL COND (#6 XHHW)	ALUMINUM ELECTRICAL COND (#6 XHHW)
				LF	LF	LF	LF	LF
PS1-07	PS1	BC	252	252			252	1008
PS1-08	PS1	BC	400	400			400	1600
PS1-09	PS1	B	225		225		225	450
PS1-10	PS1	B	24	24			24	48
PS1-11	PS1	C	305	305			305	610
PS1-12	PS1	C	91	91			91	182
ES1-01	ES1	ABC	46	NO WORK				
ES1-02	ES1	ABC	52	NO WORK				
ES1-03	ES1	A	498	NO WORK				
ES1-04	ES1	A	194	NO WORK				
ES1-10	ES1	BC	365	SPLICE EXISTING TO PROPOSED				
SHEET TOTAL:				1072	225		1297	3898

SUMMARY OF ILLUMINATION ITEMS

BID CODE		DESCRIPTION	UNIT	QTY
416	7035	DRILL SHAFT (HIGH MAST POLE) (48 IN)	LF	18
432	7001	RIPRAP (CONC)(4 IN)	CY	2.33
618	7036	CONDT (PVC) (SCH 40) (3")	LF	1072
618	7061	CONDT (PVC) (SCH 80) (3") (BORE)	LF	225
624	7014	INSTL GROUND BOX (W/SECURE LID)	EA	5
624	7015	RETRO GROUND BOX (W/SECURE LID)	EA	3
6071	7003	ALUMINUM ELECTRICAL COND (#6 XHHW)	LF	5195
6083	7002	LED HI MST(100 FT)(80MPH)(6FIXT)(TY B)(SHLD)	EA	1

ILLUMINATION ASSEMBLY SUMMARY

POLE	LOCATION		ASSEMBLY TYPE	FOUNDATION DIAMETER	FOUNDATION LENGTH (FT) *
	STATION	OFFSET (FT)			
HM-S1-B2	266+05	98 LT	(100 FT)(80MPH)(6FIXT)(TY B)(SHLD)	48	18

* INCLUDES 3 FEET EXPOSURE

INTERIM REVIEW

THIS DOCUMENT IS RELEASED FOR THE PURPOSE OF INTERIM REVIEW UNDER THE AUTHORITY OF

PATRICK JALUFKA P.E., ON: 7/8/2025

IT IS NOT TO BE USED FOR CONSTRUCTION

PRELIMINARY NOT FOR CONSTRUCTION

© 2026 Texas Department of Transportation

ILLUMINATION LAYOUT

SCALE: 1" = 100' HORIZ. (0 25 50 100 FEET)

SHEET 3 OF 20

CHANGE ORDER	FED. RD. DIV. NO.	CONT	SECT	JOB	HIGHWAY
	6	0231	03	156	IH-14
	STATE	DIST	COUNTY		SHEET NO.
	TEXAS	WACO	BELL		87

c:\txdot\pwonline\txdot3\patrick.jalufka\d0785500\illumination Layout (WAC) V2.dgn 7/11/2025 4:37:51 PM
NODE

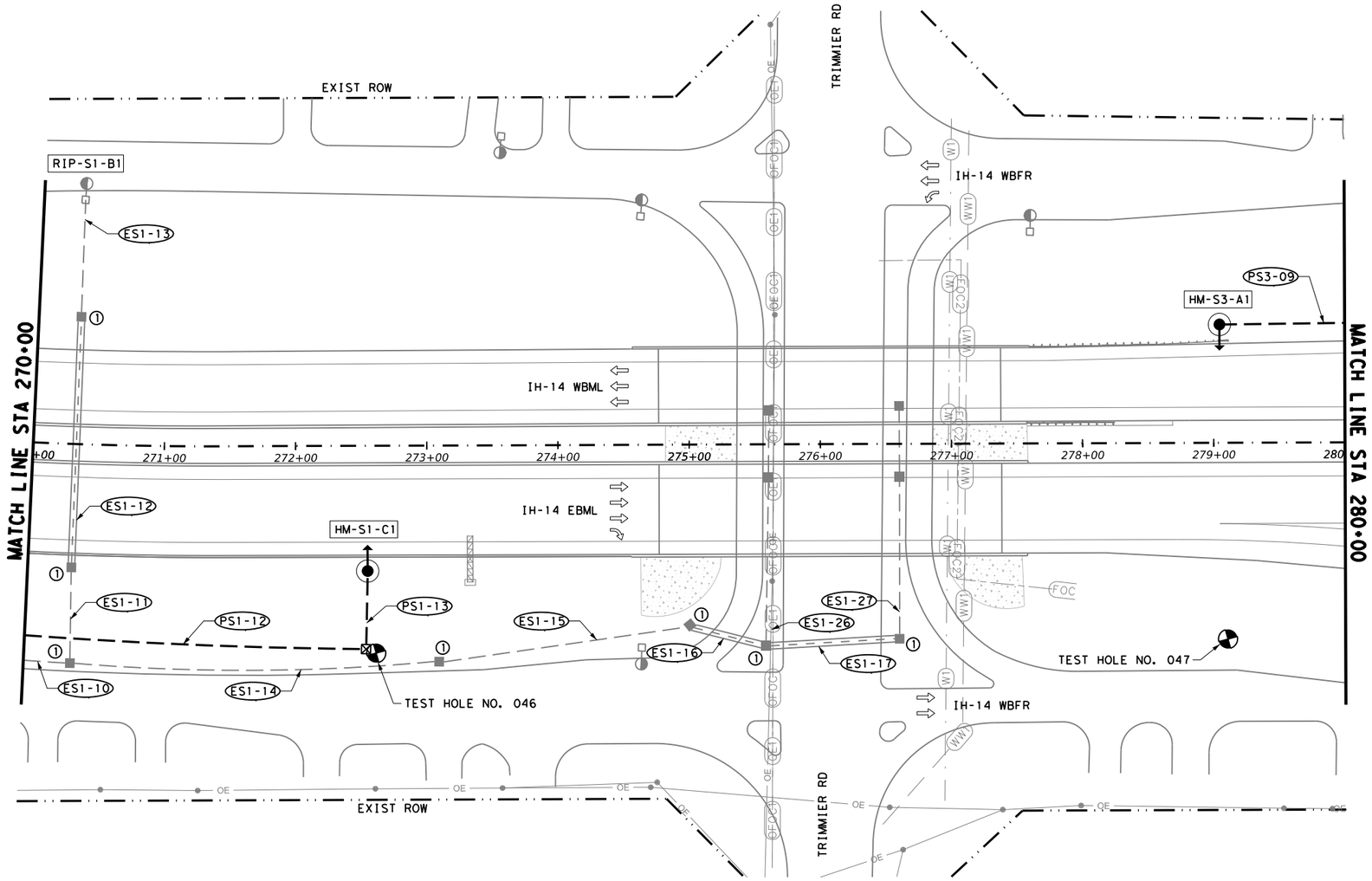

LEGEND

- EXIST GROUND BOX (TY A)
- PROP GROUND BOX (TY D W/ APRON)
- EXIST CONDUIT (TRENCHED)
- EXIST CONDUIT (BORED)
- PROP CONDUIT (TRENCHED)
- EXIST CONDUIT (BORED)
- RDWY ILLUM ASSEM (TRANS)
- RDWY ILLUM ASSEM (SHOE/BRIDGE)
- PROP HIGH MAST ILLUM POLE W/ GB
- EXIST RDWY ILLUM ASSEM (TRANS)
- EXIST/PROP ELEC SERVICE
- (1) RETROFIT GROUND BOX LID
- (2) GROUND BOX (PREPARE)

POLE DESIGNATION

HM-S#-A#
- POLE #
- CIRCUIT #
- SERVICE #

CONDUIT DESIGNATION

ES#-##
- RUN #
- SERVICE #
- E - EXIST CONDUIT
- P - PROP CONDUIT

N

CONDUIT AND CONDUCTOR RUNS								
RUN NAME	SERVICE	CIRCUITS	RUN LENGTH	CONDUIT			EQUIPMENT GROUNDING CONDUCTOR	ELECTRICAL CONDUCTOR
				0618	0618	0618	6071	6071
				7036	7061	7090	6003	6003
				CONDT (PVC) (SCH 40) (3")	CONDT (PVC) (SCH 80)	CONDUIT (PREPARE)	ALUMINUM ELECTRICAL COND (#6 XHHW)	ALUMINUM ELECTRICAL COND (#6 XHHW)
				LF	LF	LF	LF	LF
PS1-12	PS1	C	261	261				
PS1-13	PS1	C	60	60				
ES1-10	ES1	BC	36	SPLICE EXISTING TO PROPOSED				
ES1-11	ES1	B	73	SPLICE EXISTING TO PROPOSED				
ES1-12	ES1	B	191	NO WORK				
ES1-13	ES1	B	89	NO WORK				
ES1-14	ES1	C	282			282	282	564
ES1-15	ES1	C	193			193	193	386
ES1-16	ES1	C	60			60	60	120
ES1-17	ES1	C	102			102	102	204
ES1-26	ES1	C	128	SPLICE EXISTING TO PROPOSED				
ES1-27	ES1	C	123	SPLICE EXISTING TO PROPOSED				
PS3-09	PS3	A	95	95			95	190
			SHEET TOTAL:	416		637	732	1464

SUMMARY OF ILLUMINATION ITEMS				
BID CODE		DESCRIPTION	UNIT	QTY
416	7035	DRILL SHAFT (HIGH MAST POLE) (48 IN)	LF	50
432	7001	RIPRAP (CONC)(4 IN)	CY	4.66
618	7036	CONDT (PVC) (SCH 40) (3")	LF	416
618	7090	CONDUIT (PREPARE)	LF	637
624	7014	INSTL GROUND BOX (W/SECURE LID)	EA	3
624	7015	RETRO GROUND BOX (W/SECURE LID)	EA	7
6071	7003	ALUMINUM ELECTRICAL COND (#6 XHHW)	LF	2196
6083	7001	LED HI MST(100 FT)(80MPH)(6FIXT)(TY B)	EA	2

POLE	LOCATION		ASSEMBLY TYPE	FOUNDATION DIAMETER	FOUNDATION LENGTH (FT) *
	STATION	OFFSET (FT)			
HM-S1-C1	272+55	95 RT	(100 FT)(80MPH)(6FIXT)(TY B)	48	25
HM-S3-A1	279+05	90 LT	(100 FT)(80MPH)(6FIXT)(TY B)	48	25

* INCLUDES 3 FEET EXPOSURE

INTERIM REVIEW

THIS DOCUMENT IS RELEASED FOR THE PURPOSE OF INTERIM REVIEW UNDER THE AUTHORITY OF

PATRICK JALUFKA P.E., ON: 7/11/2025

IT IS NOT TO BE USED FOR CONSTRUCTION

PRELIMINARY NOT FOR CONSTRUCTION

© 2026 Texas Department of Transportation

ILLUMINATION LAYOUT

SCALE: 1" = 100' HORIZ. (0 25 50 100 FEET)

SHEET 4 OF 20

CHANGE ORDER	FED. RD. DIV. NO.	CONT	SECT	JOB	HIGHWAY
	6	0231	03	156	IH-14
	STATE	DIST	COUNTY		SHEET NO.
	TEXAS	WACO	BELL		88

c:\txdot\pw*online*txdot3\patrick.jalufka\d0785500\Illumination Layout (WAC) V2.dgn 7/11/2025 4:37:52 PM
NODE

c:\txdot\pw*online*\txdot3\patrick.jalufka\d0785500\Illumination Layout (WAC) V2.dgn 7/11/2025 4:37:53 PM

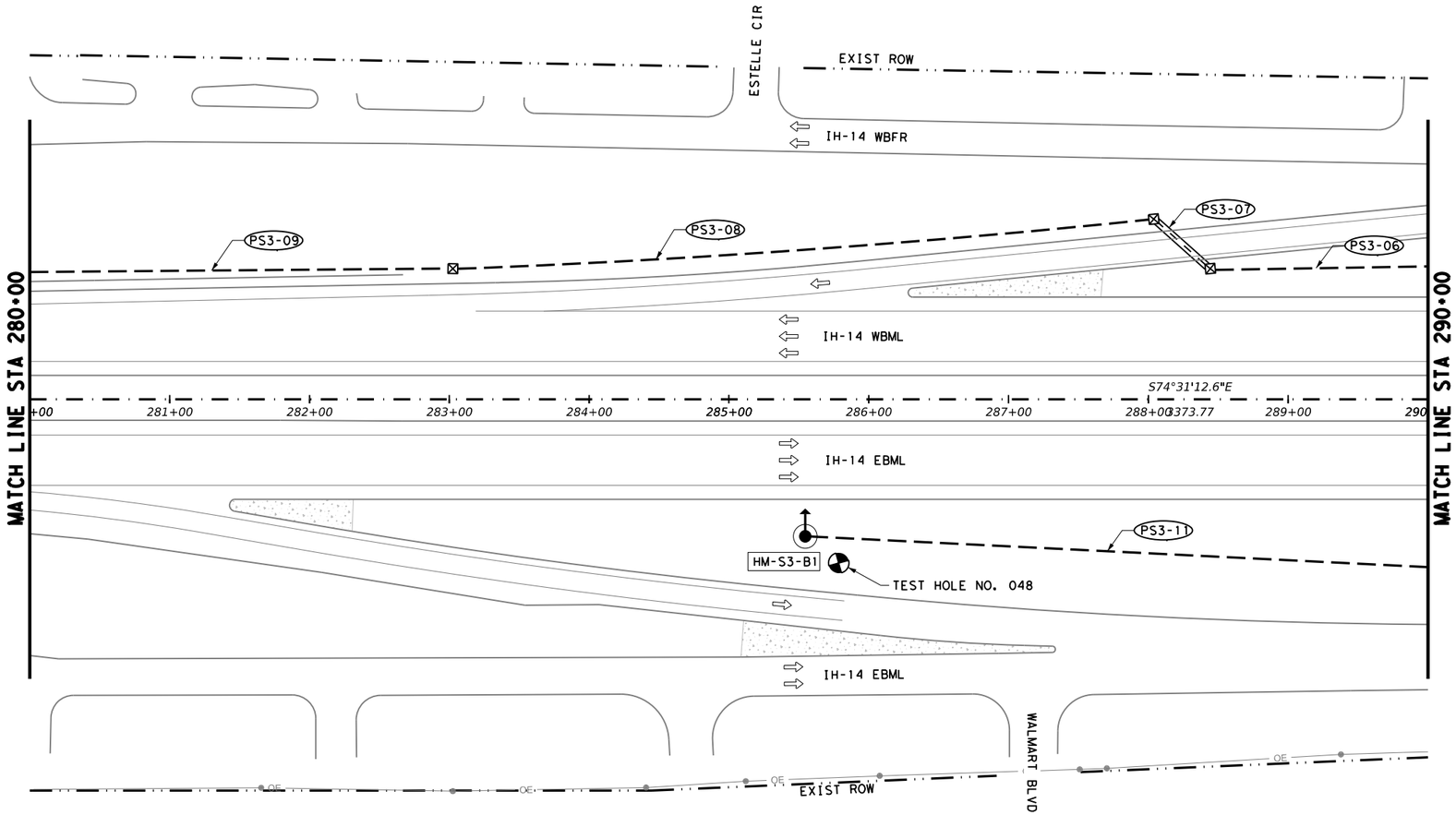

LEGEND

- EXIST GROUND BOX (TY A)
- PROP GROUND BOX (TY D W/ APRON)
- EXIST CONDUIT (TRENCHED)
- EXIST CONDUIT (BORED)
- PROP CONDUIT (TRENCHED)
- EXIST CONDUIT (BORED)
- RDWY ILLUM ASSEM (TRANS)
- RDWY ILLUM ASSEM (SHOE/BRIDGE)
- PROP HIGH MAST ILLUM POLE W/ GB
- EXIST RDWY ILLUM ASSEM (TRANS)
- EXIST/PROP ELEC SERVICE
- (1) RETROFIT GROUND BOX LID
- (2) GROUND BOX (PREPARE)

POLE DESIGNATION

HM-S#-A#
- POLE #
- CIRCUIT #
- SERVICE #

CONDUIT DESIGNATION

ES#-##
- RUN #
- SERVICE #
- E - EXIST CONDUIT
- P - PROP CONDUIT

CONDUIT AND CONDUCTOR RUNS

RUN NAME	SERVICE	CIRCUITS	RUN LENGTH	CONDUIT			EQUIPMENT GROUNDING CONDUCTOR	ELECTRICAL CONDUCTOR
				0618	0618	0618	6071	6071
				7036	7061	7090	6003	6003
				CONDT (PVC) (SCH 40) (3")	CONDT (PVC) (SCH 80)	CONDUIT (PREPARE)	ALUMINUM ELECTRICAL COND (#6 XHHW)	ALUMINUM ELECTRICAL COND (#6 XHHW)
				LF	LF	LF	LF	LF
PS3-06	PS3	A	156	156			156	312
PS3-07	PS3	A	54		54		54	108
PS3-08	PS3	A	502	502			502	1004
PS3-09	PS3	A	303	303			303	606
PS3-11	PS3	B	446	446			446	892
SHEET TOTAL:				1407	54		1461	2922

SUMMARY OF ILLUMINATION ITEMS

BID CODE	DESCRIPTION	UNIT	QTY
416 7035	DRILL SHAFT (HIGH MAST POLE) (48 IN)	LF	23
432 7001	RIPRAP (CONC)(4 IN)	CY	2.33
618 7036	CONDT (PVC) (SCH 40) (3")	LF	1407
624 7014	INSTL GROUND BOX (W/SECURE LID)	EA	4
6071 7003	ALUMINUM ELECTRICAL COND (#6 XHHW)	LF	4383
6083 7001	LED HI MST(100 FT)(80MPH)(6FIXT)(TY B)	EA	1

ILLUMINATION ASSEMBLY SUMMARY

POLE	LOCATION		ASSEMBLY TYPE	FOUNDATION DIAMETER	FOUNDATION LENGTH (FT) *
	STATION	OFFSET (FT)			
HM-S3-B1	285+55	98 RT	(100 FT)(80MPH)(6FIXT)(TY B)	48	23

* INCLUDES 3 FEET EXPOSURE

INTERIM REVIEW

THIS DOCUMENT IS RELEASED FOR THE PURPOSE OF INTERIM REVIEW UNDER THE AUTHORITY OF

PATRICK JALUFKA P.E., ON: 7/11/2025

IT IS NOT TO BE USED FOR CONSTRUCTION

PRELIMINARY NOT FOR CONSTRUCTION

© 2026 Texas Department of Transportation

ILLUMINATION LAYOUT

SCALE: 1" = 100' HORIZ. (0 25 50 100 FEET)

SHEET 5 OF 20

CHANGE ORDER	FED. RD. DIV. NO.	CONT	SECT	JOB	HIGHWAY
	6	0231	03	156	IH-14
	STATE	DIST	COUNTY		SHEET NO.
	TEXAS	WACO	BELL		89

NODE

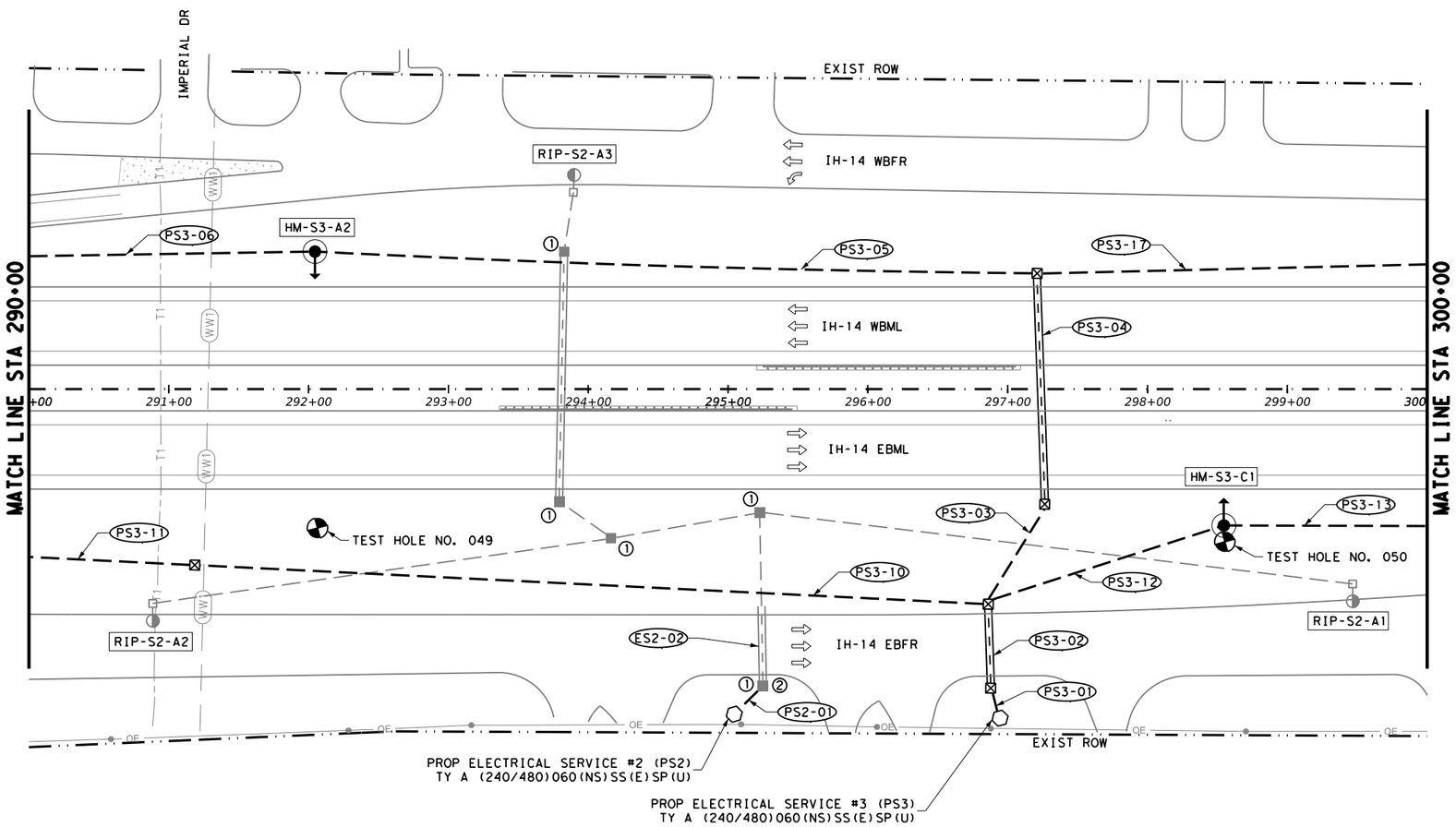

LEGEND

- EXIST GROUND BOX (TY A)
- PROP GROUND BOX (TY D W/ APRON)
- EXIST CONDUIT (TRENCHED)
- EXIST CONDUIT (BORED)
- PROP CONDUIT (TRENCHED)
- EXIST CONDUIT (BORED)
- RDWY ILLUM ASSEM (TRANS)
- RDWY ILLUM ASSEM (SHOE/BRIDGE)
- PROP HIGH MAST ILLUM POLE W/ GB
- EXIST RDWY ILLUM ASSEM (TRANS)
- EXIST/PROP ELEC SERVICE
- (1) RETROFIT GROUND BOX LID
- (2) GROUND BOX (PREPARE)

POLE DESIGNATION

HM-S#-A#
- POLE #
- CIRCUIT #
- SERVICE #

CONDUIT DESIGNATION

ES#-##
- RUN #
- SERVICE #
- E - EXIST CONDUIT
- P - PROP CONDUIT

CONDUIT AND CONDUCTOR RUNS

RUN NAME	SERVICE	CIRCUITS	RUN LENGTH	CONDUIT			EQUIPMENT GROUNDING CONDUCTOR	ELECTRICAL CONDUCTOR
				0618	0618	0618	6071	6071
				7036	7061	7090	6003	6003
				CONDT (PVC) (SCH 40) (3")	CONDT (PVC) (SCH 80)	CONDUIT (PREPARE)	ALUMINUM ELECTRICAL COND (#6 XHHW)	ALUMINUM ELECTRICAL COND (#6 XHHW)
				LF	LF	LF	LF	LF
PS2-01	PS2	A	29	29			29	58
ES2-02	PS2	A	124	SPLICE EXISTING TO PROPOSED				
PS3-01	PS3	ABCD	23	23			23	184
PS3-02	PS3	ABCD	61		61		61	488
PS3-03	PS3	AD	82	82			82	328
PS3-04	PS3	AD	165		165		165	660
PS3-05	PS3	A	517	517			517	1034
PS3-06	PS3	A	205	205			205	410
PS3-10	PS3	B	568	568			568	1136
PS3-11	PS3	B	119	119			119	238
PS3-12	PS3	C	178	178			178	356
PS3-13	PS3	C	145	145			145	290
PS3-17	PS3	D	279	279			279	558
			SHEET TOTAL:	2145	226		2371	5740

SUMMARY OF ILLUMINATION ITEMS

BID CODE		DESCRIPTION	UNIT	QTY
416	7035	DRILL SHAFT (HIGH MAST POLE) (48 IN)	LF	45
432	7001	RIPRAP (CONC)(4 IN)	CY	4.66
618	7036	CONDT (PVC) (SCH 40) (3")	LF	2145
618	7061	CONDT (PVC) (SCH 80) (3") (BORE)	LF	226
624	7014	INSTL GROUND BOX (W/SECURE LID)	EA	7
624	7015	RETRO GROUND BOX (W/SECURE LID)	EA	5
628	7049	ELC SRV TY A 240/480 060(NS)SS(E)SP(U)	EA	2
6013	7006	GROUND BOX (PREPARE)	EA	1
6071	7003	ALUMINUM ELECTRICAL COND (#6 XHHW)	LF	8111
6083	7001	LED HI MST(100 FT)(80MPH)(6FIXT)(TY B)	EA	2

ILLUMINATION ASSEMBLY SUMMARY

POLE	LOCATION		ASSEMBLY TYPE	FOUNDATION DIAMETER	FOUNDATION LENGTH (FT) *
	STATION	OFFSET (FT)			
HM-S3-A2	292+05	98 LT	(100 FT)(80MPH)(6FIXT)(TY B)	48	25
HM-S3-C1	298+55	98 RT	(100 FT)(80MPH)(6FIXT)(TY B)	48	20

* INCLUDES 3 FEET EXPOSURE

INTERIM REVIEW

THIS DOCUMENT IS RELEASED FOR THE PURPOSE OF INTERIM REVIEW UNDER THE AUTHORITY OF

PATRICK JALUFKA P.E., ON: 7/8/2025

IT IS NOT TO BE USED FOR CONSTRUCTION

PRELIMINARY NOT FOR CONSTRUCTION

© 2026 Texas Department of Transportation

ILLUMINATION LAYOUT

SCALE: 1" = 100' HORIZ. (0 25 50 100 FEET)

SHEET 6 OF 20

CHANGE ORDER	FED. RD. DIV. NO.	CONT	SECT	JOB	HIGHWAY
	6	0231	03	156	IH-14
	STATE	DIST	COUNTY		SHEET NO.
	TEXAS	WACO	BELL		90

c:\txdot\pwonline\txdot3\patrick.jalufka\d0785500\illumination Layout (WAC) V2.dgn 7/11/2025 4:37:54 PM
NODE

c:\txdot\pw*online*\txdot3\patrick.jalufka\d0785500\illumination Layout (WAC) V2.dgn 7/11/2025 4:37:55 PM

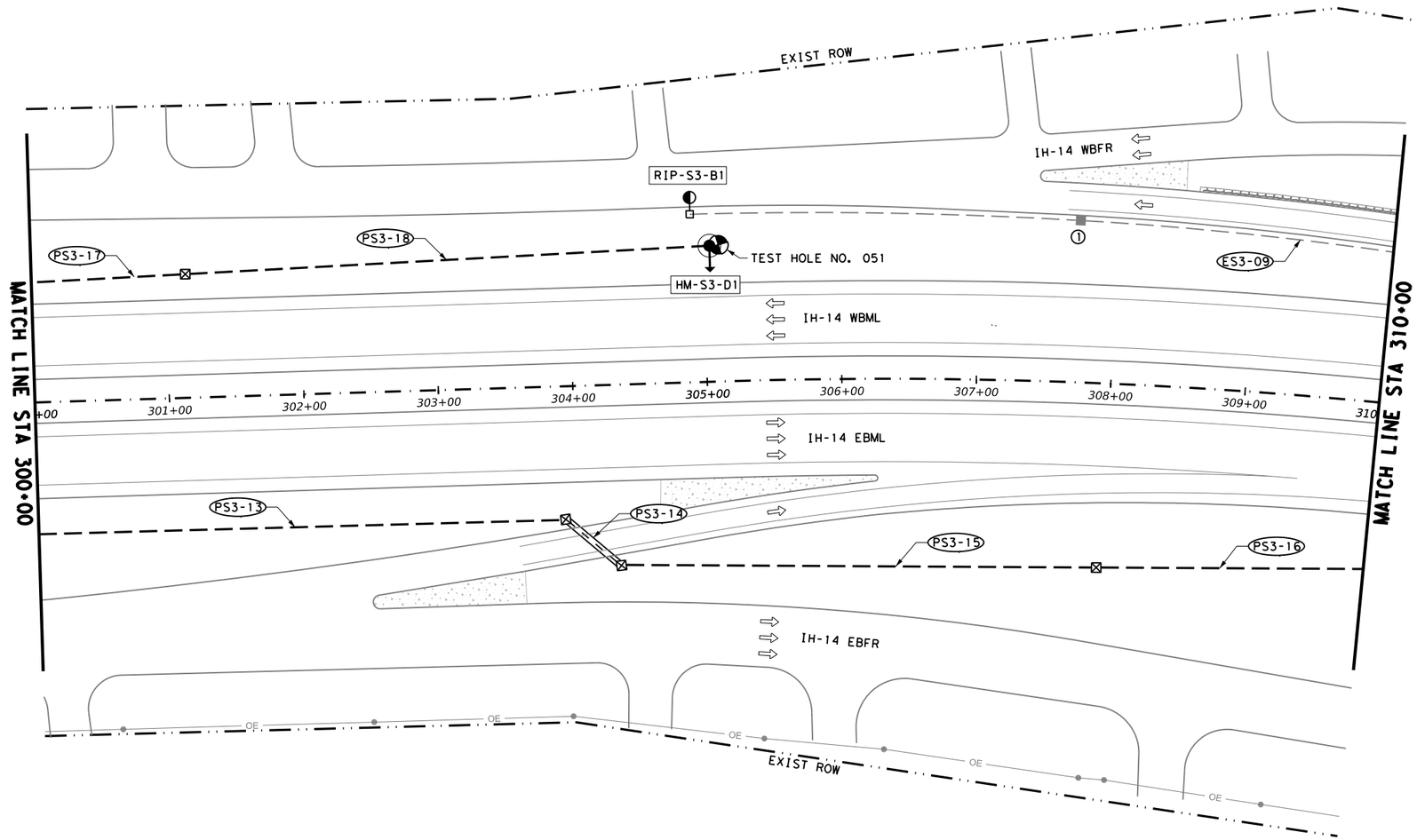

LEGEND

- EXIST GROUND BOX (TY A)
- PROP GROUND BOX (TY D W/ APRON)
- EXIST CONDUIT (TRENCHED)
- EXIST CONDUIT (BORED)
- PROP CONDUIT (TRENCHED)
- EXIST CONDUIT (BORED)
- RDWY ILLUM ASSEM (TRANS)
- RDWY ILLUM ASSEM (SHOE/BRIDGE)
- PROP HIGH MAST ILLUM POLE W/ GB
- EXIST RDWY ILLUM ASSEM (TRANS)
- EXIST/PROP ELEC SERVICE
- (1) RETROFIT GROUND BOX LID
- (2) GROUND BOX (PREPARE)

POLE DESIGNATION

HM-S#-A#
- POLE #
- CIRCUIT #
- SERVICE #

CONDUIT DESIGNATION

ES#-##
- RUN #
- SERVICE #
- E - EXIST CONDUIT
- P - PROP CONDUIT

N

CONDUIT AND CONDUCTOR RUNS								
RUN NAME	SERVICE	CIRCUITS	RUN LENGTH	CONDUIT			EQUIPMENT GROUNDING CONDUCTOR	ELECTRICAL CONDUCTOR
				0618	0618	0618	6071	6071
				7036	7061	7090	6003	6003
				CONDT (PVC) (SCH 40) (3")	CONDT (PVC) (SCH 80)	CONDUIT (PREPARE)	ALUMINUM ELECTRICAL COND (#6 XHHW)	ALUMINUM ELECTRICAL COND (#6 XHHW)
				LF	LF	LF	LF	LF
PS3-13	PS3	C	392	392			392	784
PS3-14	PS3	C	54		54		54	108
PS3-15	PS3	C	353	353			353	706
PS3-16	PS3	C	198	198			198	396
PS3-17	PS3	D	115	115			115	230
PS3-18	PS3	D	390	390			390	780
ES3-09	ES3	B	234			234	234	468
ES3-10	ES3	B	291			291	291	582
SHEET TOTAL:				1448	54	525	2027	4054

SUMMARY OF ILLUMINATION ITEMS				
BID CODE		DESCRIPTION	UNIT	QTY
416	7035	DRILL SHAFT (HIGH MAST POLE) (48 IN)	LF	18
432	7001	RIPRAP (CONC)(4 IN)	CY	2.33
610	7124	IN RD IL (TY SA) 40T-8 (250W EQ) LED	EA	1
618	7036	CONDT (PVC) (SCH 40) (3")	LF	1448
618	7061	CONDT (PVC) (SCH 80) (3") (BORE)	LF	54
618	7090	CONDUIT (PREPARE)	LF	525
624	7014	INSTL GROUND BOX (W/SECURE LID)	EA	5
624	7015	RETRO GROUND BOX (W/SECURE LID)	EA	1
6071	7003	ALUMINUM ELECTRICAL COND (#6 XHHW)	LF	6081
6071	7004	ALUMINUM ELECTRICAL COND (#8 XHHW)	LF	1575
6083	7001	LED HI MST(100 FT)(80MPH)(6FIXT)(TY B)	EA	1

ILLUMINATION ASSEMBLY SUMMARY					
POLE	LOCATION		ASSEMBLY TYPE	FOUNDATION DIAMETER	FOUNDATION LENGTH (FT) *
	STATION	OFFSET (FT)			
HM-S3-D1	305+05	101 LT	(100 FT)(80MPH)(6FIXT)(TY B)	48	18

* INCLUDES 3 FEET EXPOSURE

INTERIM REVIEW

THIS DOCUMENT IS RELEASED FOR THE PURPOSE OF INTERIM REVIEW UNDER THE AUTHORITY OF

PATRICK JALUFKA P.E., ON: 7/11/2025

IT IS NOT TO BE USED FOR CONSTRUCTION

PRELIMINARY NOT FOR CONSTRUCTION

© 2026 Texas Department of Transportation

ILLUMINATION LAYOUT

SCALE: 1" = 100' HORIZ. (0 25 50 100 FEET)

SHEET 7 OF 20

CHANGE ORDER	FED. RD. DIV. NO.	CONT	SECT	JOB	HIGHWAY
	6	0231	03	156	IH-14
	STATE	DIST	COUNTY		SHEET NO.
	TEXAS	WACO	BELL		91

NODE

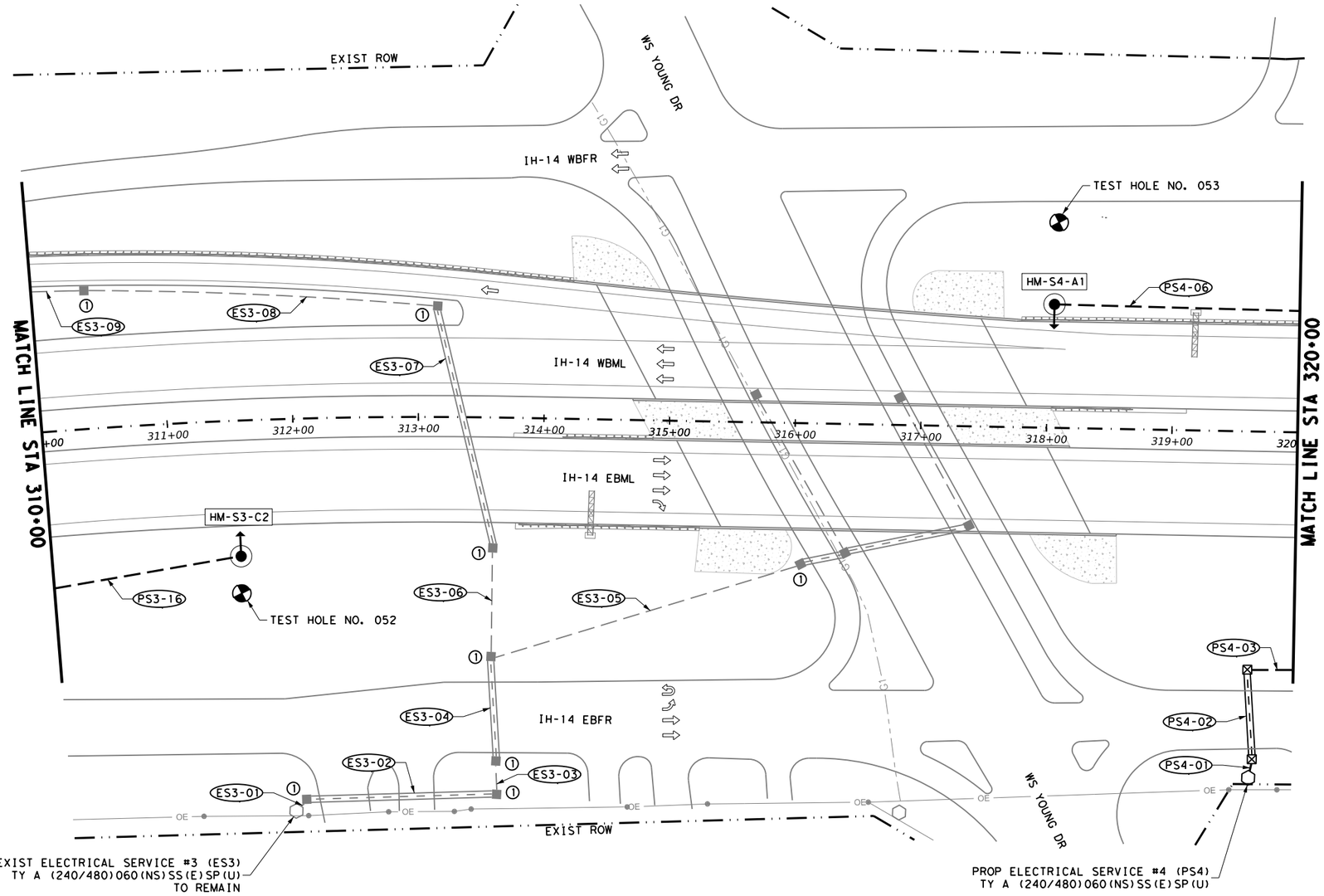

LEGEND

- EXIST GROUND BOX (TY A)
- PROP GROUND BOX (TY D W/ APRON)
- EXIST CONDUIT (TRENCHED)
- EXIST CONDUIT (BORED)
- PROP CONDUIT (TRENCHED)
- EXIST CONDUIT (BORED)
- RDWY ILLUM ASSEM (TRANS)
- RDWY ILLUM ASSEM (SHOE/BRIDGE)
- PROP HIGH MAST ILLUM POLE W/ GB
- EXIST RDWY ILLUM ASSEM (TRANS)
- EXIST/PROP ELEC SERVICE
- (1) RETROFIT GROUND BOX LID
- (2) GROUND BOX (PREPARE)

POLE DESIGNATION

HM-S#-A#
- POLE #
- CIRCUIT #
- SERVICE #

CONDUIT DESIGNATION

ES#-##
- RUN #
- SERVICE #
- E - EXIST CONDUIT
- P - PROP CONDUIT

N

CONDUIT AND CONDUCTOR RUNS								
RUN NAME	SERVICE	CIRCUITS	RUN LENGTH	CONDUIT			EQUIPMENT GROUNDING CONDUCTOR	ELECTRICAL CONDUCTOR
				0618	0618	0618	6071	6071
				7036	7061	7090	6003	6003
				CONDT (PVC) (SCH 40) (3")	CONDT (PVC) (SCH 80)	CONDUIT (PREPARE)	ALUMINUM ELECTRICAL COND (#6 XHHW)	ALUMINUM ELECTRICAL COND (#6 XHHW)
				LF	LF	LF	LF	LF
PS3-16	PS3	C	151	151			151	302
ES3-01	ES3	AB	12			12	12	48
ES3-02	ES3	AB	151			151	151	604
ES3-03	ES3	AB	26			26	26	104
ES3-04	ES3	AB	83			83	83	332
ES3-05	ES3	A	257			257	257	514
ES3-06	ES3	B	86			86	86	172
ES3-07	ES3	B	197			197	197	394
ES3-08	ES3	B	282			282	282	564
ES3-09	ES3	B	42			42	42	84
PS4-01	PS4	AB	15	15			15	60
PS4-02	PS4	AB	71		71		71	284
PS4-03	PS4	AB	37	37			37	148
PS4-06	PS4	A	195	195			195	390
SHEET TOTAL:				398	71	1136	1605	4000

SUMMARY OF ILLUMINATION ITEMS			
BID CODE	DESCRIPTION	UNIT	QTY
416 7035	DRILL SHAFT (HIGH MAST POLE) (48 IN)	LF	45
432 7001	RIPRAP (CONC)(4 IN)	CY	4.66
618 7036	CONDT (PVC) (SCH 40) (3")	LF	398
618 7061	CONDT (PVC) (SCH 80) (3") (BORE)	LF	71
618 7090	CONDUIT (PREPARE)	LF	1136
624 7014	INSTL GROUND BOX (W/SECURE LID)	EA	4
624 7015	RETRO GROUND BOX (W/SECURE LID)	EA	8
628 7049	ELC SRV TY A 240/480 060(NS)SS(E)SP(U)	EA	1
6071 7003	ALUMINUM ELECTRICAL COND (#6 XHHW)	LF	5605
6071 7004	ALUMINUM ELECTRICAL COND (#8 XHHW)	LF	864
6083 7001	LED HI MST(100 FT)(80MPH)(6FIXT)(TY B)	EA	2

ILLUMINATION ASSEMBLY SUMMARY					
POLE	LOCATION		ASSEMBLY TYPE	FOUNDATION DIAMETER	FOUNDATION LENGTH (FT) *
	STATION	OFFSET (FT)			
HM-S3-C2	311+55	108 RT	(100 FT)(80MPH)(6FIXT)(TY B)	48	20
HM-S4-A1	318+05	98 LT	(100 FT)(80MPH)(6FIXT)(TY B)	48	25

* INCLUDES 3 FEET EXPOSURE

INTERIM REVIEW

THIS DOCUMENT IS RELEASED FOR THE PURPOSE OF INTERIM REVIEW UNDER THE AUTHORITY OF

PATRICK JALUFKA P.E., ON: 7/8/2025

IT IS NOT TO BE USED FOR CONSTRUCTION

PRELIMINARY NOT FOR CONSTRUCTION

© 2026 Texas Department of Transportation

ILLUMINATION LAYOUT

SCALE: 0 25 50 100 FEET
1" = 100' HORIZ.

SHEET 8 OF 20

CHANGE ORDER	FED. RD. DIV. NO.	CONT	SECT	JOB	HIGHWAY
	6	0231	03	156	IH-14
	STATE	DIST	COUNTY		SHEET NO.
	TEXAS	WACO	BELL		92

c:\txdot\pw*online\txdot3\patrick.jalufka\d0785500\illumination Layout (WAC) V2.dgn 7/11/2025 4:37:56 PM
NODE

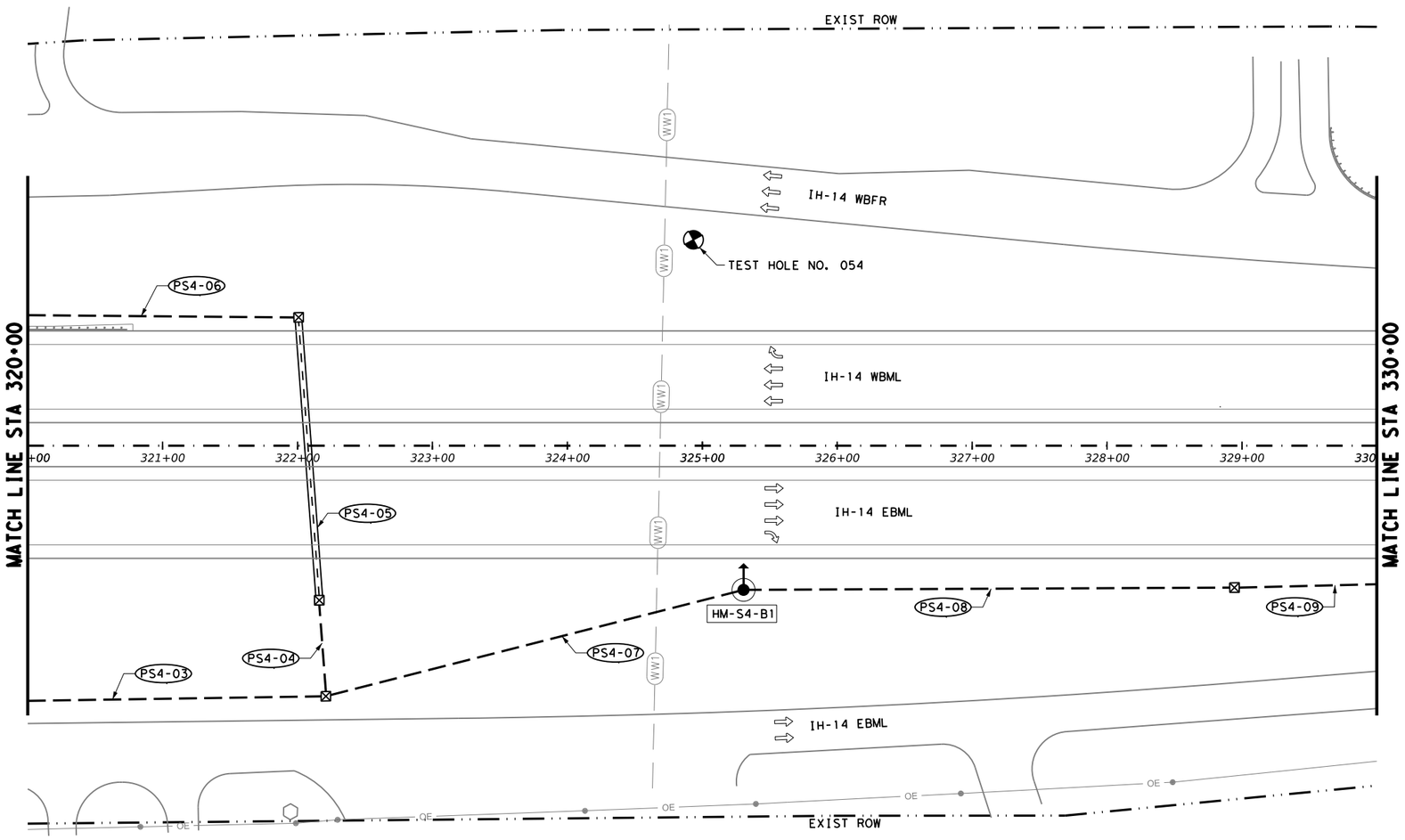

LEGEND

- EXIST GROUND BOX (TY A)
- PROP GROUND BOX (TY D W/ APRON)
- EXIST CONDUIT (TRENCHED)
- EXIST CONDUIT (BORED)
- PROP CONDUIT (TRENCHED)
- EXIST CONDUIT (BORED)
- RDWY ILLUM ASSEM (TRANS)
- RDWY ILLUM ASSEM (SHOE/BRIDGE)
- PROP HIGH MAST ILLUM POLE W/ GB
- EXIST RDWY ILLUM ASSEM (TRANS)
- EXIST/PROP ELEC SERVICE
- (1) RETROFIT GROUND BOX LID
- (2) GROUND BOX (PREPARE)

POLE DESIGNATION

HM-S#-A#
- POLE #
- CIRCUIT #
- SERVICE #

CONDUIT DESIGNATION

ES#-##
- RUN #
- SERVICE #
- E - EXIST CONDUIT
- P - PROP CONDUIT

CONDUIT AND CONDUCTOR RUNS

RUN NAME	SERVICE	CIRCUITS	RUN LENGTH	CONDUIT			EQUIPMENT GROUNDING CONDUCTOR	ELECTRICAL CONDUCTOR
				0618	0618	0618	6071	6071
				7036	7061	7090	6003	6003
				CONDT (PVC) (SCH 40) (3")	CONDT (PVC) (SCH 80)	CONDUIT (PREPARE)	ALUMINUM ELECTRICAL COND (#6 XHHW)	ALUMINUM ELECTRICAL COND (#6 XHHW)
				LF	LF	LF	LF	LF
PS4-03	PS4	AB	221	221			221	884
PS4-04	PS4	A	72	72			72	144
PS4-05	PS4	A	210		210		210	420
PS4-06	PS4	A	201	201			201	402
PS4-07	PS4	B	319	319			319	638
PS4-08	PS4	B	364	364			364	728
PS4-09	PS4	B	106	106			106	212
			SHEET TOTAL:	1283	210		1493	3428

SUMMARY OF ILLUMINATION ITEMS

BID CODE		DESCRIPTION	UNIT	QTY
416	7035	DRILL SHAFT (HIGH MAST POLE) (48 IN)	LF	25
432	7001	RIPRAP (CONC) (4 IN)	CY	2.33
618	7036	CONDT (PVC) (SCH 40) (3")	LF	1283
618	7061	CONDT (PVC) (SCH 80) (3") (BORE)	LF	210
624	7014	INSTL GROUND BOX (W/SECURE LID)	EA	5
6071	7003	ALUMINUM ELECTRICAL COND (#6 XHHW)	LF	4921
6083	7001	LED HI MST(100 FT)(80MPH)(6FIXT)(TY B)	EA	1

ILLUMINATION ASSEMBLY SUMMARY

POLE	LOCATION		ASSEMBLY TYPE	FOUNDATION DIAMETER	FOUNDATION LENGTH (FT) *
	STATION	OFFSET (FT)			
HM-S4-B1	325+31	107 RT	(100 FT)(80MPH)(6FIXT)(TY B)	48	25

* INCLUDES 3 FEET EXPOSURE

INTERIM REVIEW

THIS DOCUMENT IS RELEASED FOR THE PURPOSE OF INTERIM REVIEW UNDER THE AUTHORITY OF

PATRICK JALUFKA P.E., ON: 7/8/2025

IT IS NOT TO BE USED FOR CONSTRUCTION

PRELIMINARY NOT FOR CONSTRUCTION

© 2026 Texas Department of Transportation

ILLUMINATION LAYOUT

SCALE: 0 25 50 100 FEET
1" = 100' HORIZ.

SHEET 9 OF 20

CHANGE ORDER	FED. RD. DIV. NO.	CONT	SECT	JOB	HIGHWAY
	6	0231	03	156	IH-14
	STATE	DIST	COUNTY		SHEET NO.
	TEXAS	WACO	BELL		93

c:\txdot\pw*online\txdot3\patrick.jalufka\d0785500\Illumination Layout (WAC) V2.dgn 7/11/2025 4:37:57 PM
NODE

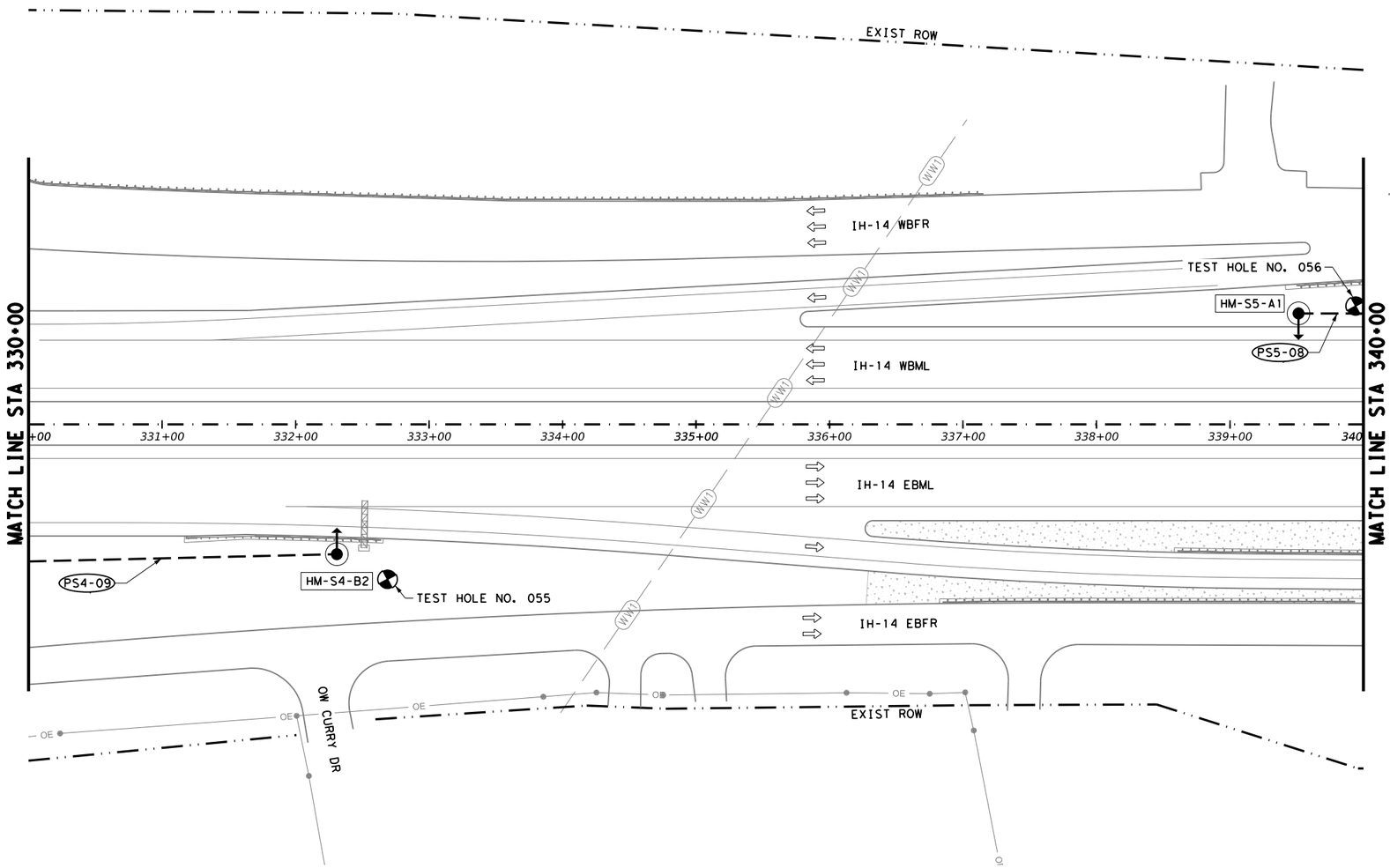

LEGEND

- EXIST GROUND BOX (TY A)
- PROP GROUND BOX (TY D W/ APRON)
- EXIST CONDUIT (TRENCHED)
- EXIST CONDUIT (BORED)
- PROP CONDUIT (TRENCHED)
- EXIST CONDUIT (BORED)
- RDWY ILLUM ASSEM (TRANS)
- RDWY ILLUM ASSEM (SHOE/BRIDGE)
- PROP HIGH MAST ILLUM POLE W/ GB
- EXIST RDWY ILLUM ASSEM (TRANS)
- EXIST/PROP ELEC SERVICE
- (1) RETROFIT GROUND BOX LID
- (2) GROUND BOX (PREPARE)

POLE DESIGNATION

HM-S#-A#
- POLE #
- CIRCUIT #
- SERVICE #

CONDUIT DESIGNATION

ES#-##
- RUN #
- SERVICE #
- E - EXIST CONDUIT
- P - PROP CONDUIT

N

CONDUIT AND CONDUCTOR RUNS								
RUN NAME	SERVICE	CIRCUITS	RUN LENGTH	CONDUIT			EQUIPMENT GROUNDING CONDUCTOR	ELECTRICAL CONDUCTOR
				0618	0618	0618	6071	6071
				7036	7061	7090	6003	6003
				CONDT (PVC) (SCH 40) (3")	CONDT (PVC) (SCH 80)	CONDUIT (PREPARE)	ALUMINUM ELECTRICAL COND (#6 XHHW)	ALUMINUM ELECTRICAL COND (#6 XHHW)
				LF	LF	LF	LF	LF
PS4-09	PS4	B	231	231			231	462
PS5-08	PS5	A	49	49			49	98
SHEET TOTAL:				280			280	560

SUMMARY OF ILLUMINATION ITEMS			
BID CODE	DESCRIPTION	UNIT	QTY
416 7035	DRILL SHAFT (HIGH MAST POLE) (48 IN)	LF	35
432 7001	RIPRAP (CONC) (4 IN)	CY	4.66
618 7036	CONDT (PVC) (SCH 40) (3")	LF	280
624 7014	INSTL GROUND BOX (W/SECURE LID)	EA	2
6071 7003	ALUMINUM ELECTRICAL COND (#6 XHHW)	LF	840
6083 7001	LED HI MST(100 FT)(80MPH)(6FIXT)(TY B)	EA	2

ILLUMINATION ASSEMBLY SUMMARY					
POLE	LOCATION		ASSEMBLY TYPE	FOUNDATION DIAMETER	FOUNDATION LENGTH (FT) *
	STATION	OFFSET (FT)			
HM-S4-B2	332+58	103 RT	(100 FT)(80MPH)(6FIXT)(TY B)	48	20
HM-S5-A1	339+51	83 LT	(100 FT)(80MPH)(6FIXT)(TY B)	48	15

* INCLUDES 3 FEET EXPOSURE

INTERIM REVIEW

THIS DOCUMENT IS RELEASED FOR THE PURPOSE OF INTERIM REVIEW UNDER THE AUTHORITY OF

PATRICK JALUFKA P.E., ON: 7/11/2025

IT IS NOT TO BE USED FOR CONSTRUCTION

PRELIMINARY NOT FOR CONSTRUCTION

© 2026 Texas Department of Transportation

ILLUMINATION LAYOUT

SCALE: 0 25 50 100 FEET
1" = 100' HORIZ.

SHEET 10 OF 20

CHANGE ORDER	FED. RD. DIV. NO.	CONT	SECT	JOB	HIGHWAY
	6	0231	03	156	IH-14
	STATE	DIST	COUNTY		SHEET NO.
	TEXAS	WACO	BELL		94

c:\txdot\pwonline\txdot3\patrick.jalufka\d0785500\Illumination Layout (WAC) V2.dgn 7/11/2025 4:37:58 PM
NODE

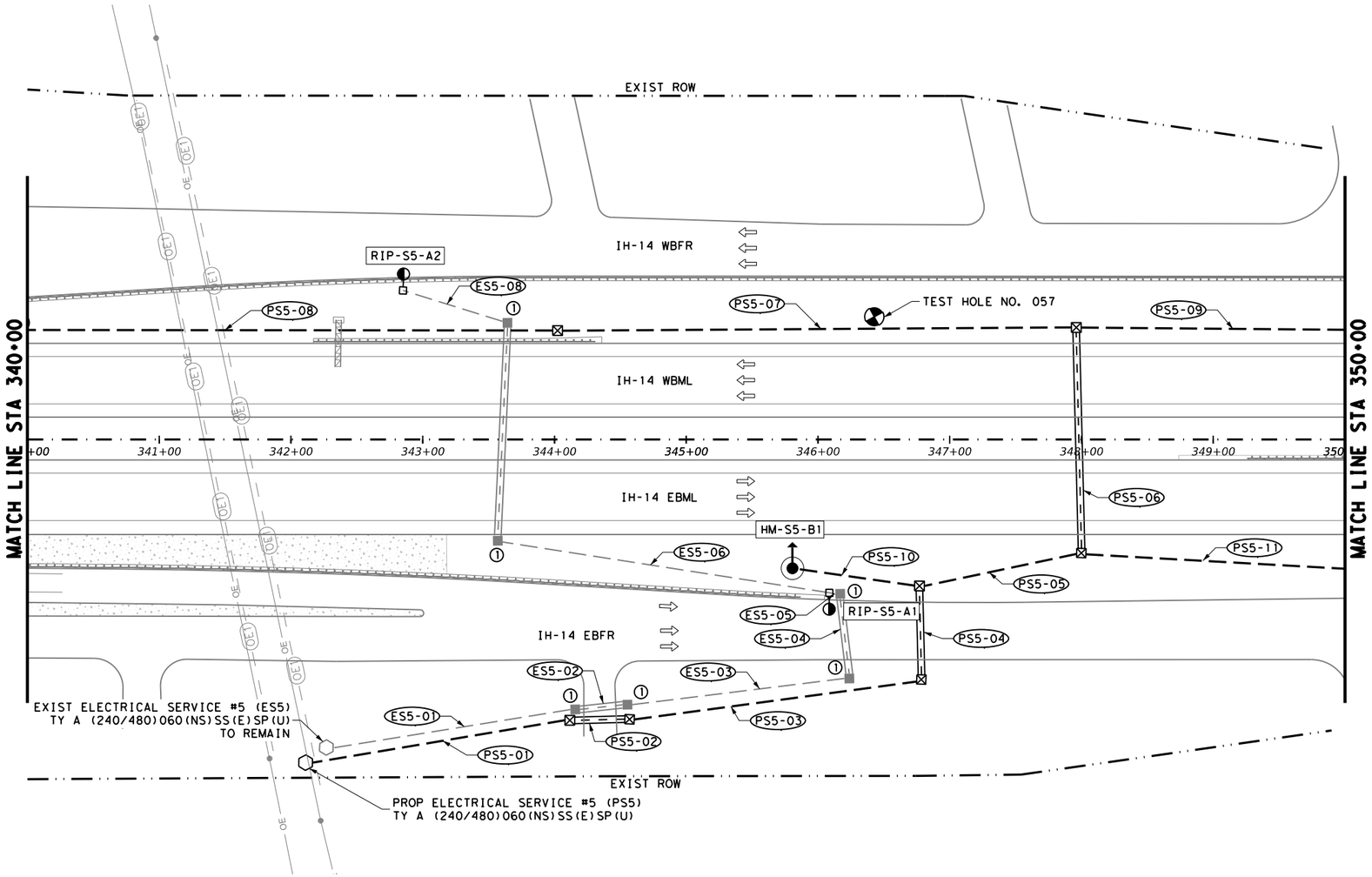

LEGEND

- EXIST GROUND BOX (TY A)
- PROP GROUND BOX (TY D W/ APRON)
- EXIST CONDUIT (TRENCHED)
- EXIST CONDUIT (BORED)
- PROP CONDUIT (TRENCHED)
- EXIST CONDUIT (BORED)
- RDWY ILLUM ASSEM (TRANS)
- RDWY ILLUM ASSEM (SHOE/BRIDGE)
- PROP HIGH MAST ILLUM POLE W/ GB
- EXIST RDWY ILLUM ASSEM (TRANS)
- EXIST/PROP ELEC SERVICE
- (1) RETROFIT GROUND BOX LID
- (2) GROUND BOX (PREPARE)

POLE DESIGNATION

HM-S#-A#
- POLE #
- CIRCUIT #
- SERVICE #

CONDUIT DESIGNATION

ES#-##
- RUN #
- SERVICE #
- E - EXIST CONDUIT
- P - PROP CONDUIT

N

CONDUIT AND CONDUCTOR RUNS

RUN NAME	SERVICE	CIRCUITS	RUN LENGTH	CONDUIT			EQUIPMENT GROUNDING CONDUCTOR	ELECTRICAL CONDUCTOR
				0618	0618	0618	6071	6071
				7036	7061	7090	6003	6003
				CONDT (PVC) (SCH 40) (3")	CONDT (PVC) (SCH 80)	CONDUIT (PREPARE)	ALUMINUM ELECTRICAL COND (#6 XHHW)	ALUMINUM ELECTRICAL COND (#6 XHHW)
				LF	LF	LF	LF	LF
PS5-01	PS5	AB	203	203			203	812
PS5-02	PS5	AB	46	46			46	184
PS5-03	PS5	AB	224	224			224	896
PS5-04	PS5	AB	70		70		70	280
PS5-05	PS5	AB	125	125			125	500
PS5-06	PS5	A	171		171		171	342
PS5-07	PS5	A	394	394			394	788
PS5-08	PS5	A	402	402			402	804
PS5-09	PS5	A	204	204			204	408
PS5-10	PS5	B	97	97			97	194
PS5-11	PS5	B	201	201			201	402
ES5-01	ES5	A	191			191	191	382
ES5-02	ES5	A	40			40	40	80
ES5-03	ES5	A	170			170	170	340
ES5-04	ES5	A	65			65	65	130
ES5-05	ES5	A	8			8	8	16
ES5-06	ES5	A	255			255	255	510
ES5-07	ES5	A	166			166	166	332
ES5-08	ES5	A	83			83	83	166
			SHEET TOTAL:	1896	241	978	3115	7566

SUMMARY OF ILLUMINATION ITEMS

BID CODE	DESCRIPTION	UNIT	QTY
416 7035	DRILL SHAFT (HIGH MAST POLE) (48 IN)	LF	25
432 7001	RIPRAP (CONC)(4 IN)	CY	2.33
610 7124	IN RD IL (TY SA) 40T-8 (250W EQ) LED	EA	2
618 7036	CONDT (PVC) (SCH 40) (3")	LF	1896
618 7090	CONDUIT (PREPARE)	LF	978
624 7014	INSTL GROUND BOX (W/SECURE LID)	EA	8
624 7015	RETRO GROUND BOX (W/SECURE LID)	EA	6
628 7049	ELC SRV TY A 240/480 060(NS)SS(E)SP(U)	EA	1
6071 7003	ALUMINUM ELECTRICAL COND (#6 XHHW)	LF	10681
6071 7004	ALUMINUM ELECTRICAL COND (#8 XHHW)	LF	978
6083 7001	LED HI MST(100 FT)(80MPH)(6FIXT)(TY B)	EA	1

ILLUMINATION ASSEMBLY SUMMARY

POLE	LOCATION		ASSEMBLY TYPE	FOUNDATION DIAMETER	FOUNDATION LENGTH (FT) *
	STATION	OFFSET (FT)			
HM-S5-B1	345+80	98 RT	(100 FT)(80MPH)(6FIXT)(TY B)	48	25

* INCLUDES 3 FEET EXPOSURE

INTERIM REVIEW

THIS DOCUMENT IS RELEASED FOR THE PURPOSE OF INTERIM REVIEW UNDER THE AUTHORITY OF

PATRICK JALUFKA P.E., ON: 7/11/2025

IT IS NOT TO BE USED FOR CONSTRUCTION

PRELIMINARY NOT FOR CONSTRUCTION

© 2026 Texas Department of Transportation

ILLUMINATION LAYOUT

SCALE: 1" = 100' HORIZ. (0 25 50 100 FEET)

SHEET 11 OF 20

CHANGE ORDER	FED. RD. DIV. NO.	CONT	SECT	JOB	HIGHWAY
	6	0231	03	156	IH-14
	STATE	DIST	COUNTY		SHEET NO.
	TEXAS	WACO	BELL		95

c:\txdot\pw*online*\txdot3\patrick.jalufka\d0785500\illumination Layout (WAC) V2.dgn 7/11/2025 4:37:59 PM NODE

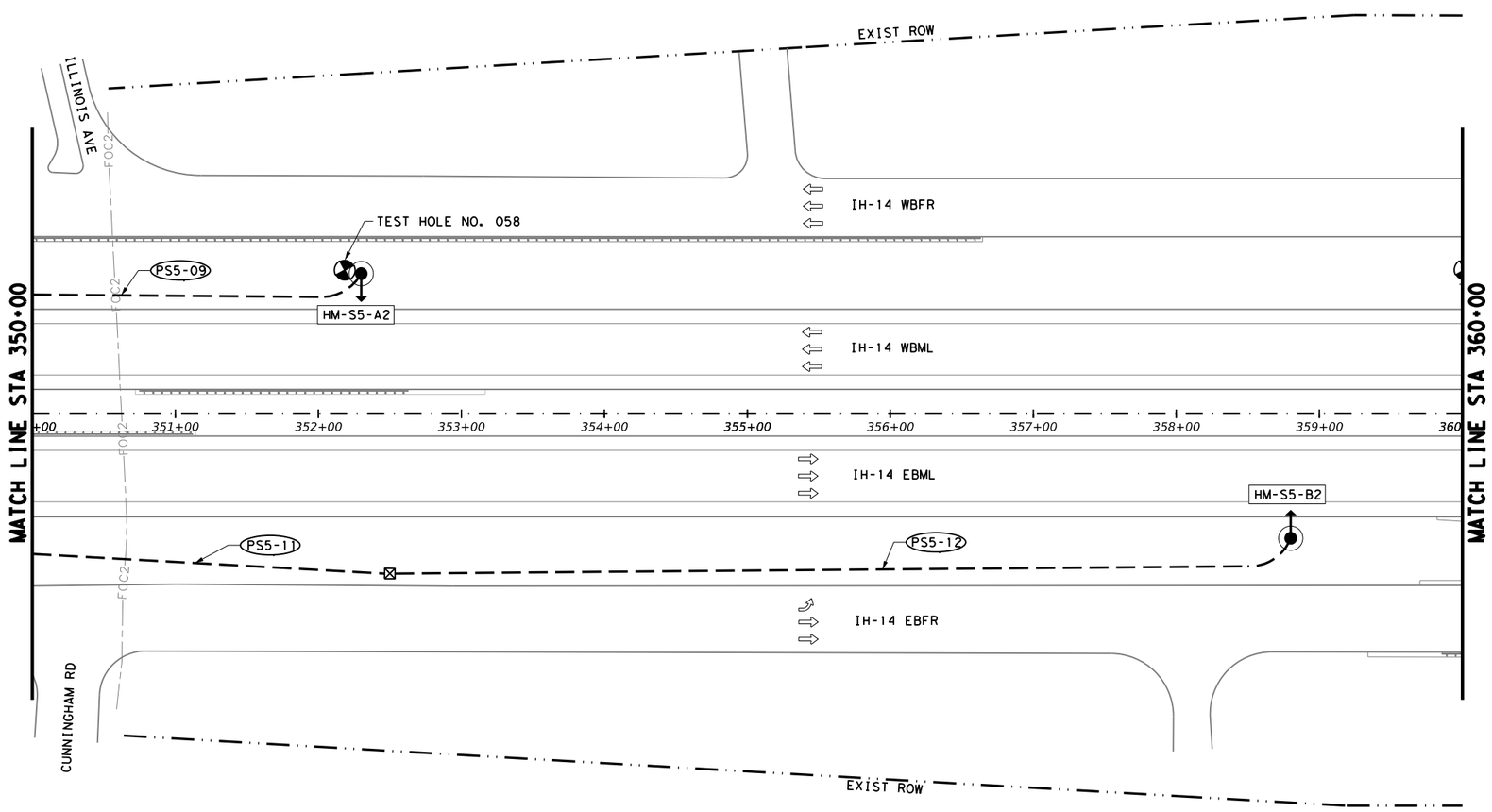

LEGEND

- EXIST GROUND BOX (TY A)
- PROP GROUND BOX (TY D W/ APRON)
- EXIST CONDUIT (TRENCHED)
- EXIST CONDUIT (BORED)
- PROP CONDUIT (TRENCHED)
- EXIST CONDUIT (BORED)
- RDWY ILLUM ASSEM (TRANS)
- RDWY ILLUM ASSEM (SHOE/BRIDGE)
- PROP HIGH MAST ILLUM POLE W/ GB
- EXIST RDWY ILLUM ASSEM (TRANS)
- EXIST/PROP ELEC SERVICE
- (1) RETROFIT GROUND BOX LID
- (2) GROUND BOX (PREPARE)

POLE DESIGNATION

HM-S#-A#
- POLE #
- CIRCUIT #
- SERVICE #

CONDUIT DESIGNATION

ES#-##
- RUN #
- SERVICE #
- E - EXIST CONDUIT
- P - PROP CONDUIT

N

CONDUIT AND CONDUCTOR RUNS

RUN NAME	SERVICE	CIRCUITS	RUN LENGTH	CONDUIT			EQUIPMENT GROUNDING CONDUCTOR	ELECTRICAL CONDUCTOR
				0618	0618	0618	6071	6071
				7036	7061	7090	6003	6003
				CONDT (PVC) (SCH 40) (3")	CONDT (PVC) (SCH 80)	CONDUIT (PREPARE)	ALUMINUM ELECTRICAL COND (#6 XHHW)	ALUMINUM ELECTRICAL COND (#6 XHHW)
				LF	LF	LF	LF	LF
PS5-09	PS5	A	236	236			236	472
PS5-11	PS5	B	250	250			250	500
PS5-12	PS5	B	638	638			638	1276
			SHEET TOTAL:	1124			1124	2248

SUMMARY OF ILLUMINATION ITEMS

BID CODE		DESCRIPTION	UNIT	QTY
416	7035	DRILL SHAFT (HIGH MAST POLE) (48 IN)	LF	48
432	7001	RIPRAP (CONC)(4 IN)	CY	4.66
618	7036	CONDT (PVC) (SCH 40) (3")	LF	1124
624	7014	INSTL GROUND BOX (W/SECURE LID)	EA	3
6071	7003	ALUMINUM ELECTRICAL COND (#6 XHHW)	LF	3372
6083	7001	LED HI MST(100 FT)(80MPH)(6FIXT)(TY B)	EA	2

ILLUMINATION ASSEMBLY SUMMARY

POLE	LOCATION		ASSEMBLY TYPE	FOUNDATION DIAMETER	FOUNDATION LENGTH (FT) *
	STATION	OFFSET (FT)			
HM-S5-A2	352+30	98 LT	(100 FT)(80MPH)(6FIXT)(TY B)	48	23
HM-S5-B2	358+80	87 RT	(100 FT)(80MPH)(6FIXT)(TY B)	48	25

* INCLUDES 3 FEET EXPOSURE

INTERIM REVIEW

THIS DOCUMENT IS RELEASED FOR THE PURPOSE OF INTERIM REVIEW UNDER THE AUTHORITY OF

PATRICK JALUFKA P.E., ON: 7/11/2025

IT IS NOT TO BE USED FOR CONSTRUCTION

PRELIMINARY NOT FOR CONSTRUCTION

© 2026 Texas Department of Transportation

ILLUMINATION LAYOUT

SCALE: 0 25 50 100 FEET
1" = 100' HORIZ.

SHEET 12 OF 20

CHANGE ORDER	FED. RD. DIV. NO.	CONT	SECT	JOB	HIGHWAY
	6	0231	03	156	IH-14
	STATE	DIST	COUNTY		SHEET NO.
	TEXAS	WACO	BELL		96

c:\txdot\pw*online\txdot3\patrick.jalufka\d0785500\Illumination Layout (WAC) V2.dgn 7/11/2025 4:38:01 PM
NODE

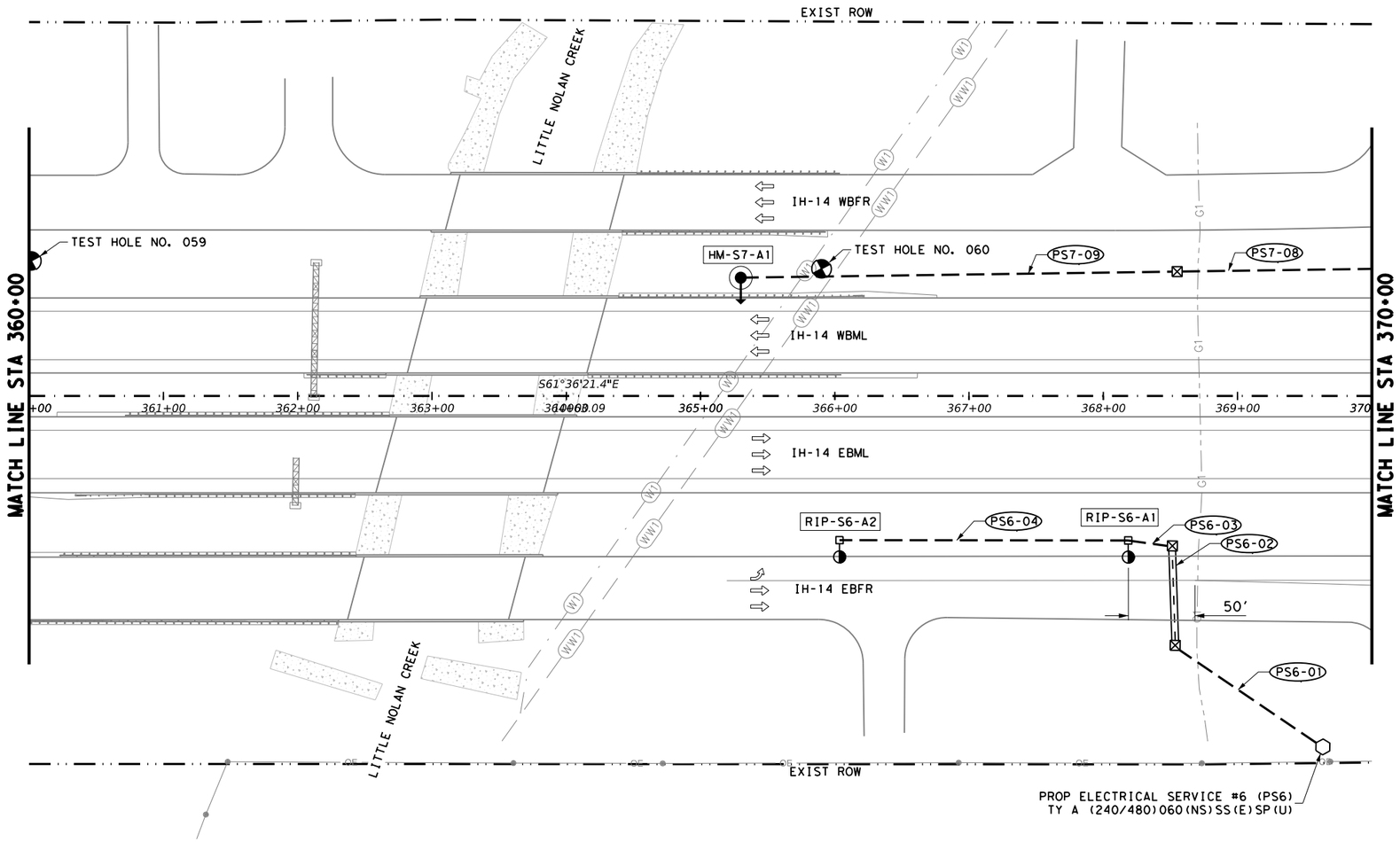

LEGEND

- EXIST GROUND BOX (TY A)
- PROP GROUND BOX (TY D W/ APRON)
- EXIST CONDUIT (TRENCHED)
- EXIST CONDUIT (BORED)
- PROP CONDUIT (TRENCHED)
- EXIST CONDUIT (BORED)
- RDWY ILLUM ASSEM (TRANS)
- RDWY ILLUM ASSEM (SHOE/BRIDGE)
- PROP HIGH MAST ILLUM POLE W/ GB
- EXIST RDWY ILLUM ASSEM (TRANS)
- EXIST/PROP ELEC SERVICE
- (1) RETROFIT GROUND BOX LID
- (2) GROUND BOX (PREPARE)

POLE DESIGNATION

HM-S#-A#
- POLE #
- CIRCUIT #
- SERVICE #

CONDUIT DESIGNATION

ES#-##
- RUN #
- SERVICE #
- E - EXIST CONDUIT
- P - PROP CONDUIT

N

CONDUIT AND CONDUCTOR RUNS

RUN NAME	SERVICE	CIRCUITS	RUN LENGTH	CONDUIT			EQUIPMENT GROUNDING CONDUCTOR	ELECTRICAL CONDUCTOR
				0618	0618	0618	6071	6071
				7036	7061	7090	6003	6003
				CONDT (PVC) (SCH 40) (3")	CONDT (PVC) (SCH 80)	CONDUIT (PREPARE)	ALUMINUM ELECTRICAL COND (#6 XHHW)	ALUMINUM ELECTRICAL COND (#6 XHHW)
				LF	LF	LF	LF	LF
PS6-01	PS6	A	133	133			133	266
PS6-02	PS6	A	74		74		74	148
PS6-03	PS6	A	33	33			33	66
PS6-04	PS6	A	215	215			215	430
PS7-08	PS7	A	145	145			145	290
PS7-09	PS7	A	325	325			325	650
			SHEET TOTAL:	851	74		925	1850

SUMMARY OF ILLUMINATION ITEMS

BID CODE		DESCRIPTION	UNIT	QTY
416	7035	DRILL SHAFT (HIGH MAST POLE) (48 IN)	LF	25
416	7040	DRILL SHAFT (RDWY ILL POLE) (30 IN)	LF	20
432	7001	RIPRAP (CONC)(4 IN)	CY	2.33
610	7124	IN RD IL (TY SA) 40T-8 (250W EQ) LED	EA	2
618	7036	CONDT (PVC) (SCH 40) (3")	LF	851
618	7061	CONDT (PVC) (SCH 80) (3") (BORE)	LF	
618	7090	CONDUIT (PREPARE)	LF	
624	7014	INSTL GROUND BOX (W/SECURE LID)	EA	4
624	7015	RETRO GROUND BOX (W/SECURE LID)	EA	
628	7049	ELC SRV TY A 240/480 060(NS)SS(E)SP(U)	EA	1
690	7218	REPLACE FUSE	EA	
690	7220	REPLACE BREAKAWAY FUSE HOLDER	EA	
6027	6003	CONDUIT (PREPARE)	LF	
6013	7006	GROUND BOX (PREPARE)	EA	
6071	7001	ALUMINUM ELECTRICAL COND (#4 XHHW)	LF	
6071	7003	ALUMINUM ELECTRICAL COND (#6 XHHW)	LF	2775
6071	7004	ALUMINUM ELECTRICAL COND (#8 XHHW)	LF	
6083	7001	LED HI MST(100 FT)(80MPH)(6FIXT)(TY B)	EA	1
6083	7002	LED HI MST(100 FT)(80MPH)(6FIXT)(TY B)(SHLD)	EA	

ILLUMINATION ASSEMBLY SUMMARY

POLE	LOCATION		ASSEMBLY TYPE	FOUNDATION DIAMETER	FOUNDATION LENGTH (FT) *
	STATION	OFFSET (FT)			
HM-S7-A1	365+30	88 LT	(100 FT)(80MPH)(6FIXT)(TY B)	48	25
RIP-S6-A2	366+04	SEE RID(2)-20	(TY SA)40T-8(250W EQ)LED	30	10
RIP-S6-A1	368+19	SEE RID(2)-20	(TY SA)40T-8(250W EQ)LED	30	10

* INCLUDES 3 FEET EXPOSURE FOR HIGH MAST

INTERIM REVIEW

THIS DOCUMENT IS RELEASED FOR THE PURPOSE OF INTERIM REVIEW UNDER THE AUTHORITY OF

PATRICK JALUFKA P.E., ON: 7/11/2025

IT IS NOT TO BE USED FOR CONSTRUCTION

PRELIMINARY NOT FOR CONSTRUCTION

© 2026 Texas Department of Transportation

ILLUMINATION LAYOUT

SCALE: 1" = 100' HORIZ. (0 25 50 100 FEET)

SHEET 13 OF 20

CHANGE ORDER	FED. RD. DIV. NO.	CONT	SECT	JOB	HIGHWAY
	6	0231	03	156	IH-14
	STATE	DIST	COUNTY		SHEET NO.
	TEXAS	WACO	BELL		97

c:\txdot\pw*online\txdot3\patrick.jalufka\d0785500\illumination Layout (WAC) V2.dgn 7/11/2025 4:38:05 PM NODE

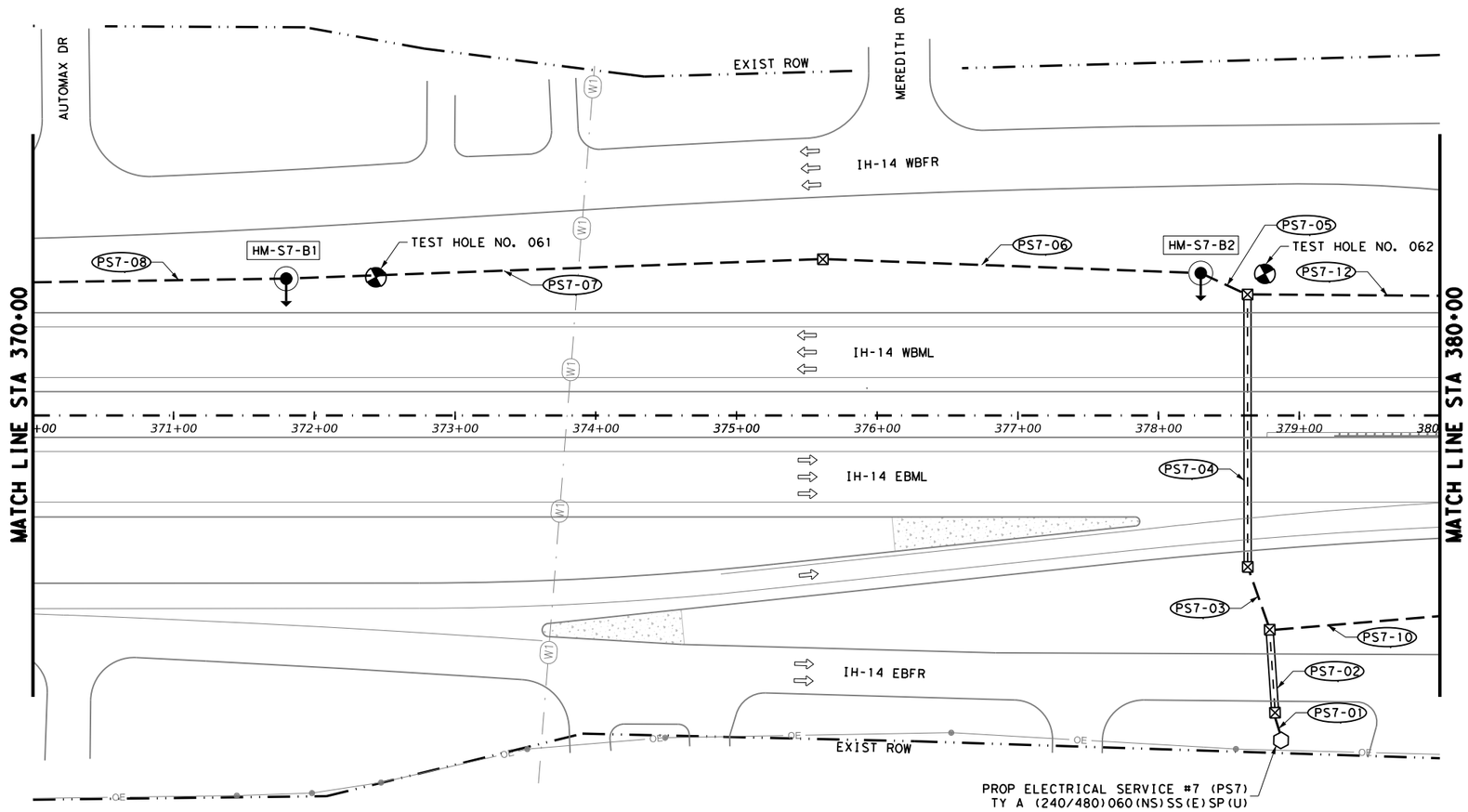

LEGEND

- EXIST GROUND BOX (TY A)
- PROP GROUND BOX (TY D W/ APRON)
- EXIST CONDUIT (TRENCHED)
- EXIST CONDUIT (BORED)
- PROP CONDUIT (TRENCHED)
- EXIST CONDUIT (BORED)
- RDWY ILLUM ASSEM (TRANS)
- RDWY ILLUM ASSEM (SHOE/BRIDGE)
- PROP HIGH MAST ILLUM POLE W/ GB
- EXIST RDWY ILLUM ASSEM (TRANS)
- EXIST/PROP ELEC SERVICE
- (1) RETROFIT GROUND BOX LID
- (2) GROUND BOX (PREPARE)

POLE DESIGNATION

HM-S#-A#
- POLE #
- CIRCUIT #
- SERVICE #

CONDUIT DESIGNATION

ES#-##
- RUN #
- SERVICE #
- E - EXIST CONDUIT
- P - PROP CONDUIT

N

CONDUIT AND CONDUCTOR RUNS

RUN NAME	SERVICE	CIRCUITS	RUN LENGTH	CONDUIT			EQUIPMENT GROUNDING CONDUCTOR	ELECTRICAL CONDUCTOR
				0618	0618	0618	6071	6071
				7036	7061	7090	6003	6003
				CONDT (PVC) (SCH 40) (3")	CONDT (PVC) (SCH 80)	CONDUIT (PREPARE)	ALUMINUM ELECTRICAL COND (#6 XHHW)	ALUMINUM ELECTRICAL COND (#6 XHHW)
				LF	LF	LF	LF	LF
PS7-01	PS7	ABCD	20	20			20	160
PS7-02	PS7	ABCD	59		59		59	472
PS7-03	PS7	ABD	47	47			47	282
PS7-04	PS7	ABD	194		194		194	1164
PS7-05	PS7	AB	37	37			37	148
PS7-06	PS7	AB	269	269			269	1076
PS7-07	PS7	AB	382	382			382	1528
PS7-08	PS7	A	180	180			180	360
PS7-10	PS7	C	121	121			121	242
PS7-12	PS7	D	137	137			137	274
SHEET TOTAL:				1193	253		1446	5706

SUMMARY OF ILLUMINATION ITEMS

BID CODE		DESCRIPTION	UNIT	QTY
416	7035	DRILL SHAFT (HIGH MAST POLE) (48 IN)	LF	43
432	7001	RIPRAP (CONC)(4 IN)	CY	4.66
618	7036	CONDT (PVC) (SCH 40) (3")	LF	1193
624	7014	INSTL GROUND BOX (W/SECURE LID)	EA	7
628	7049	ELC SRV TY A 240/480 060(NS)SS(E)SP(U)	EA	1
6071	7003	ALUMINUM ELECTRICAL COND (#6 XHHW)	LF	7152
6083	7001	LED HI MST(100 FT)(80MPH)(6FIXT)(TY B)	EA	2

ILLUMINATION ASSEMBLY SUMMARY

POLE	LOCATION		ASSEMBLY TYPE	FOUNDATION DIAMETER	FOUNDATION LENGTH (FT) *
	STATION	OFFSET (FT)			
HM-S7-B1	371+80	97 LT	(100 FT)(80MPH)(6FIXT)(TY B)	48	25
HM-S7-B2	378+30	101 LT	(100 FT)(80MPH)(6FIXT)(TY B)	48	18

* INCLUDES 3 FEET EXPOSURE

INTERIM REVIEW

THIS DOCUMENT IS RELEASED FOR THE PURPOSE OF INTERIM REVIEW UNDER THE AUTHORITY OF

PATRICK JALUFKA P.E., ON: 7/8/2025

IT IS NOT TO BE USED FOR CONSTRUCTION

PRELIMINARY NOT FOR CONSTRUCTION

© 2026 Texas Department of Transportation

ILLUMINATION LAYOUT

SCALE: 0 25 50 100 FEET
1" = 100' HORIZ.

SHEET 14 OF 20

CHANGE ORDER	FED. RD. DIV. NO.	CONT	SECT	JOB	HIGHWAY
	6	0231	03	156	IH-14
	STATE	DIST	COUNTY		SHEET NO.
	TEXAS	WACO	BELL		98

c:\txdot\pw*online*txdot3\patrick.jalufka\d0785500\illumination Layout (WAC) V2.dgn 7/11/2025 4:38:07 PM
NODE

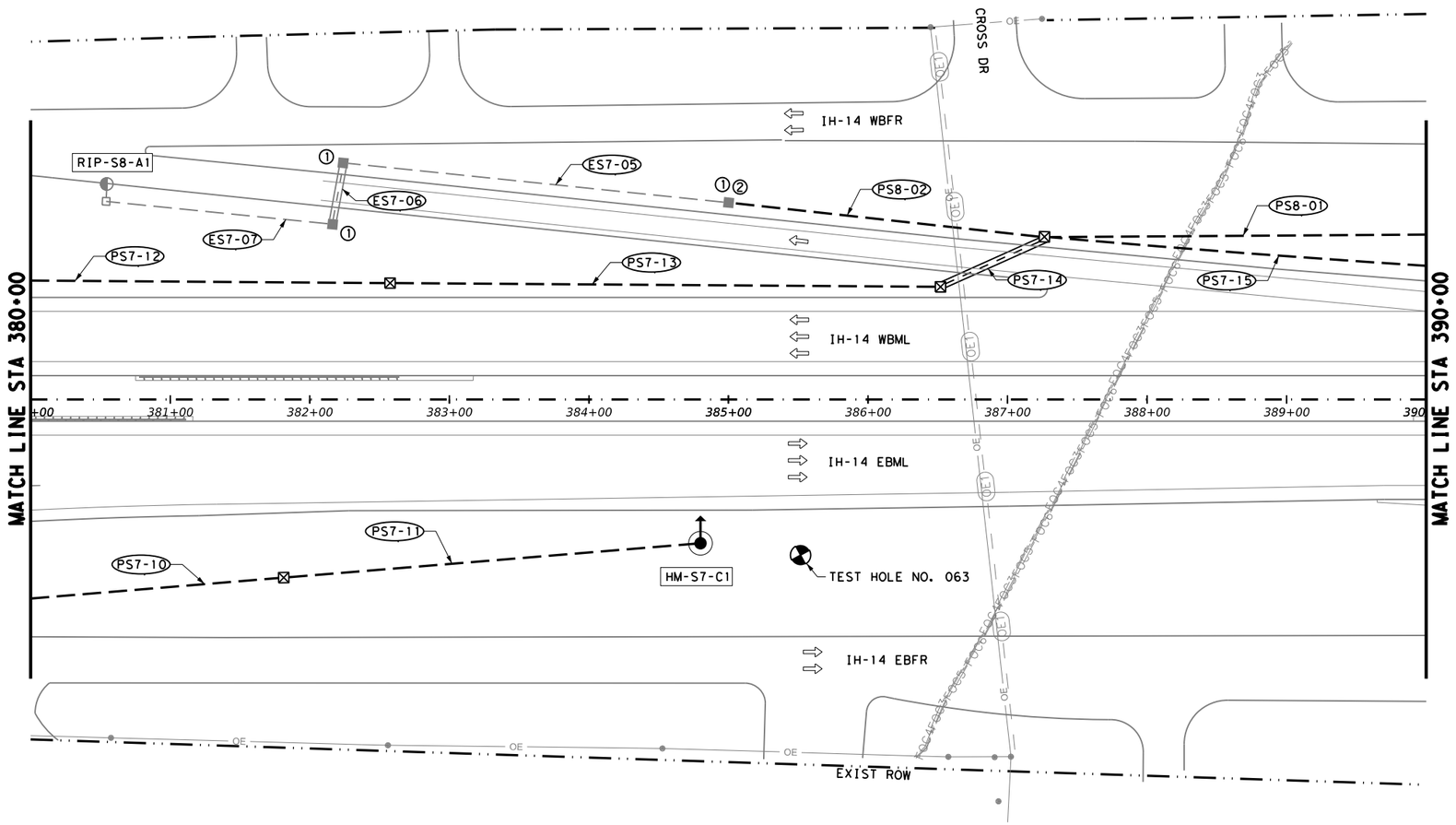

LEGEND

- EXIST GROUND BOX (TY A)
- PROP GROUND BOX (TY D W/ APRON)
- EXIST CONDUIT (TRENCHED)
- EXIST CONDUIT (BORED)
- PROP CONDUIT (TRENCHED)
- EXIST CONDUIT (BORED)
- RDWY ILLUM ASSEM (TRANS)
- RDWY ILLUM ASSEM (SHOE/BRIDGE)
- PROP HIGH MAST ILLUM POLE W/ GB
- EXIST RDWY ILLUM ASSEM (TRANS)
- EXIST/PROP ELEC SERVICE
- (1) RETROFIT GROUND BOX LID
- (2) GROUND BOX (PREPARE)

POLE DESIGNATION

HM-S#-A#
- POLE #
- CIRCUIT #
- SERVICE #

CONDUIT DESIGNATION

ES#-##
- RUN #
- SERVICE #
- E - EXIST CONDUIT
- P - PROP CONDUIT

N

CONDUIT AND CONDUCTOR RUNS

RUN NAME	SERVICE	CIRCUITS	RUN LENGTH	CONDUIT			EQUIPMENT GROUNDING CONDUCTOR	ELECTRICAL CONDUCTOR
				0618	0618	0618	6071	6071
				7036	7061	7090	6003	6003
				CONDT (PVC) (SCH 40) (3")	CONDT (PVC) (SCH 80)	CONDUIT (PREPARE)	ALUMINUM ELECTRICAL COND (#6 XHHW)	ALUMINUM ELECTRICAL COND (#6 XHHW)
				LF	LF	LF	LF	LF
PS7-10	PS7	C	182	182			182	364
PS7-11	PS7	C	300	300			300	600
PS7-12	PS7	D	258	258			258	516
PS7-13	PS7	D	394	394			394	788
PS7-14	PS7	D	83		83		83	166
PS7-15	PS7	D	274	274			274	548
PS8-01	PS8	A	274	274			274	548
PS8-02	PS8	A	228	228			228	456
ES7-05	PS8	A	278	SPLICE EXISTING TO PROPOSED				
ES7-06	PS8	A	45	NO WORK				
ES7-07	PS8	A	163	NO WORK				
SHEET TOTAL:				1910	83		1993	3986

SUMMARY OF ILLUMINATION ITEMS

BID CODE		DESCRIPTION	UNIT	QTY
416	7035	DRILL SHAFT (HIGH MAST POLE) (48 IN)	LF	15
432	7001	RIPRAP (CONC)(4 IN)	CY	2.33
618	7036	CONDT (PVC) (SCH 40) (3")	LF	1910
624	7014	INSTL GROUND BOX (W/SECURE LID)	EA	5
624	7015	RETRO GROUND BOX (W/SECURE LID)	EA	3
6013	7006	GROUND BOX (PREPARE)	EA	1
6071	7003	ALUMINUM ELECTRICAL COND (#6 XHHW)	LF	5979
6083	7001	LED HI MST(100 FT)(80MPH)(6FIXT)(TY B)	EA	1

ILLUMINATION ASSEMBLY SUMMARY

POLE	LOCATION		ASSEMBLY TYPE	FOUNDATION DIAMETER	FOUNDATION LENGTH (FT) *
	STATION	OFFSET (FT)			
HM-S7-C1	384+80	103 RT	(100 FT)(80MPH)(6FIXT)(TY B)	48	15

* INCLUDES 3 FEET EXPOSURE

INTERIM REVIEW

THIS DOCUMENT IS RELEASED FOR THE PURPOSE OF INTERIM REVIEW UNDER THE AUTHORITY OF

PATRICK JALUFKA P.E., ON: 7/11/2025

IT IS NOT TO BE USED FOR CONSTRUCTION

PRELIMINARY NOT FOR CONSTRUCTION

© 2026 Texas Department of Transportation

ILLUMINATION LAYOUT

SCALE: 1" = 100' HORIZ. (0 25 50 100 FEET)

SHEET 15 OF 20

CHANGE ORDER	FED. RD. DIV. NO.	CONT	SECT	JOB	HIGHWAY
	6	0231	03	156	IH-14
	STATE	DIST	COUNTY		SHEET NO.
	TEXAS	WACO	BELL		99

c:\txdot\pw*online\txdot3\patrick.jalufka\d0785500\Illumination Layout (WAC) V2.dgn 7/11/2025 4:38:08 PM
NODE

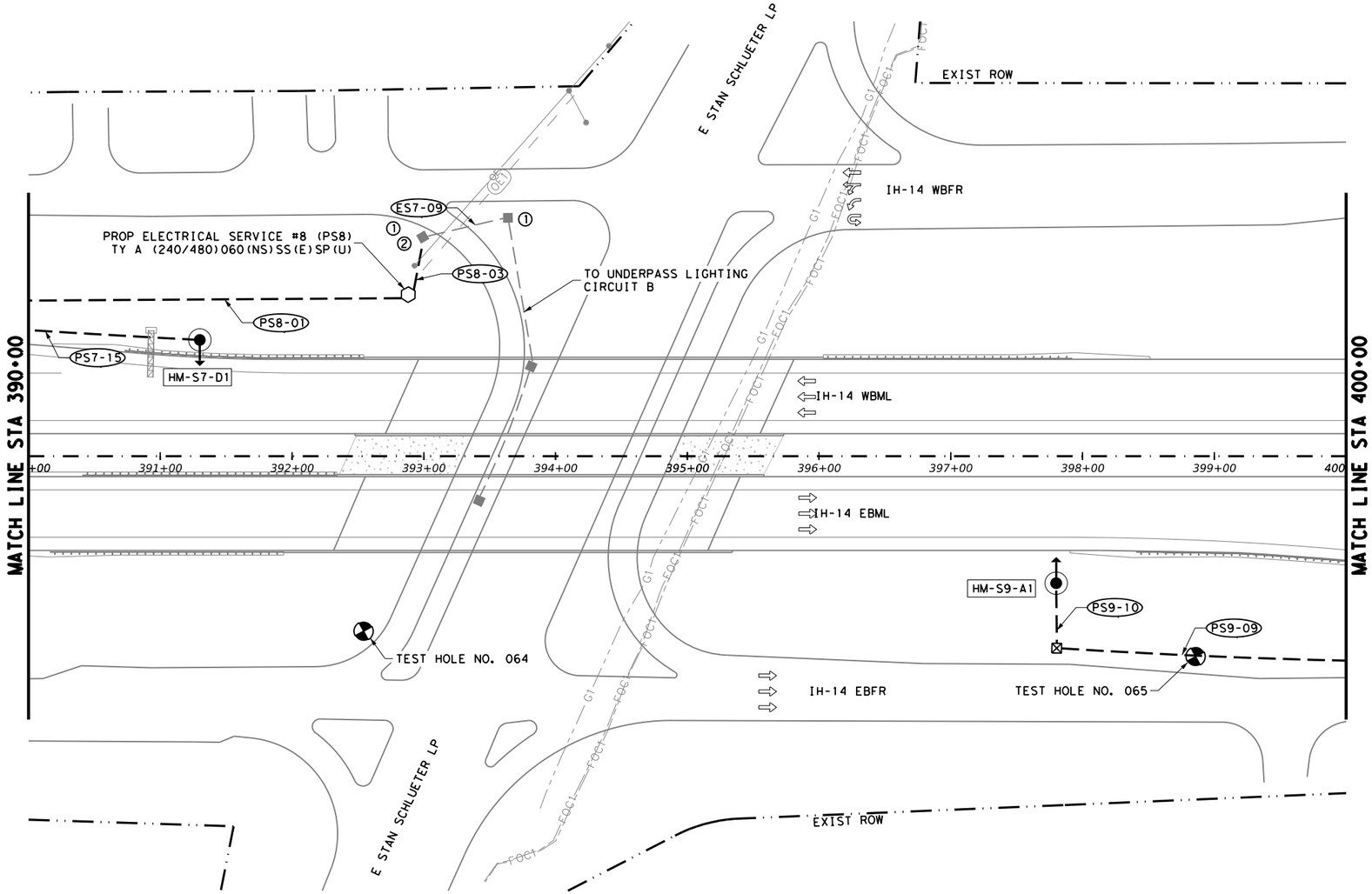

LEGEND

- EXIST GROUND BOX (TY A)
- PROP GROUND BOX (TY D W/ APRON)
- EXIST CONDUIT (TRENCHED)
- EXIST CONDUIT (BORED)
- PROP CONDUIT (TRENCHED)
- EXIST CONDUIT (BORED)
- RDWY ILLUM ASSEM (TRANS)
- RDWY ILLUM ASSEM (SHOE/BRIDGE)
- PROP HIGH MAST ILLUM POLE W/ GB
- EXIST RDWY ILLUM ASSEM (TRANS)
- EXIST/PROP ELEC SERVICE
- (1) RETROFIT GROUND BOX LID
- (2) GROUND BOX (PREPARE)

POLE DESIGNATION

HM-S#-A#
- POLE #
- CIRCUIT #
- SERVICE #

CONDUIT DESIGNATION

ES#-##
- RUN #
- SERVICE #
- E - EXIST CONDUIT
- P - PROP CONDUIT

N

CONDUIT AND CONDUCTOR RUNS								
RUN NAME	SERVICE	CIRCUITS	RUN LENGTH	CONDUIT			EQUIPMENT GROUNDING CONDUCTOR	ELECTRICAL CONDUCTOR
				0618	0618	0618	6071	6071
				7036	7061	7090	6003	6003
				CONDT (PVC) (SCH 40) (3")	CONDT (PVC) (SCH 80)	CONDUIT (PREPARE)	ALUMINUM ELECTRICAL COND (#6 XHHW)	ALUMINUM ELECTRICAL COND (#6 XHHW)
				LF	LF	LF	LF	LF
PS7-15	PS7	D	130	130			130	260
PS8-01	PS8	A	288	288			288	576
PS8-03	PS8	B	45	45			45	90
ES7-09	PS8	B	66	SPLICE EXISTING TO PROPOSED				
PS9-09	PS9	A	220	220			220	440
PS9-10	PS9	A	49	49			49	98
SHEET TOTAL:				732			732	1464

SUMMARY OF ILLUMINATION ITEMS			
BID CODE	DESCRIPTION	UNIT	QTY
416 7035	DRILL SHAFT (HIGH MAST POLE) (48 IN)	LF	50
432 7001	RIPRAP (CONC)(4 IN)	CY	4.66
618 7036	CONDT (PVC) (SCH 40) (3")	LF	732
624 7014	INSTL GROUND BOX (W/SECURE LID)	EA	3
624 7015	RETRO GROUND BOX (W/SECURE LID)	EA	2
628 7049	ELC SRV TY A 240/480 060(NS)SS(E)SP(U)	EA	1
6013 7006	GROUND BOX (PREPARE)	EA	1
6071 7003	ALUMINUM ELECTRICAL COND (#6 XHHW)	LF	2196
6083 7001	LED HI MST(100 FT)(80MPH)(6FIXT)(TY B)	EA	2

ILLUMINATION ASSEMBLY SUMMARY					
POLE	LOCATION		ASSEMBLY TYPE	FOUNDATION DIAMETER	FOUNDATION LENGTH (FT) *
	STATION	OFFSET (FT)			
HM-S7-D1	391+30	88 LT	(100 FT)(80MPH)(6FIXT)(TY B)	48	25
HM-S9-A1	397+80	96 RT	(100 FT)(80MPH)(6FIXT)(TY B)	48	25

* INCLUDES 3 FEET EXPOSURE

INTERIM REVIEW

THIS DOCUMENT IS RELEASED FOR THE PURPOSE OF INTERIM REVIEW UNDER THE AUTHORITY OF

PATRICK JALUFKA P.E., ON: 7/11/2025

IT IS NOT TO BE USED FOR CONSTRUCTION

PRELIMINARY NOT FOR CONSTRUCTION

© 2026 Texas Department of Transportation

ILLUMINATION LAYOUT

SCALE: 0 25 50 100 FEET
1" = 100' HORIZ.

SHEET 16 OF 20

CHANGE ORDER	FED. RD. DIV. NO.	CONT	SECT	JOB	HIGHWAY
	6	0231	03	156	IH-14
	STATE	DIST	COUNTY		SHEET NO.
	TEXAS	WACO	BELL		100

c:*xdot\pw*online*txdot3\patrick.jalufka\d0785500\Illumination Layout (WAC) V2.dgn 7/11/2025 4:38:09 PM
NODE

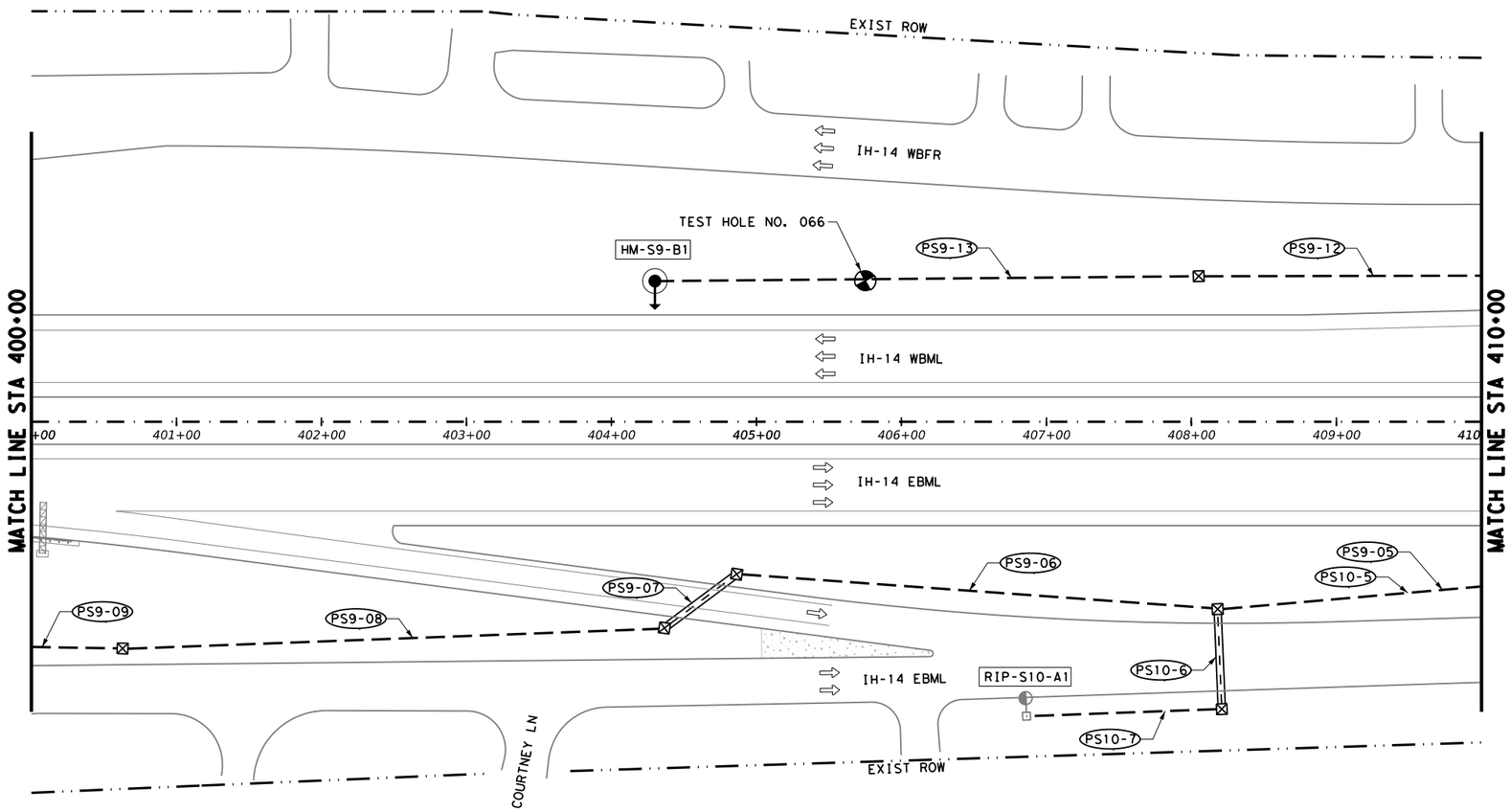

LEGEND

- EXIST GROUND BOX (TY A)
- PROP GROUND BOX (TY D W/ APRON)
- EXIST CONDUIT (TRENCHED)
- EXIST CONDUIT (BORED)
- PROP CONDUIT (TRENCHED)
- EXIST CONDUIT (BORED)
- RDWY ILLUM ASSEM (TRANS)
- RDWY ILLUM ASSEM (SHOE/BRIDGE)
- PROP HIGH MAST ILLUM POLE W/ GB
- EXIST RDWY ILLUM ASSEM (TRANS)
- EXIST/PROP ELEC SERVICE
- (1) RETROFIT GROUND BOX LID
- (2) GROUND BOX (PREPARE)

POLE DESIGNATION

HM-S#-A#
- POLE #
- CIRCUIT #
- SERVICE #

CONDUIT DESIGNATION

ES#-##
- RUN #
- SERVICE #
- E - EXIST CONDUIT
- P - PROP CONDUIT

N

CONDUIT AND CONDUCTOR RUNS

RUN NAME	SERVICE	CIRCUITS	RUN LENGTH	CONDUIT			EQUIPMENT GROUNDING CONDUCTOR	ELECTRICAL CONDUCTOR
				0618	0618	0618	6071	6071
				7036	7061	7090	6003	6003
				CONDT (PVC) (SCH 40) (3")	CONDT (PVC) (SCH 80)	CONDUIT (PREPARE)	ALUMINUM ELECTRICAL COND (#6 XHHW)	ALUMINUM ELECTRICAL COND (#6 XHHW)
				LF	LF	LF	LF	LF
PS9-05	PS9	A	183	183			183	366
PS9-06	PS9	A	332	332			332	664
PS9-07	PS9	A	62		62		62	124
PS9-08	PS9	A	374	374			374	748
PS9-09	PS9	A	63	63			63	126
PS9-12	PS9	B	195	195			195	390
PS9-13	PS9	B	375	375			375	750
PS10-5	PS10	A	183	183			183	366
PS10-6	PS10	A	69		69		69	138
PS10-7	PS10	A	135	135			135	270
SHEET TOTAL:				1840	131		1971	3942

SUMMARY OF ILLUMINATION ITEMS

BID CODE		DESCRIPTION	UNIT	QTY
416	7035	DRILL SHAFT (HIGH MAST POLE) (48 IN)	LF	18
432	7001	RIPRAP (CONC)(4 IN)	CY	2.33
618	7036	CONDT (PVC) (SCH 40) (3")	LF	1840
624	7014	INSTL GROUND BOX (W/SECURE LID)	EA	7
6071	7003	ALUMINUM ELECTRICAL COND (#6 XHHW)	LF	5913
6083	7001	LED HI MST(100 FT)(80MPH)(6FIXT)(TY B)	EA	1

ILLUMINATION ASSEMBLY SUMMARY

POLE	LOCATION		ASSEMBLY TYPE	FOUNDATION DIAMETER	FOUNDATION LENGTH (FT) *
	STATION	OFFSET (FT)			
HM-S9-B1	404+30	97 LT	(100 FT)(80MPH)(6FIXT)(TY B)	48	18

* INCLUDES 3 FEET EXPOSURE

INTERIM REVIEW

THIS DOCUMENT IS RELEASED FOR THE PURPOSE OF INTERIM REVIEW UNDER THE AUTHORITY OF

PATRICK JALUFKA P.E., ON: 7/11/2025

IT IS NOT TO BE USED FOR CONSTRUCTION

PRELIMINARY NOT FOR CONSTRUCTION

© 2026 Texas Department of Transportation

ILLUMINATION LAYOUT

SCALE: 1" = 100' HORIZ. (0 25 50 100 FEET)

SHEET 17 OF 20

CHANGE ORDER	FED. RD. DIV. NO.	CONT	SECT	JOB	HIGHWAY
	6	0231	03	156	IH-14
	STATE	DIST	COUNTY		SHEET NO.
	TEXAS	WACO	BELL		101

c:\txdot\pwonline\txdot3\patrick.jalufka\d0785500\illumination Layout (WAC) V2.dgn 7/11/2025 4:38:10 PM
NODE

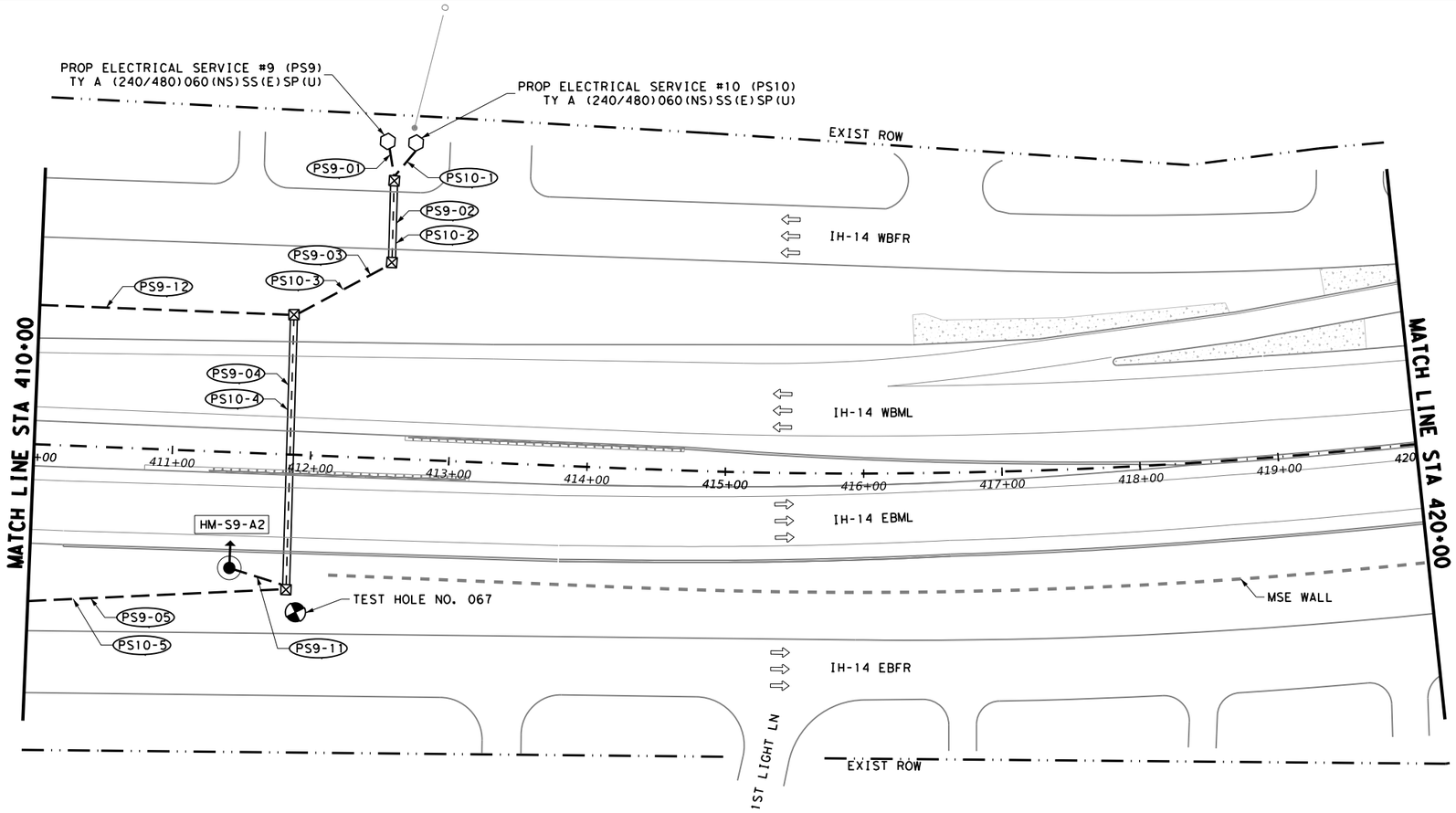

LEGEND

- EXIST GROUND BOX (TY A)
- PROP GROUND BOX (TY D W/ APRON)
- EXIST CONDUIT (TRENCHED)
- EXIST CONDUIT (BORED)
- PROP CONDUIT (TRENCHED)
- EXIST CONDUIT (BORED)
- RDWY ILLUM ASSEM (TRANS)
- RDWY ILLUM ASSEM (SHOE/BRIDGE)
- PROP HIGH MAST ILLUM POLE W/ GB
- EXIST RDWY ILLUM ASSEM (TRANS)
- EXIST/PROP ELEC SERVICE
- (1) RETROFIT GROUND BOX LID
- (2) GROUND BOX (PREPARE)

POLE DESIGNATION

HM-S#-A#
- POLE #
- CIRCUIT #
- SERVICE #

CONDUIT DESIGNATION

ES#-##
- RUN #
- SERVICE #
- E - EXIST CONDUIT
- P - PROP CONDUIT

CONDUIT AND CONDUCTOR RUNS

RUN NAME	SERVICE	CIRCUITS	RUN LENGTH	CONDUIT			EQUIPMENT GROUNDING CONDUCTOR	ELECTRICAL CONDUCTOR
				0618	0618	0618	6071	6071
				7036	7061	7090	6003	6003
				CONDT (PVC) (SCH 40) (3")	CONDT (PVC) (SCH 80)	CONDUIT (PREPARE)	ALUMINUM ELECTRICAL COND (#6 XHHW)	ALUMINUM ELECTRICAL COND (#6 XHHW)
				LF	LF	LF	LF	LF
PS9-01	PS9	AB	29	29			29	116
PS9-02	PS9	AB	59		59		59	236
PS9-03	PS9	AB	80	80			80	320
PS9-04	PS9	A	199		199		199	398
PS9-05	PS9	A	187	187			187	374
PS9-11	PS9	A	44	44			44	88
PS9-12	PS9	B	184	184			184	368
PS10-1	PS10	A	29	29			29	58
PS10-2	PS10	A	59		59		59	118
PS10-3	PS10	A	80	80			80	160
PS10-4	PS10	A	199		199		199	398
PS10-5	PS10	A	187	187			187	374
SHEET TOTAL:				820	516		1336	3008

ILLUMINATION ASSEMBLY SUMMARY

BID CODE		DESCRIPTION	UNIT	QTY
416	7035	DRILL SHAFT (HIGH MAST POLE) (48 IN)	LF	18
432	7001	RIPRAP (CONC)(4 IN)	CY	2.33
618	7036	CONDT (PVC) (SCH 40) (3")	LF	820
624	7014	INSTL GROUND BOX (W/SECURE LID)	EA	5
628	7049	ELC SRV TY A 240/480 060(NS)SS(E)SP(U)	EA	2
6071	7003	ALUMINUM ELECTRICAL COND (#6 XHHW)	LF	4344
6083	7001	LED HI MST(100 FT)(80MPH)(6FIXT)(TY B)	EA	1

HIGH MAST ILLUMINATION SUMMARY

POLE	LOCATION		ASSEMBLY TYPE	FOUNDATION DIAMETER	FOUNDATION LENGTH (FT) *
	STATION	OFFSET (FT)			
HM-S9-A2	411+45	84 RT	(100 FT)(80MPH)(6FIXT)(TY B)	48	18

* INCLUDES 3 FEET EXPOSURE

INTERIM REVIEW
THIS DOCUMENT IS RELEASED FOR THE PURPOSE OF INTERIM REVIEW UNDER THE AUTHORITY OF
PATRICK JALUFKA P.E., ON: 7/11/2025
IT IS NOT TO BE USED FOR CONSTRUCTION

PRELIMINARY NOT FOR CONSTRUCTION

© 2026 Texas Department of Transportation

ILLUMINATION LAYOUT

SCALE: 1" = 100' HORIZ. (0 25 50 100 FEET)

SHEET 18 OF 20

CHANGE ORDER	FED. RD. DIV. NO.	CONT	SECT	JOB	HIGHWAY
	6	0231	03	156	IH-14
	STATE	DIST	COUNTY		SHEET NO.
	TEXAS	WACO	BELL		102

c:\txdot\pw*online*\txdot3\patrick.jalufka\d0785500\Illumination Layout (WAC) V2.dgn 7/11/2025 4:38:11 PM
NODE

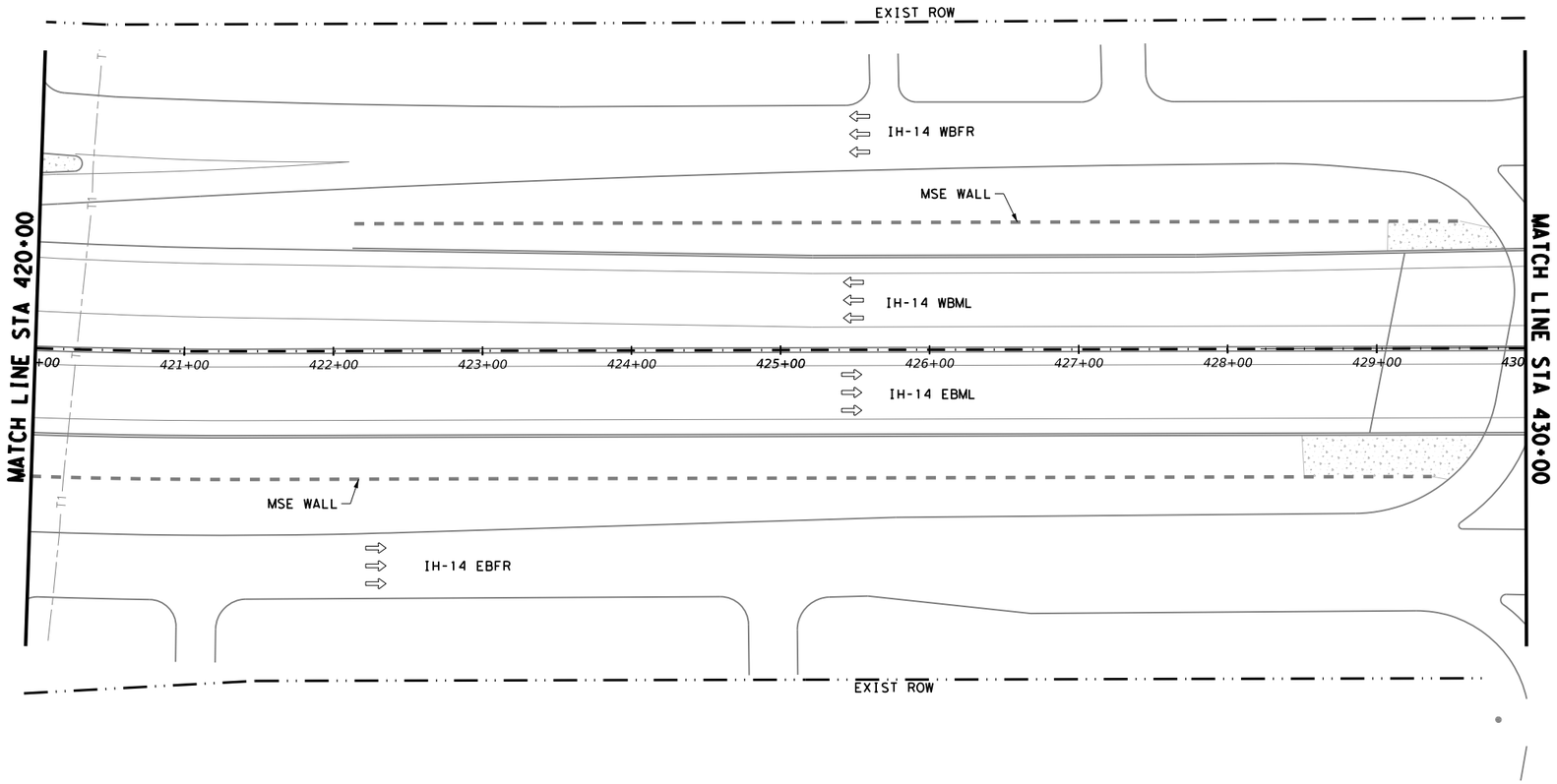

LEGEND

- EXIST GROUND BOX (TY A)
- PROP GROUND BOX (TY D W/ APRON)
- EXIST CONDUIT (TRENCHED)
- EXIST CONDUIT (BORED)
- PROP CONDUIT (TRENCHED)
- EXIST CONDUIT (BORED)
- RDWY ILLUM ASSEM (TRANS)
- RDWY ILLUM ASSEM (SHOE/BRIDGE)
- PROP HIGH MAST ILLUM POLE W/ GB
- EXIST RDWY ILLUM ASSEM (TRANS)
- EXIST/PROP ELEC SERVICE
- (1) RETROFIT GROUND BOX LID
- (2) GROUND BOX (PREPARE)

POLE DESIGNATION

HM-S#-A#
- POLE #
- CIRCUIT #
- SERVICE #

CONDUIT DESIGNATION

ES#-##
- RUN #
- SERVICE #
- E - EXIST CONDUIT
- P - PROP CONDUIT

CONDUIT AND CONDUCTOR RUNS

RUN NAME	SERVICE	CIRCUITS	RUN LENGTH	CONDUIT			EQUIPMENT GROUNDING CONDUCTOR	ELECTRICAL CONDUCTOR
				0618	0618	0618	6071	6071
				7036	7061	7090	6003	6003
				CONDT (PVC) (SCH 40) (3")	CONDT (PVC) (SCH 80)	CONDUIT (PREPARE)	ALUMINUM ELECTRICAL COND (#6 XHHW)	ALUMINUM ELECTRICAL COND (#6 XHHW)
				LF	LF	LF	LF	LF
NO WORK THIS SHEET								

INTERIM REVIEW

THIS DOCUMENT IS RELEASED FOR THE PURPOSE OF INTERIM REVIEW UNDER THE AUTHORITY OF

PATRICK JALUFKA P.E., ON: 7/11/2025

IT IS NOT TO BE USED FOR CONSTRUCTION

PRELIMINARY NOT FOR CONSTRUCTION

© 2026 Texas Department of Transportation

ILLUMINATION LAYOUT

SCALE: 1" = 100' HORIZ. (0, 25, 50, 100 FEET)

SHEET 19 OF 20

CHANGE ORDER	FED. RD. DIV. NO.	CONT	SECT	JOB	HIGHWAY
	6	0231	03	156	IH-14
	STATE	DIST	COUNTY		SHEET NO.
	TEXAS	WACO	BELL		103

c:\txdot\pwonline\txdot3\patrick.jalufka\d0785500\illumination Layout (WAC) V2.dgn 7/11/2025 4:38:12 PM
NODE

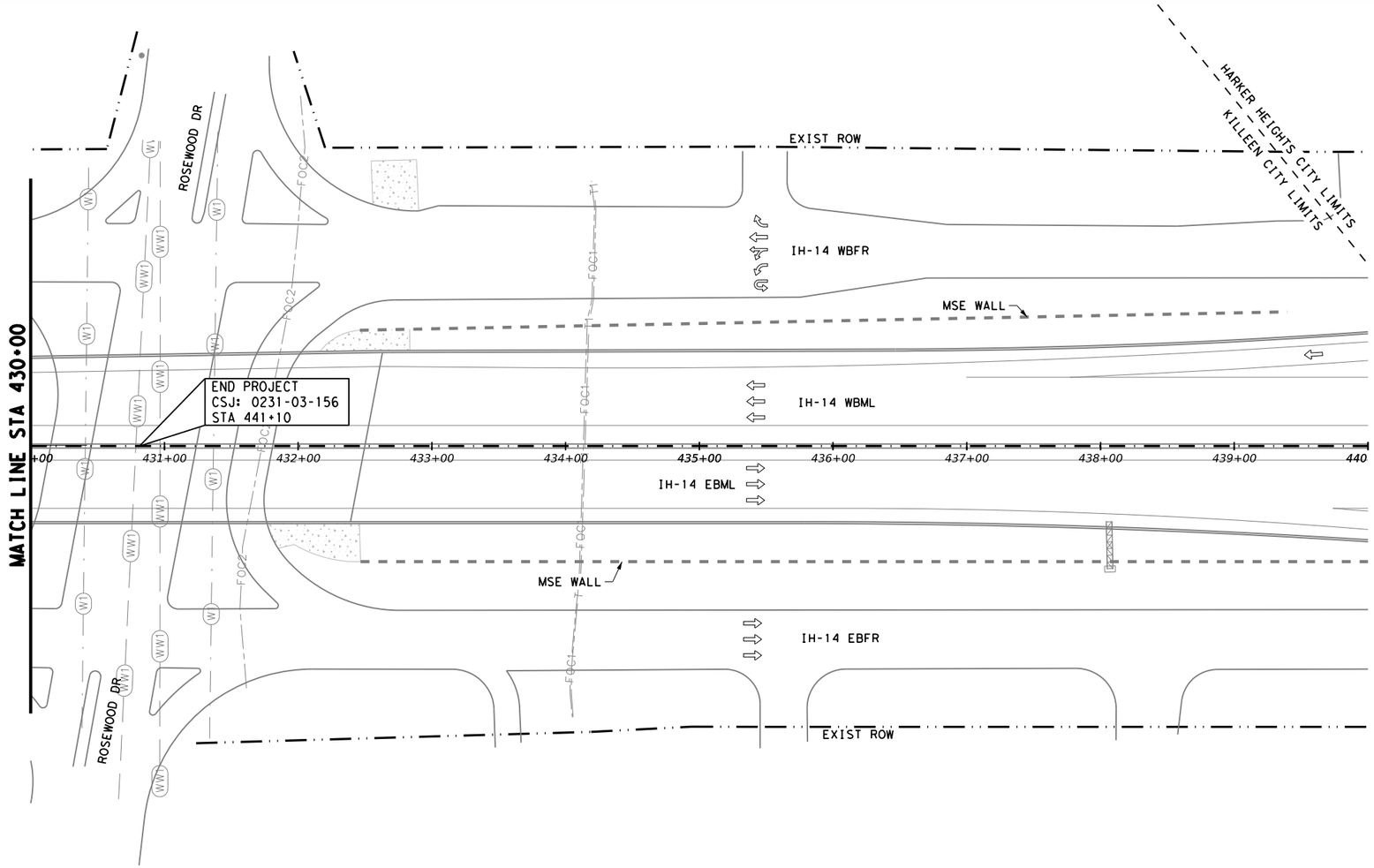

LEGEND

- EXIST GROUND BOX (TY A)
- PROP GROUND BOX (TY D W/ APRON)
- EXIST CONDUIT (TRENCHED)
- EXIST CONDUIT (BORED)
- PROP CONDUIT (TRENCHED)
- EXIST CONDUIT (BORED)
- RDWY ILLUM ASSEM (TRANS)
- RDWY ILLUM ASSEM (SHOE/BRIDGE)
- PROP HIGH MAST ILLUM POLE W/ GB
- EXIST RDWY ILLUM ASSEM (TRANS)
- EXIST/PROP ELEC SERVICE
- (1) RETROFIT GROUND BOX LID
- (2) GROUND BOX (PREPARE)

POLE DESIGNATION

HM-S#-A#
- POLE #
- CIRCUIT #
- SERVICE #

CONDUIT DESIGNATION

ES#-##
- RUN #
- SERVICE #
- E - EXIST CONDUIT
- P - PROP CONDUIT

CONDUIT AND CONDUCTOR RUNS								
RUN NAME	SERVICE	CIRCUITS	RUN LENGTH	CONDUIT			EQUIPMENT GROUNDING CONDUCTOR	ELECTRICAL CONDUCTOR
				0618	0618	0618	6071	6071
				7036	7061	7090	6003	6003
				CONDT (PVC) (SCH 40) (3")	CONDT (PVC) (SCH 80)	CONDUIT (PREPARE)	ALUMINUM ELECTRICAL COND (#6 XHHW)	ALUMINUM ELECTRICAL COND (#6 XHHW)
				LF	LF	LF	LF	LF
NO WORK THIS SHEET								

INTERIM REVIEW

THIS DOCUMENT IS RELEASED FOR THE PURPOSE OF INTERIM REVIEW UNDER THE AUTHORITY OF

PATRICK JALUFKA P.E., ON: 7/11/2025

IT IS NOT TO BE USED FOR CONSTRUCTION

PRELIMINARY NOT FOR CONSTRUCTION

© 2026 Texas Department of Transportation

ILLUMINATION LAYOUT

SCALE: 0 25 50 100 FEET
1" = 100' HORIZ.

SHEET 20 OF 20

CHANGE ORDER	FED. RD. DIV. NO.	CONT	SECT	JOB	HIGHWAY
	6	0231	03	156	IH-14
	STATE	DIST	COUNTY		SHEET NO.
	TEXAS	WACO	BELL		104

c:\txdot\pwonline\txdot3\patrick.jalufka\d0785500\Illumination Layout (WAC) V2.dgn 7/11/2025 4:38:14 PM
NODE

PROPOSED ELECTRICAL SERVICE DATA													
ELEC. SERVICE NO.	ELEC. SERVICE NAME *	SHEET NO.	ELECTRICAL SERVICE DESCRIPTION	SERVICE CONDUIT SIZE	SERVICE CONDUCTOR NO./SIZE	SAFETY SWITCH AMPS	MAIN CKT. BKR. POLES/AMPS	TWO-POLE CONTACTOR AMPS	BRANCH CIRCUIT NO.	BRANCH CKT. BKR. POLES/AMPS	BRANCH CIRCUIT AMPS	KVA LOAD
PS1	023103156 (CL) (PS1) KILLEEN	2 OF 20	ELC SRV TY A 240/480 060 (NS)SS(E)SP(U)	2"	3/#6	N/A	2P/60	60	A (HIGH MAST)	2P/30	7.5	14.4
									B (HIGH MAST)	2P/30	15	
									C (HIGH MAST)	2P/30	7.5	
PS2	023103156 (SL) (PS2)	6 OF 20	ELC SRV TY A 240/480 060 (NS)SS(E)SP(U)	2"	3/#6	N/A	2P/60	60	A (RDWY ILLUM POLE)	2P/20	1.05	0.5
PS3	023103156 (CL) (PS3) KILLEEN	6 OF 20	ELC SRV TY A 240/480 060 (NS)SS(E)SP(U)	2"	3/#6	N/A	2P/60	60	A (HIGH MAST)	2P/30	15	21.6
									B (HIGH MAST)	2P/30	7.5	
									C (HIGH MAST)	2P/30	15	
									D (HIGH MAST)	2P/30	7.5	
PS4	023103156 (CL) (PS4) KILLEEN	8 OF 20	ELC SRV TY A 240/480 060 (NS)SS(E)SP(U)	2"	3/#6	N/A	2P/60	60	A (HIGH MAST)	2P/30	7.5	10.8
									B (HIGH MAST)	2P/30	15	
PS5	023103156 (CL) (PS5) KILLEEN	11 OF 20	ELC SRV TY A 240/480 060 (NS)SS(E)SP(U)	2"	3/#6	N/A	2P/60	60	A (HIGH MAST)	2P/30	15	14.4
									B (HIGH MAST)	2P/30	15	
PS6	023103156 (SL) (PS6)	13 OF 20	ELC SRV TY A 240/480 060 (NS)SS(E)SP(U)	2"	3/#6	N/A	2P/60	60	A (RDWY ILLUM POLE)	2P/20	0.7	0.3
PS7	023103156 (CL) (PS7) KILLEEN	14 OF 20	ELC SRV TY A 240/480 060 (NS)SS(E)SP(U)	2"	3/#6	N/A	2P/60	60	A (HIGH MAST)	2P/30	7.5	10.8
									B (HIGH MAST)	2P/30	15	
									C (HIGH MAST)	2P/30	7.5	
									D (HIGH MAST)	2P/30	7.5	
PS8	023103156 (SL) (PS8)	16 OF 20	ELC SRV TY A 240/480 060 (NS)SS(E)SP(U)	2"	3/#6	N/A	2P/60	60	A (RDWY ILLUM POLE)	2P/20	0.35	1.1
									B (UNDERPASS ILLUM)	1P/20	4	
PS9	023103156 (CL) (PS9) KILLEEN	18 OF 20	ELC SRV TY A 240/480 060 (NS)SS(E)SP(U)	2"	3/#6	N/A	2P/60	60	A (HIGH MAST)	2P/30	15	10.8
									B (HIGH MAST)	2P/30	7.5	
PS10	023103156 (SL) (PS10)	18 OF 20	ELC SRV TY A 240/480 060 (NS)SS(E)SP(U)	2"	3/#6	N/A	2P/60	60	A (RDWY ILLUM POLE)	2P/30	0.35	0.2

* LABEL SERVICE WITH NAME PER DMS 11080

NEW SERVICE INFORMATION			
PROPOSED SERVICE	ADJACENT EXISTING SERVICE (EXISTING REPLACED)	SERVICE ADDRESS	ESID
PS1	NEW LOCATION	-	-
PS2	ES2	UNMETERED	
PS3	NEW LOCATION	-	-
PS4	ES4	2200 S W S YOUNG DR HLTS	10443720008015737
PS5	NEW LOCATION	-	-
PS6	NEW LOCATION	-	-
PS7	ES6	3700 E CENTRAL TEXAS EXPY SGNL	10443720009915696
PS8	ES7	4005 E CENTRAL TEXAS EXPY HLTS	10443720008015799
PS9	NEW LOCATION	-	-
PS10	ES8	UNMETERED	

EXISTING SERVICE INFORMATION (EXISTING SERVICES TO REMAIN, NO SERVICE WORK ANTICIPATED)		
EXISTING SERVICE	SERVICE ADDRESS	ESID
ES1	800 E CENTRAL TEXAS PKWY ODLT	10443720000318695
ES3	2006 E CENTRAL TEXAS PKWY ODLT	10443720000318757
ES5	3100 E CENTRAL TEXAS PKWY ODLT	10443720000318788

INTERIM REVIEW

THIS DOCUMENT IS RELEASED FOR THE PURPOSE OF INTERIM REVIEW UNDER THE AUTHORITY OF

PATRICK JALUFKA P.E., ON: 7/11/2025

IT IS NOT TO BE USED FOR CONSTRUCTION

PRELIMINARY NOT FOR CONSTRUCTION

© 2026 Texas Department of Transportation

ELECTRICAL SERVICE DATA

SHEET 1 OF 1

CHANGE ORDER	FED. RD. DIV. NO.	CONT	SECT	JOB	HIGHWAY
	6	0231	03	156	IH-14
	STATE	DIST	COUNTY		SHEET NO.
	TEXAS	WACO	BELL		105

c:\txdot\pw*online\txdot3\patrick.jalufka\d0785500\Electrical Service Data.dgn 7/11/2025 4:38:34 PM NODE

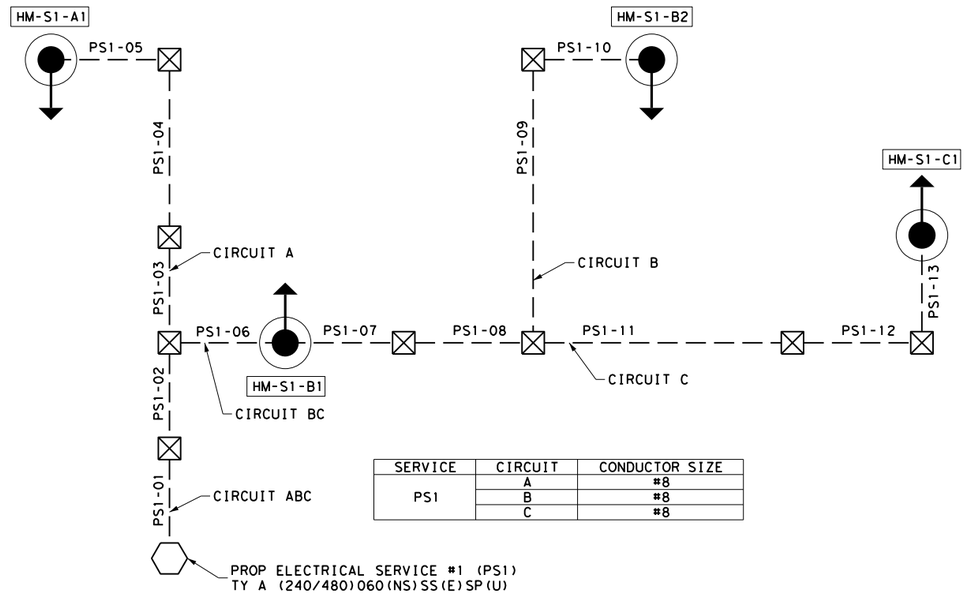

SERVICE	CIRCUIT	CONDUCTOR SIZE
PS1	A	#8
	B	#8
	C	#8

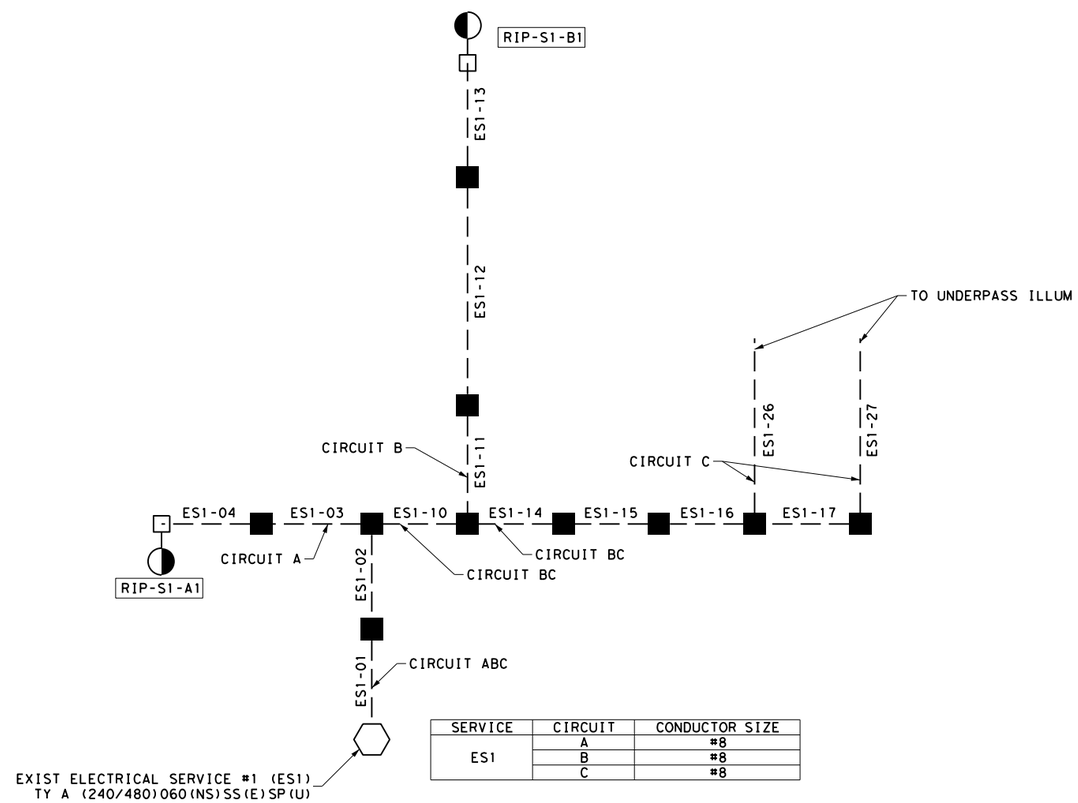

SERVICE	CIRCUIT	CONDUCTOR SIZE
ES1	A	#8
	B	#8
	C	#8

LEGEND

- GROUND BOX (TY A)
- GROUND BOX (TY D)
- CONDUIT
- RDWY ILLUM ASSEM (TRANS)
- RDWY ILLUM ASSEM (SHOE/BRIDGE)
- HIGH MAST ILLUM POLE
- ELEC SERVICE

POLE DESIGNATION

HM-S#-A#
- POLE #
- CIRCUIT #
- SERVICE #

CONDUIT DESIGNATION

ES#-##
- RUN #
- SERVICE #
- E - EXIST CONDUIT
- P - PROP CONDUIT

INTERIM REVIEW

THIS DOCUMENT IS RELEASED FOR THE PURPOSE OF INTERIM REVIEW UNDER THE AUTHORITY OF

PATRICK JALUFKA P.E., ON: 7/8/2025

IT IS NOT TO BE USED FOR CONSTRUCTION

PRELIMINARY NOT FOR CONSTRUCTION

© 2026 Texas Department of Transportation

PROPOSED ELECTRICAL SCHEMATIC

NOT TO SCALE

SHEET 1 OF 5

CHANGE ORDER	FED. RD. DIV. NO.	CONT	SECT	JOB	HIGHWAY
	6	0231	03	156	IH-14
	STATE	DIST	COUNTY		SHEET NO.
	TEXAS	WACO	BELL		106

c:\txdot\pw*online\txdot3\patrick.jalufka\d0785500\Electrical Schematic - Proposed V2.dgn 7/11/2025 4:38:48 PM
NODE

c:\txdot\pwonline\txdot3\patrick.jalufka\d0785500\Electrical Schematic - Proposed V2.dgn 7/11/2025 4:38:49 PM

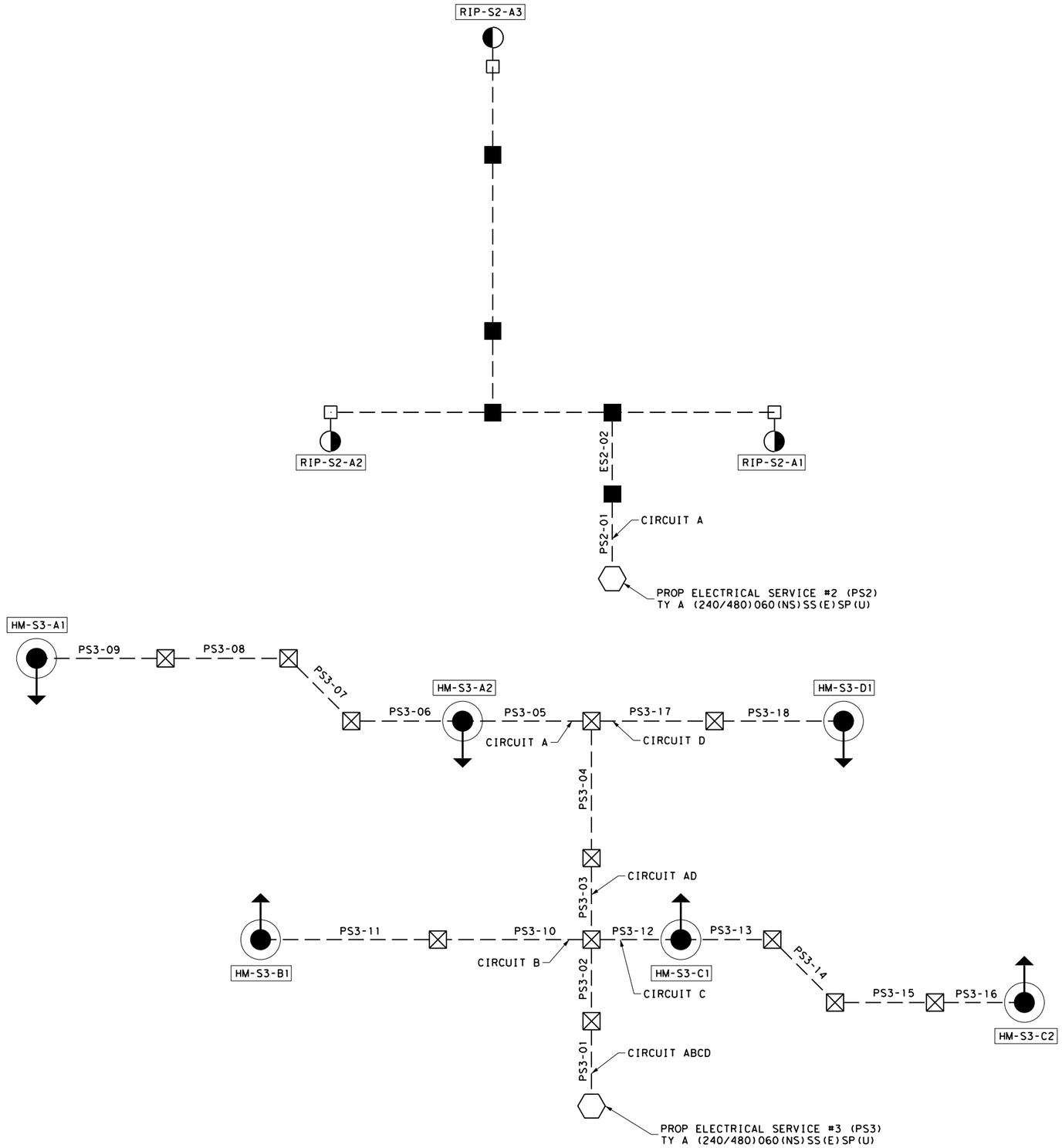

LEGEND

- GROUND BOX (TY A)
- GROUND BOX (TY D)
- CONDUIT
- RDWY ILLUM ASSEM (TRANS)
- RDWY ILLUM ASSEM (SHOE/BRIDGE)
- HIGH MAST ILLUM POLE
- ELEC SERVICE

POLE DESIGNATION

HM-S#-A#

- POLE #
- CIRCUIT #
- SERVICE #

CONDUIT DESIGNATION

ES#-##

- RUN #
- SERVICE #
- E - EXIST CONDUIT
- P - PROP CONDUIT

INTERIM REVIEW

THIS DOCUMENT IS RELEASED FOR THE PURPOSE OF INTERIM REVIEW UNDER THE AUTHORITY OF

PATRICK JALUFKA P.E., ON: 7/8/2025

IT IS NOT TO BE USED FOR CONSTRUCTION

PRELIMINARY NOT FOR CONSTRUCTION

© 2026 Texas Department of Transportation

PROPOSED ELECTRICAL SCHEMATIC

NOT TO SCALE

CHANGE ORDER	FED. RD. DIV. NO.	CONT	SECT	JOB	HIGHWAY
	6	0231	03	156	IH-14
	STATE	DIST	COUNTY		SHEET NO.
	TEXAS	WACO	BELL		107

NODE

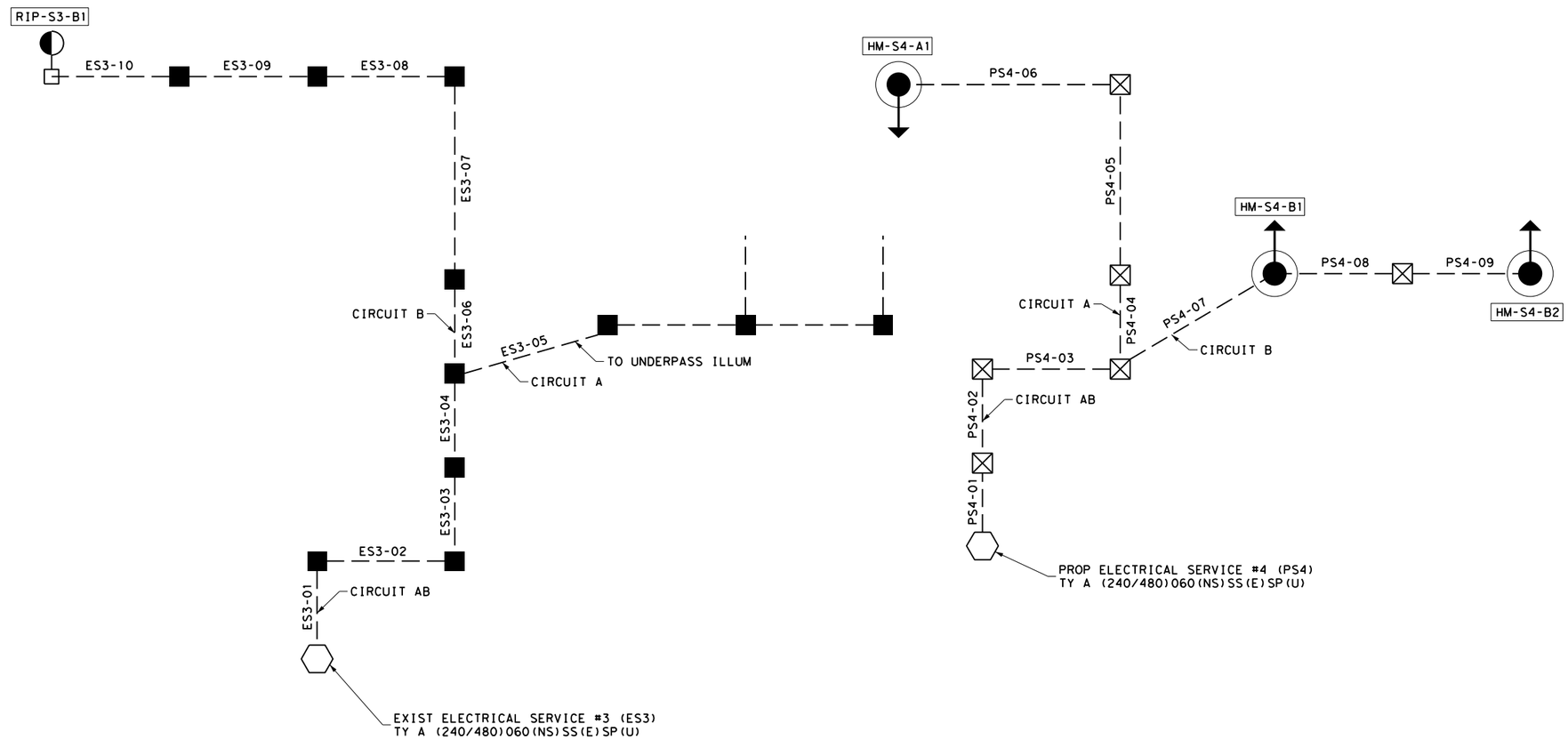

LEGEND

- GROUND BOX (TY A)
- GROUND BOX (TY D)
- CONDUIT
- RDWY ILLUM ASSEM (TRANS)
- RDWY ILLUM ASSEM (SHOE/BRIDGE)
- HIGH MAST ILLUM POLE
- ELEC SERVICE

POLE DESIGNATION

HM-S#-A#
- POLE #
- CIRCUIT #
- SERVICE #

CONDUIT DESIGNATION

ES#-##
- RUN #
- SERVICE #
- E - EXIST CONDUIT
- P - PROP CONDUIT

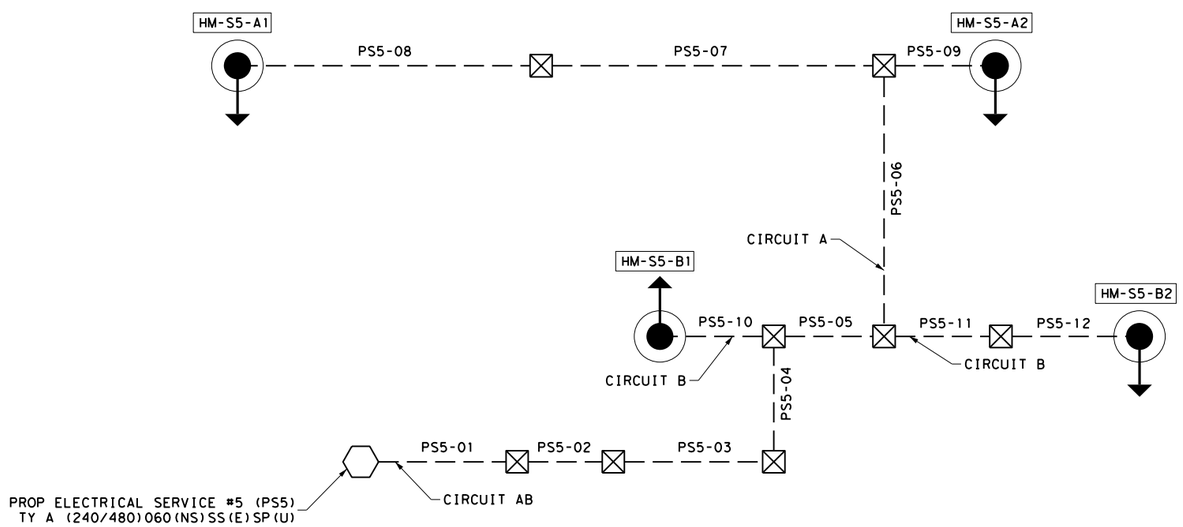

INTERIM REVIEW

THIS DOCUMENT IS RELEASED FOR THE PURPOSE OF INTERIM REVIEW UNDER THE AUTHORITY OF

PATRICK JALUFKA P.E., ON: 7/11/2025

IT IS NOT TO BE USED FOR CONSTRUCTION

PRELIMINARY NOT FOR CONSTRUCTION

© 2026 Texas Department of Transportation

PROPOSED ELECTRICAL SCHEMATIC

NOT TO SCALE

SHEET 3 OF 5

CHANGE ORDER	FED. RD. DIV. NO.	CONT	SECT	JOB	HIGHWAY
	6	0231	03	156	IH-14
	STATE	DIST	COUNTY		SHEET NO.
	TEXAS	WACO	BELL		108

c:\txdot\pw*online\txdot3\patrick.jalufka\d0785500\Electrical Schematic - Proposed V2.dgn 7/11/2025 4:38:49 PM
NODE

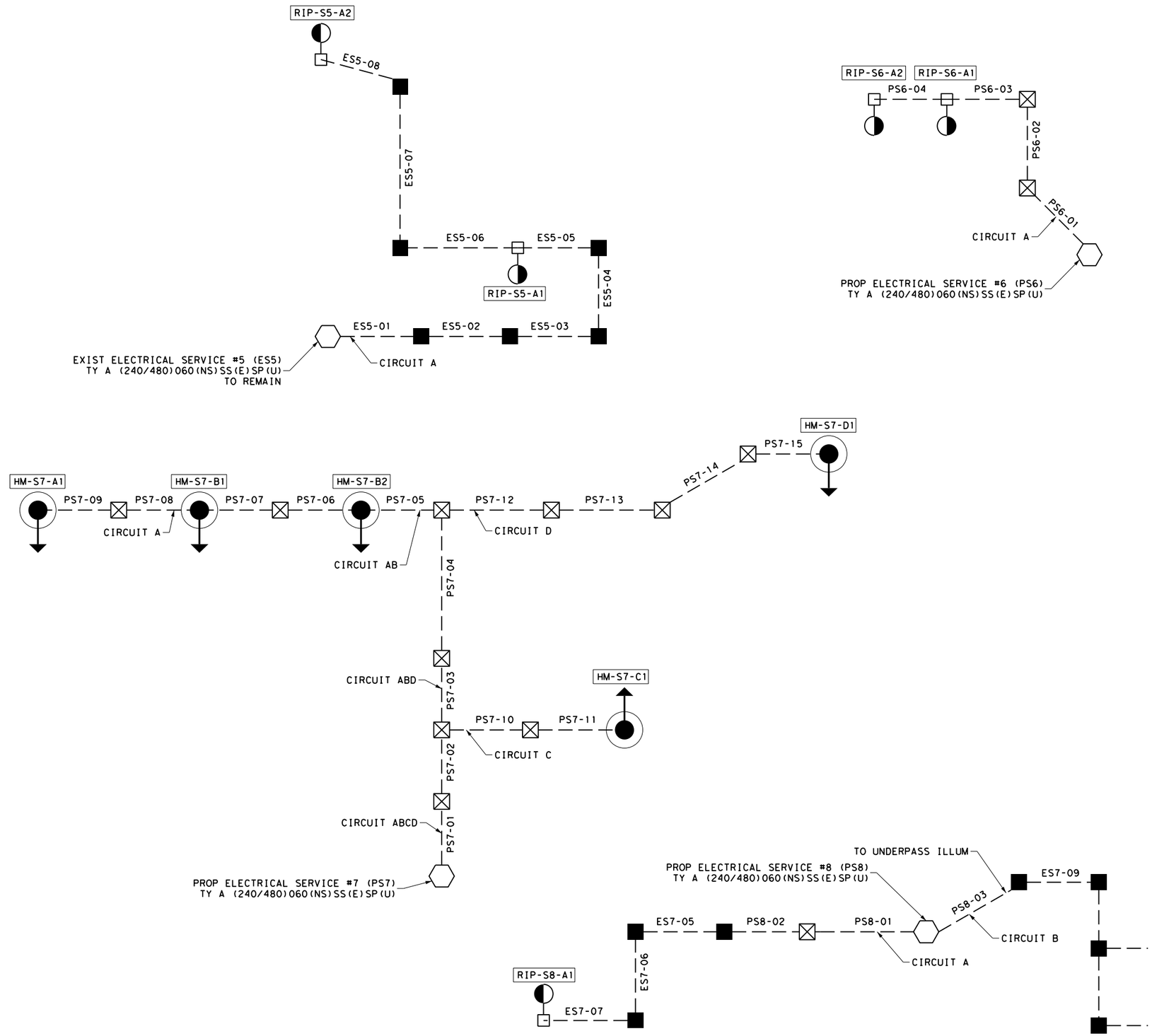

LEGEND

- GROUND BOX (TY A)
- GROUND BOX (TY D)
- CONDUIT
- RDWY ILLUM ASSEM (TRANS)
- RDWY ILLUM ASSEM (SHOE/BRIDGE)
- HIGH MAST ILLUM POLE
- ELEC SERVICE

POLE DESIGNATION

HM-S#-A#
- POLE #
- CIRCUIT #
- SERVICE #

CONDUIT DESIGNATION

ES#-##
- RUN #
- SERVICE #
- E - EXIST CONDUIT
- P - PROP CONDUIT

INTERIM REVIEW

THIS DOCUMENT IS RELEASED FOR THE PURPOSE OF INTERIM REVIEW UNDER THE AUTHORITY OF

PATRICK JALUFKA P.E., ON: 7/11/2025

IT IS NOT TO BE USED FOR CONSTRUCTION

PRELIMINARY NOT FOR CONSTRUCTION

© 2026 Texas Department of Transportation

PROPOSED ELECTRICAL SCHEMATIC

NOT TO SCALE

SHEET 4 OF 5

CHANGE ORDER	FED. RD. DIV. NO.	CONT	SECT	JOB	HIGHWAY
	6	0231	03	156	IH-14
	STATE	DIST	COUNTY		SHEET NO.
	TEXAS	WACO	BELL		109

c:\txdot\pwonline\txdot3\patrick.jalufka\d0785500\Electrical Schematic - Proposed V2.dgn 7/11/2025 4:38:49 PM
NODE

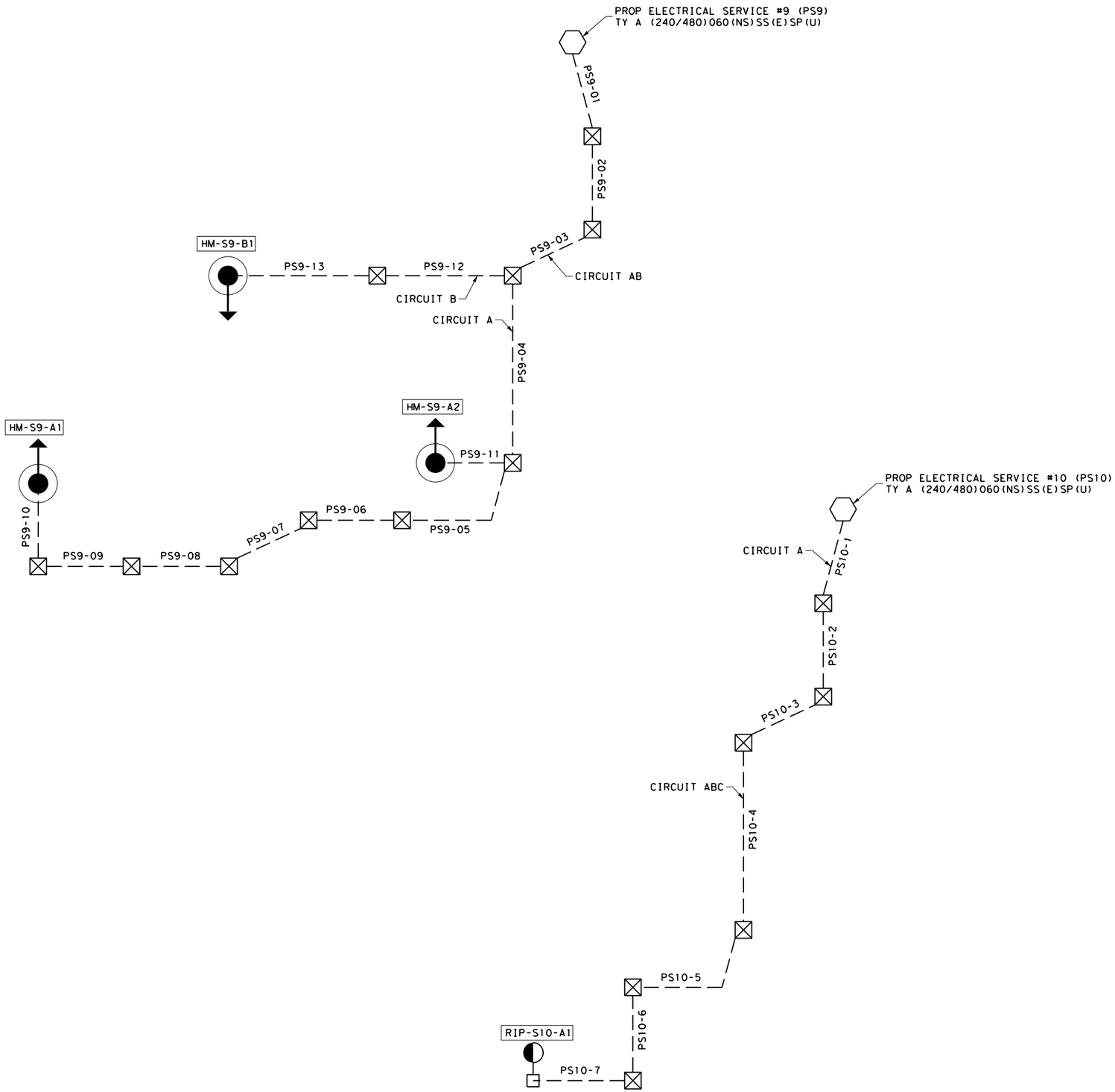

LEGEND

- GROUND BOX (TY A)
- GROUND BOX (TY D)
- CONDUIT
- RDWY ILLUM ASSEM (TRANS)
- RDWY ILLUM ASSEM (SHOE/BRIDGE)
- HIGH MAST ILLUM POLE
- ELEC SERVICE

POLE DESIGNATION

HM-S#-A#
- POLE #
- CIRCUIT #
- SERVICE #

CONDUIT DESIGNATION

ES#-##
- RUN #
- SERVICE #
- E - EXIST CONDUIT
- P - PROP CONDUIT

INTERIM REVIEW

THIS DOCUMENT IS RELEASED FOR THE PURPOSE OF INTERIM REVIEW UNDER THE AUTHORITY OF

PATRICK JALUFKA P.E., ON: 7/11/2025

IT IS NOT TO BE USED FOR CONSTRUCTION

PRELIMINARY NOT FOR CONSTRUCTION

© 2026 Texas Department of Transportation

PROPOSED ELECTRICAL SCHEMATIC

NOT TO SCALE

SHEET 5 OF 5

CHANGE ORDER	FED. RD. DIV. NO.	CONT	SECT	JOB	HIGHWAY
	6	0231	03	156	IH-14
	STATE	DIST	COUNTY		SHEET NO.
	TEXAS	WACO	BELL		110

c:\txdot\pwonline\txdot3\patrick.jalufka\d0785500\Electrical Schematic - Proposed V2.dgn 7/11/2025 4:38:49 PM
NODE

DISCLAIMER:
The use of this standard is governed by the "Texas Engineering Practice Act". No warranty of any kind is made by TxDOT for any purpose whatsoever. TxDOT assumes no responsibility for the conversion of this standard to other formats or for incorrect results or damages resulting from its use.

DATE:7/11/2025 4:39:02 PM
FILE: c:\txdot\pw_online\txdot3\patrick.jalufka\d0807935\ed1-25.dgn

GENERAL NOTES FOR ALL ELECTRICAL WORK

1. The location of all conduits, junction boxes, ground boxes, and electrical services is diagrammatic and may be shifted to accommodate field conditions.

2. Provide new, unused, and undamaged materials. Ensure that all materials and installations comply with the National Electrical Code (NEC), TxDOT standards and specifications, National Electrical Manufacturers Association (NEMA), and are listed by Underwriters Laboratories (UL) or a Nationally Recognized Testing Lab (NRTL). NRTLs such as CSA Group, Intertek Testing Services, or FM Approvals can be considered equivalent to UL. Where reference is made to NEMA listed devices, International Electrotechnical Commission (IEC) listed devices will not be considered an acceptable equal to NEMA. Faulty fabrication or poor workmanship in any material, equipment, or installation is justification for rejection. Replace or reinstall rejected material or equipment at no additional cost to the Department.

3. Miscellaneous nuts, bolts, and hardware, except for high strength bolts, may be stainless steel when plans specify galvanized, provided the bolt size is 1/2 in. or less in diameter.

4. Provide the following test equipment as required by the Engineer to confirm compliance with the contract and the NEC: voltmeter, ammeter, megohm meter (1000 volt DC), ground resistance tester, torque wrenches, and torque screwdrivers. Ensure all equipment has been properly calibrated within the last year. Provide calibration certification to the Engineer upon request. Operate test equipment during inspection as requested by the Engineer.

5. Install grounding as shown on the plans and in accordance with the NEC. Ensure all metallic conduits, metal poles, luminaires, and metal enclosures are bonded to an equipment grounding conductor. Provide stranded bare copper or green insulated grounding conductors. Ground rods, connectors, and bonding jumpers are subsidiary to the various bid items.

6. When required by the Engineer, notify the Department in writing of materials from the Material Producer List (MPL) intended for use on each project. Prequalified materials are listed on the MPL on TxDOT's website under "Roadway Illumination and Electrical Supplies." No substitutions will be allowed for materials on this list.

CONDUIT

A. MATERIALS

1. Provide conduit, junction boxes, fittings, and hardware per TxDOT Departmental Material Specification DMS-11030, "Conduit" and Item 618, "Conduit" of TxDOT's "Standard Specifications for Construction and Maintenance of Highways, Streets, And Bridges," latest edition. Provide conduits listed under Item 618 on the MPL under "Roadway Illumination and Electrical Supplies." Provide conduit types according to the descriptive code or as shown on the plans. Do not substitute other types of conduits for those shown. Provide Liquidtight Flexible Metal Conduit (LFMC) when flexible conduit is called for on galvanized steel Rigid Metal Conduit (RMC) systems. Provide Liquidtight Flexible Nonmetallic Conduit (LFNC) when flexible conduit is called for on Polyvinyl Chloride (PVC) systems.

2. Provide galvanized steel RMC for all exposed conduits, unless otherwise shown on the plans. Properly bond all metal conduits.

3. Unless otherwise shown on the plans, provide junction boxes with a minimum size as shown in the following table, which applies to the greatest number of conductors entering the box through one conduit with no more than four conduits per box. When a mixture of conductor sizes are present, count the conductors as if all are of the larger size. For situations not applicable to this table, size junction boxes per the NEC.

JUNCTION BOX SIZES

AWG	3 CONDUCTORS	5 CONDUCTORS	7 CONDUCTORS
#1	10" x 10" x 4"	12" x 12" x 4"	16" x 16" x 4"
#2	8" x 8" x 4"	10" x 10" x 4"	12" x 12" x 4"
#4	8" x 8" x 4"	10" x 10" x 4"	10" x 10" x 4"
#6	8" x 8" x 4"	8" x 8" x 4"	10" x 10" x 4"
#8	8" x 8" x 4"	8" x 8" x 4"	8" x 8" x 4"

4. Junction boxes with internal volumes up to 100 cu. in. and that are supported by entering raceways must have threaded entries or hubs identified for the intended purpose and be supported by connection of two or more rigid metal conduits. Secure conduit within 3 ft. of the box or within 18 in. of the box if all conduit entries are on the same side. Mechanically secure all junction boxes with an internal volume greater than 100 cu. in.

5. Provide hot dipped galvanized cast iron or sand cast aluminum outlet boxes for junction boxes containing only 10 AWG or 12 AWG conductors. Do not use die cast aluminum boxes. Size outlet boxes according to the NEC.

6. Do not use Intermediate Metal Conduit (IMC) or Electrical Metallic Tubing (EMT) unless specifically required by the plan sheets. When EMT is called for, provide junction boxes sized as directed above, listed and approved for outdoor use, unless otherwise noted on the plans. Provide junction boxes for IMC conduit systems that meet the same requirements for junction boxes used with RMC systems.

7. Provide PVC junction boxes intended for outdoor use on PVC conduit systems, unless otherwise noted on the plans.

8. Provide PVC elbows, unless otherwise shown in the plans. Use only a flat, high tensile strength polyester fiber pull tape for pulling conductors through the PVC conduit system.

A. MATERIALS (CONTINUED)

9. When galvanized steel RMC elbows are specifically called for in the plans and any portion of the RMC elbow is buried less than 18 in. below grade or bottom of the ground box, ground the RMC elbow with a grounding bushing on a rigid metal extension. Grounding of the rigid metal elbow is not required if the entire RMC elbow is encased in a minimum of 2 in. of concrete. PVC extensions are allowed on these concrete encased rigid metal elbows. Elbows are subsidiary to various bid items.

10. When required, provide High-Density Polyethylene (HDPE) conduit with factory installed internal conductors according to DMS-11060, "Duct Cable." At the Contractor's request and with approval by the Engineer, substitute HDPE conduit with no conductors according to DMS-11030 for PVC conduit bid under Item 618. Provide conduit of the size and schedule as shown on the plans. Do not extend HDPE conduit into ground boxes or foundations. Provide PVC elbows at all ground boxes and foundations.

11. Use two-hole straps or strut straps when supporting 2 in. and larger conduits. On electrical service poles, properly sized stainless steel or hot dipped galvanized strut straps or stand-off straps are allowed on the service riser conduit.

B. CONSTRUCTION METHODS

1. Provide and install expansion joint conduit fittings on all structure-mounted conduits at the structure's expansion joints to allow for movement of the conduit. In addition, provide and install expansion joint fittings on all continuous runs of galvanized steel RMC conduit externally exposed on structures such as bridges at maximum intervals of 150 ft. When requested by the project Engineer, supply manufacturer's specification sheet for expansion joint conduit fittings. Repair or replace expansion joint fittings that do not allow for movement at no additional cost to the Department. Provide the method of determining the amount of expansion to the Engineer upon request. Do not use LFMC or LFNC as a substitute for the required expansion conduit fittings.

2. Space all conduit supports at maximum intervals of 5 ft. Install conduit spacers when attaching metal conduit to surfaces of concrete structures. See "Conduit Mounting Options" on ED(2). Install conduit supports within 3 ft. of all enclosures and conduit terminations.

3. Do not attach conduit supports directly to pre-stressed concrete beams, except as shown specifically in the plans or as approved by the Engineer.

4. Unless otherwise shown on the plans, jack or bore conduit placed beneath existing roadways, driveways, sidewalks, or after the base or surfacing operation has begun. Backfill and compact the bore pits below the conduit per Item 476 "Jacking, Boring, or Tunneling Pipe or Box" prior to installing conduit or duct cable to prevent bending of the connections.

5. When placing conduit in the subgrade of new roadways, backfill all trenches with excavated material unless otherwise noted on the plans. When placing conduit in the subbase of new roadways, backfill all trenches with cement-stabilized base as per requirements of Items: 110, "Excavation;" 400, "Excavation and Backfill for Structures;" 401, "Flowable Backfill;" 402, "Trench Excavation Protection;" and 403, "Temporary Special Shoring."

6. During construction, temporarily cap or plug open ends of all conduit and raceways immediately after installation to prevent entry of dirt, debris and animals. Temporary caps constructed of durable duct tape are allowed. Tightly affix the tape to the conduit opening. Clean out the conduit and prove it clear in accordance with Item 618 prior to installing any conductors.

7. Ensure conduit entry into the top of an enclosure is waterproof by installing conduit sealing hubs or using boxes with threaded bosses. This includes surface mounted safety switches, meter cans, service enclosures, auxiliary enclosures and junction boxes. Grounding bushings on water tight sealing hubs are not required.

8. Fit the ends of all PVC conduit terminations with bushings or bell end fittings. Provide and install a grounding bushing on all metal conduit terminations.

9. Install a bonding jumper from each grounding bushing to the nearest ground rod, grounding lug, or equipment grounding conductor. Ensure all bonding jumpers are the same size as the equipment grounding conductor. Bonding of conduit used as a casing under roadways for duct cable is not required, if the duct extends the full length through the casing.

10. Place conduits entering ground boxes so that the conduit openings are between 3 in. and 6 in. from the bottom of the box. See the ground box detail on sheet ED(4).

11. After completion of conductor installation, immediately seal ends of all conduits emerging from ground with duct seal, expandable foam, or other methods approved by the Engineer. Do not use silicone caulking. Do not use duct tape as a permanent seal.

12. File smooth the cut ends of all mounting strut and conduit. To avoid overspray, paint the field cut ends of all mounting strut and RMC (threaded or non-threaded) with zinc rich paint (94% min. zinc content as specified on DMS-8103 and listed on the MPL for Galvanizing Repair Paints) before installing. Use zinc rich paint to touch up galvanized material as allowed under Item 445 "Galvanizing." Do not paint non-galvanized material with zinc rich paint as an alternative for materials required to be galvanized.

13. For all conduits, ensure the burial depth is 18" min. For conduits placed under a roadway, ensure the burial depth is 24" min.

Texas Department of Transportation

Traffic Safety Division Standard

ELECTRICAL DETAILS CONDUITS & NOTES

ED(1)-25

FILE: ed1-25.dgn	DN: TxDOT	CK: TxDOT	DW: TxDOT	CK: TxDOT
©TxDOT April 2025	CONT	SECT	JOB	HIGHWAY
REVISIONS	0231	03	156	IH-14
1-92 3-03 4-25 4-98 5-03 12-00 10-14	DIST	COUNTY		SHEET NO.
	WACO	BELL		111

ELECTRIC CONDUIT TO BRIDGE DECK ATTACHMENT

HANGER ASSEMBLY DETAIL

CONDUIT MOUNTING CHANNEL		
"SPAN"	"W" x "H"	"T"
less than 2'	1 5/8" x 1 3/8"	12 ga.
2'-0" to 2'-6"	1 5/8" x 1 5/8"	12 ga.
>2'-6" to 3'-0"	1 5/8" x 2 7/16"	12 ga.

NOTE: Channels with round or short slotted hole patterns are allowed, provided the load carrying capacity is not reduced by more than 15%.

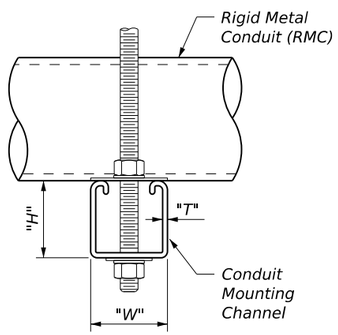

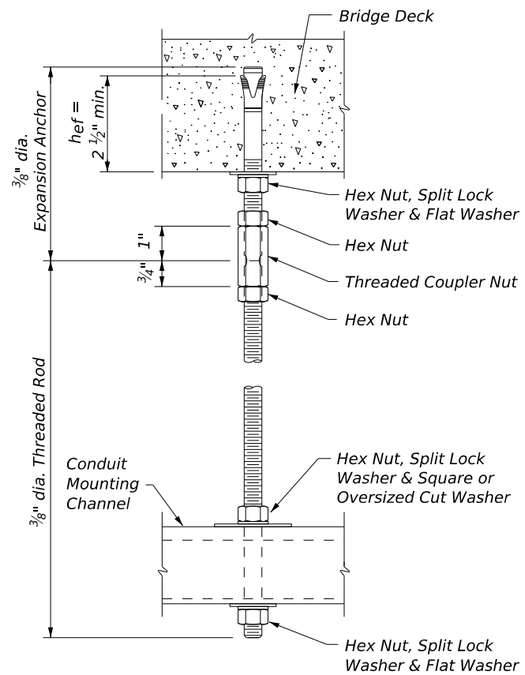

CONDUIT HANGING DETAIL

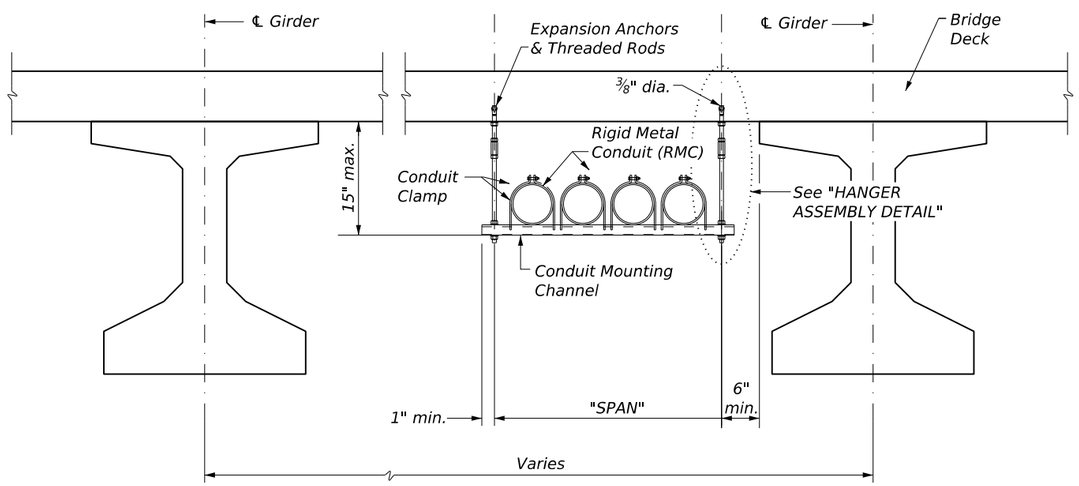

CONDUIT MOUNTING OPTIONS

ATTACHMENT TO CONCRETE SURFACES - SEE ED(1), CONDUIT, NOTE B.2

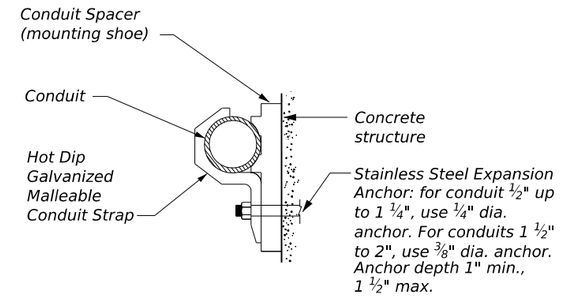

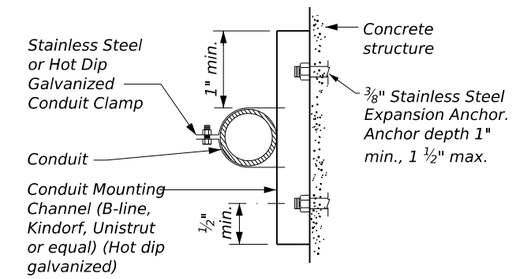

TYPICAL CONDUIT ENTRY TO BRIDGE STRUCTURE DETAIL

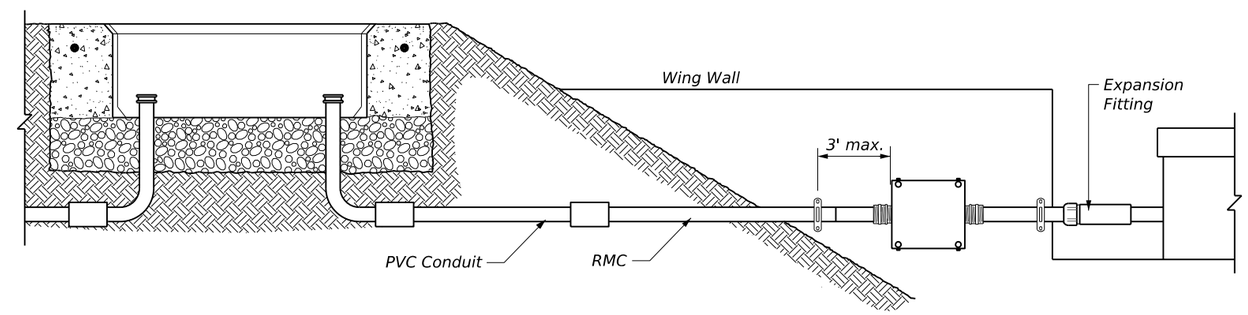

EXPANSION ANCHOR NOTES FOR BRIDGE DECK ATTACHMENT:

1. Use torque controlled mechanical expansion anchors that are approved for use in cracked concrete by the International Code Council, Evaluation Service (ICC-ES). The chosen anchor product shall have a designated ICC-ES Evaluation Report number, and its approval status shall be maintained on the ICC-ES website under Division 031600 for Concrete Anchors.

2. Unless otherwise approved by the Engineer: do not use adhesive anchors; do not use expansion anchors that are not included in the ICC-ES approval list; and do not use expansion anchors that are only approved for use in uncracked concrete.

3. Use anchors manufactured with stainless steel expansion wedges. Anchors manufactured with carbon steel expansion wedges are not allowed. Anchor bodies can be either zinc-plated carbon steel or stainless steel. Provide only stainless steel anchor bodies and expansion wedges for applications in marine environments.

4. Install anchors as shown on the plans and in accordance with the anchor manufacturer's published installation instructions. Arrange a field demonstration test to evaluate the procedures and tools. The test shall be witnessed and approved by the Engineer prior to furnishing anchors on the structure.

5. Prior to hole drilling, use rebar locator to ensure clearing of existing deck strands or reinforcement. Install anchors to ensure a minimum effective embedment depth, (h_{ef}), as shown. Increase (h_{ef}) as needed to ensure sufficient thread length for proper torquing and tightening of anchors.

6. Use anchors of at least 1600 lbs. tensile capacity (minimum of steel, concrete breakout, and concrete pullout strengths as determined by ACI 318 Appendix D) at the required minimum embedment depth (h_{ef}). No lateral loads shall be introduced after conduit installation.

DISCLAIMER:
The use of this standard is governed by the "Texas Engineering Practice Act". No warranty of any kind is made by TxDOT for any purpose whatsoever. TxDOT assumes no responsibility for the conversion of this standard to other formats or for incorrect results or damages resulting from its use.

DATE: 7/11/2025 4:39:15 PM
FILE: c:\txdot\pw_online\txdot3\patrick.jalufka\d0807935\ed2-25.dgn

Texas Department of Transportation — Traffic Safety Division Standard

ELECTRICAL DETAILS CONDUIT SUPPORTS

ED(2)-25

FILE: ed2-25.dgn	DN: TxDOT	CK: TxDOT	DW: TxDOT	CK: TxDOT
© TxDOT April 2025	CONT	SECT	JOB	HIGHWAY
REVISIONS	0231	03	156	IH-14
10-14 10-22 4-25	DIST		COUNTY	SHEET NO.
	WACO		BELL	112

71B

DISCLAIMER:
The use of this standard is governed by the "Texas Engineering Practice Act". No warranty of any kind is made by TxDOT for any purpose whatsoever. TxDOT assumes no responsibility for the conversion of this standard to other formats or for incorrect results or damages resulting from its use.

DATE: 7/11/2025 4:39:27 PM
FILE: c:\txdot\pw_online\txdot3\patrick.jalufka\d0807935\ed3-25.dgn

ELECTRICAL CONDUCTORS

A. MATERIAL INFORMATION

1. Provide Type XHHW insulated copper conductors in accordance with Departmental Material Specification DMS-11040, "Conductors" and Item 620, "Electrical Conductors." Provide conductors as listed on the Material Producer List (MPL) on the Department web site under "Roadway Illumination and Electrical Supplies" Item 620.

2. Identify grounded (neutral) conductors with white insulation. Identify grounding conductors (ground wires) with green insulation or bare conductors. Identify ungrounded (hot) conductors with any color insulation except green, white, or gray. Keep color scheme consistent throughout the wiring system. Identify conductors 6 American Wire Gauge (AWG) and smaller by continuous color jacket. Identify electrical conductors 4 AWG and larger by continuous color jacket or by colored tape. When identifying conductors with colored tape, mark at least 6 in. of the conductor's insulation with half laps of tape at each accessible location.

3. Insulated grounding conductors may be substituted for bare conductors, unless otherwise shown in the plans. Insulated grounding conductors must be color coded green in accordance with Note 2.

4. Provide a 6 AWG bare solid copper grounding electrode conductor to bond the electrical service equipment to the concrete encased grounding electrode or the ground rod at the service location. Connect the grounding electrode conductor to the ground rod with a UL listed connector in accordance with DMS-11040. Connect the grounding electrode conductor to the concrete encased grounding electrode as shown in the plans.

5. Where two or more circuits are present in one conduit or enclosure, permanently label the conductors of each branch circuit by attaching a non-metallic, weather resistant tag around both circuit conductors at each accessible location. Provide one-piece tags with two $\frac{3}{16}$" straps, large enough to indicate circuit number, letter, or other identification as shown in the plans. Print circuit identification on the tag with a permanent marker.

6. Use listed compression connectors, mechanical lugs, terminal blocks, or split bolt connectors for splicing as specified in DMS-11040. Use hot melt adhesive tape to fill the gap and seal the ends of heat shrink tubing. Provide UL listed gel-filled insulating splice covers. Splicing materials, insulating materials, breakaway disconnects, splice covers, and fuse holders are subsidiary to various bid items.

B. CONSTRUCTION METHODS

1. Use only a flat, high tensile strength polyester fiber pull tape for pulling conductors through the conduit system.

2. Leave 2 ft. to 3 ft. of length for each conductor up to the splice in ground boxes. Leave 3 ft. to 4 ft. of length for each conductor in ground boxes when pulled through with no splice. Leave 1 ft. to 1.5 ft. of length for each conductor at enclosures and pole bases. Leave 1.5 ft. to 3 ft. of length as required by electric utility for conductors exiting weatherheads.

3. Make splices only in junction boxes, ground boxes, pole bases, or electrical enclosures and use only listed compression connectors, mechanical lugs, terminal blocks, or split bolt connectors. Insulate splices with heavy wall heat shrink tubing or gel-filled insulating splice covers to provide a watertight splice. Overlap conductor insulation with heat shrink tubing a minimum of 2 in. past both sides of the splice. Where heat shrink tubing may not shrink sufficiently to provide a watertight seal around the individual conductors, prior to heating the tubing, increase the diameter of the conductor insulation using hot melt adhesive tape to provide a watertight seal between each conductor and the heat shrink tubing. Ensure the tape extends past the heat shrink tubing. Use hot melt adhesive tape to fill the gap and seal the ends of heat shrink tubing. Heat shrink tubing that appears to have been burned or overheated is considered defective and must be replaced.

4. Size and install gel-filled insulating splice covers according to manufacturer's specifications when used in place of heat shrink tubing.

5. Wire nuts with factory applied waterproof sealant may be used for 8 AWG or smaller conductors in above ground junction boxes, but not in pole bases or ground boxes. Install wire nuts in an upright position to prevent the accumulation of water.

6. Support conductors in illumination poles with a J-hook at the top of the pole.

7. When terminating conductors, remove the insulation and jacketing material without nicking the individual strands of the conductor. Conductors with nicked individual conductor strands or removed strands will be considered damaged.

8. Replace conductors and cables that are damaged or that fail an insulation resistance test at no additional cost to the Department.

9. Do not repair damaged conductors with duct tape, electrical tape, or wire nuts. Use only approved splicing methods.

B. CONSTRUCTION METHODS (CONTINUED)

10. Do not terminate more than one conductor under a single lug unless it is rated for multiple conductors. Do not exceed the lug's listing for maximum number and size of conductors allowed.

11. Follow manufacturer's instructions when terminating conductors to breakaway connectors. Properly torque threaded connections. Proper terminations are critical to the safe operation of breakaway devices. Trim waterproofing boots on breakaway connectors to fit snugly around the conductor to ensure a waterproof connection. Only one conductor may enter a single opening in a boot. Provide waterproof boots with the correct number of openings. Leave unused openings factory sealed. Use prequalified breakaway connectors as shown on the MPL.

12. Provide and install a separate stranded equipment grounding conductor (EGC) in all conduits that contain circuit wiring of 50 volts or more. Unless shown elsewhere, size the EGC to be the same size as the largest current carrying conductor in the conduit. Bond all EGCs together at every accessible location. For ITS installations, bond and ground metal ground box covers and other metal equipment as shown on ITS standards.

C. TEMPORARY WIRING

1. Install temporary conductors and electrical equipment in accordance with the NEC article "Temporary Installations" and Department standard sheets.

2. Provide a ground fault circuit interrupter (GFCI) for powering portable electrical equipment, power tools, ice machines, ice storage bins and refrigerators located outdoors at grade. GFCI may be any one of the following: molded cord and plug set, receptacle, or circuit breaker type.

3. Use listed wire nuts with factory applied sealant for temporary wiring where approved.

4. Enclose conductor splices within a listed enclosure or ground box, or ensure the splices are more than 10 ft. above grade vertically and more than 5 ft. horizontally from any metal structure. When installing temporary conductors in areas subject to vehicle traffic or mobile construction equipment, ensure the vertical clearance to ground is at least 18 ft. when measured at the lowest point. Ground messenger wires that support power conductors in conformance with the NEC.

5. Protect and when necessary repair any existing electrical conduits uncovered during the construction process in a timely manner and in conformance with the NEC.

GROUND RODS & GROUNDING ELECTRODES

A. MATERIAL INFORMATION

1. Provide and install a grounding electrode at electrical services. Provide ground rods according to DMS-11040 and the plans. Larger diameter or longer length rods may be called for in some locations. Concrete encased grounding electrodes may be called for in some locations including electrical services — see plan sheets.

B. CONSTRUCTION METHODS

1. Furnish and install ground rods in soil, concrete, or both, as called for in the plans. For ground rods installed in concrete, ensure the connection of the conductor to the ground rod is readily accessible for inspection or repairs. For ground rods installed in soil, ensure that the upper end is between 2 to 4 in. below finished grade.

2. Do not place ground rods in the same drilled hole as a timber or concrete pole.

3. Install ground rods so the imprinted part number is at the upper end of the rod.

4. Remove all non-conductive material such as concrete splatter from the rod at the clamp location.

5. Route all conductors as short and straight as possible for connection to lightning protection ground rods. When a bend is required, ensure a minimum radius bend of 4 in.

6. Unless otherwise called for in the plans, protect grounding electrode conductors with non-metallic conduit. When protecting grounding electrode conductors with metal conduit, provide and install a grounding bushing and properly sized bonding jumper on each end of the metal conduit.

7. Written authorization is required before installing a ground rod in a horizontal trench for rocky soil or a solid rock bottom.

COMPRESSION SPLICE
OPTION 1

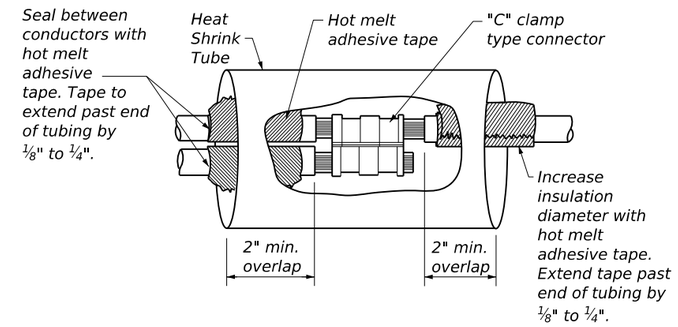

SPLIT BOLT SPLICE
OPTION 2

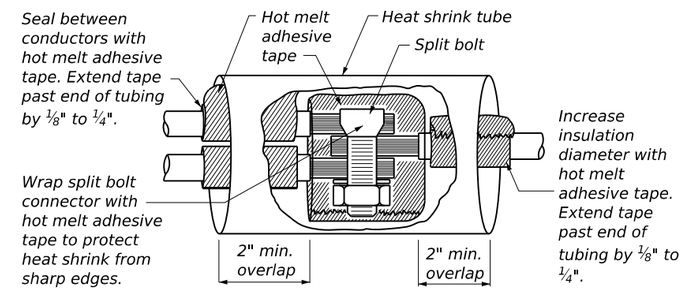

GEL-FILLED INSULATED SPLICE
OPTION 3

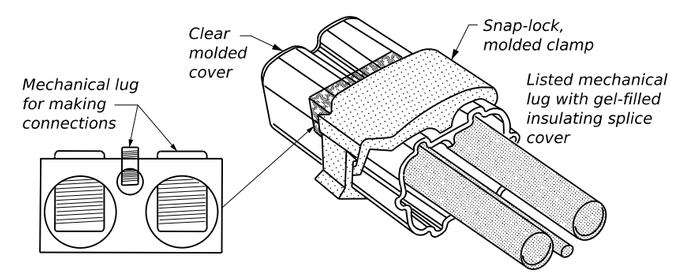

Texas Department of Transportation — Traffic Safety Division Standard

ELECTRICAL DETAILS CONDUCTORS

ED(3)-25

FILE: ed3-25.dgn	DN: TxDOT	CK: TxDOT	DW: TxDOT	CK: TxDOT
©TxDOT April 2025	CONT	SECT	JOB	HIGHWAY
REVISIONS	0231	03	156	IH-14
1-92 12-00 10-14 10-93 3-03 4-25 4-98 5-03	DIST	COUNTY		SHEET NO.
	WACO	BELL		113

APRON FOR GROUND BOX

PLAN VIEW

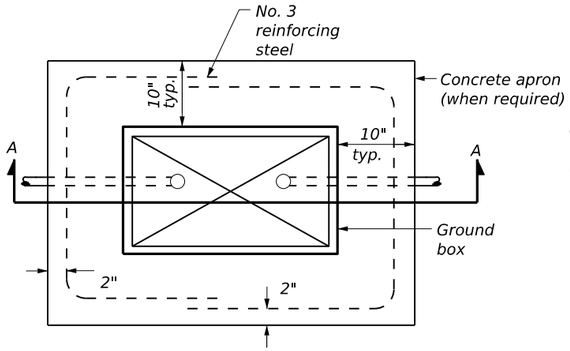

SECTION A - A

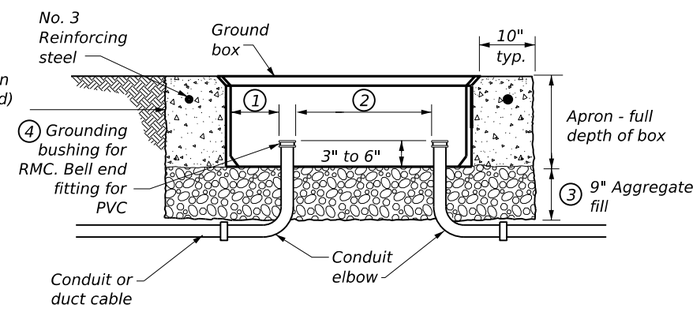

SECTION A - A NOTES:

1. Uniformly space ends of conduits within the ground box. Position ends of conduits so that ground box walls do not interfere with the installation of grounding bushings or bell end fittings.

2. Maintain sufficient space between conduits to allow for proper installation of bushing.

3. Place aggregate under the box, not in the box. Aggregate should not encroach on the interior volume of the box.

4. Install a grounding bushing on the upper end of all RMC terminating in a ground box. Ground RMC elbows when any part of the elbow is less than 18 in. below the bottom of the ground box. Install a PVC bushing or bell end fitting on the upper end of all PVC conduits terminating in a ground box.

NOTES:

A. MATERIALS

1. Provide polymer concrete ground boxes measuring 16 in. x 30 in. x 24 in. (W x L x D) or smaller in accordance with Departmental Material Specification DMS-11070, "Ground Boxes" and Item 624, "Ground Boxes."

2. Provide Type A, B, C, D, and E ground boxes as shown in the plans and as listed on the Material Producers List (MPL) on the Department web site under "Roadway Illumination and Electrical Supplies," Item 624.

3. Ensure ground box cover is correctly labeled in accordance with DMS-11070.

4. Provide larger ground boxes in accordance with Item 624 and as shown in the plans.

B. CONSTRUCTION METHODS

1. Before setting ground box and after placing and capping conduits, lay an aggregate bed a minimum of 9 in. deep that extends 10 in. beyond the sides of the ground box. Provide coarse aggregate sized 3/4 in. to 2 in., with no more than 20% material passing through a no. 8 sieve, and as defined by the current ASTM C33/33M standard. Clean aggregate and dirt from conduits according to Item 618.

2. Cast ground box aprons in place. Reinforcing steel may be field bent. Ensure the depth of concrete for the apron extends from finished grade to the top of the aggregate bed under the box. Ground box aprons, including concrete and reinforcing steel, are subsidiary to ground boxes when called for by descriptive code.

3. Keep bolt holes in the box clear of dirt. Bolt covers down when not working in ground boxes.

4. Install all conduits and elbows in a professional and skillful manner. Uniformly space conduits so grounding bushings and bell end fittings can easily be installed.

5. Temporarily seal all conduits in the ground box until conductors are installed.

6. Permanently seal conduits immediately after the completion of conductor installation. Permanently seal the ends of all conduits with duct seal, expandable foam, or other method as approved. Do not use duct tape as a permanent conduit seal. Do not use silicone caulk as a sealant.

7. Bond all equipment grounding conductors in a ground box together with listed connectors.

8. When a Type B or D ground box is stacked to meet volume requirements, an appropriately sized hole may be cut for conduit entry in the side wall at least 18 in. below grade.

9. If an existing ground box in the contract has a metal cover, bond the cover to the equipment grounding conductor with a 3 ft. long stranded bonding jumper that is the same size as the grounding conductor. The bonding jumper is subsidiary to various bid items. Verify existing ground boxes with metal covers are shown on the plans, with notes fully describing the work required.

10. If other ground boxes with metal covers are within the project limits but are not part of the contract, the Engineer may direct the Contractor to bond the metal covers, identifying the specific boxes in writing. This work will be paid for separately.

11. Bond metal ground box covers to the grounding conductor with a tank ground type lug.

GROUND BOXES

TYPE	OUTSIDE DIMENSIONS (Width x Length X Depth)
A	12" X 23" X 11"
B	12" X 23" X 22"
C	16" X 29" X 11"
D	16" X 29" X 22"
E	12" X 23" X 17"

GROUND BOX COVERS

TYPE	DIMENSIONS							
	H	I	J	K	L	M	N	P
A, B & E	23 ¼"	23"	13 ¾"	13 ½"	9 ⅞"	5 ⅛"	1 ⅜"	2"
C & D	30 ½"	30 ¼"	17 ½"	17 ¼"	13 ¼"	6 ¾"	1 ⅜"	2"

GROUND BOX COVER

PLAN VIEW

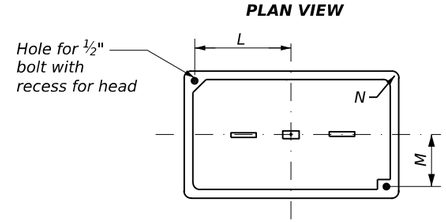

END

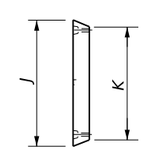

SIDE

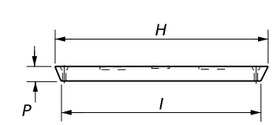

Texas Department of Transportation

Traffic Safety Division Standard

ELECTRICAL DETAILS GROUND BOXES

ED(4)-25

FILE: ed4-25.dgn	DN: TxDOT	CK: TxDOT	DW: TxDOT	CK: TxDOT
© TxDOT April 2025	CONT	SECT	JOB	HIGHWAY
REVISIONS	0231	03	156	IH-14
1-92 3-03 4-25	DIST		COUNTY	SHEET NO.
4-98 5-03	WACO		BELL	114
12-00 10-14				

71D

DISCLAIMER:
The use of this standard is governed by the "Texas Engineering Practice Act". No warranty of any kind is made by TxDOT for any purpose whatsoever. TxDOT assumes no responsibility for the conversion of this standard to other formats or for incorrect results or damages resulting from its use.

DATE:7/11/2025 4:39:42 PM
FILE: c:\txdot\pw_online\txdot3\patrick.jalufka\d0807935\ed4-25.dgn

DISCLAIMER:
The use of this standard is governed by the "Texas Engineering Practice Act". No warranty of any kind is made by TxDOT for any purpose whatsoever. TxDOT assumes no responsibility for the conversion of this standard to other formats or for incorrect results or damages resulting from its use.

DATE: 7/11/2025 4:39:55 PM
FILE: c:\txdot\pw_online\txdot3\patrick.jalufka\d0807935\ed5-25.dgn

ELECTRICAL SERVICES NOTES

1. Provide electrical services in accordance with Electrical Details standard sheets, Departmental Material Specification (DMS)-11080, "Electrical Services" and Item 628, "Electrical Services." Provide electrical service types A, C, and D, as listed on the Material Producers List (MPL) on the Department web site under "Roadway Illumination and Electrical Supplies," Item 628. Provide other service types as detailed on the plans.

2. Coordinate with the Engineer and the utility provider for metering and compliance with utility requirements. Primary line extensions, connection charges, meter charges, and other charges by the utility company to provide power to the location are paid for in accordance with Item 628. Get approval for the costs associated with these charges prior to engaging the utility company to do the work. Consult with the utility provider to determine costs and requirements, and coordinate the work as approved.

3. Provide a Master Lock, Model No. 2, M1, or 6121, keyed to code 2195. Master Lock 2195 keys and locks become property of the Department. Unless otherwise approved, do not energize electrical service equipment until locks are installed.

4. Enclosures with external disconnects that de-energize all equipment inside the enclosure do not need a dead front trim. Protect incoming line terminations from incidental contact as required by the NEC.

5. When galvanized is specified for nuts, screws, bolts or miscellaneous hardware, stainless steel may be used.

6. Provide wiring and electrical components rated for 75°C. Provide red, black, and white colored XHHW service entrance conductors of minimum size 6 American Wire Gauge (AWG). Identify conductors per ED(3). Ensure each service entrance conductor exits through a separately bushed non-metallic opening in the weatherhead. The lengths of the conductors outside the weatherhead are to be 1.5 ft. to 3 ft. as required by electric utility.

7. Provide rigid metal conduit (RMC) for all conduits on service, except for the ½ in. PVC conduit containing the electrical service grounding electrode conductor. Size the service entrance conduit as shown in the plans. Ensure conduit for branch circuit entry to enclosure is the same size as shown on the layout sheets for branch circuit conduit. Extend all rigid metal conduits a minimum of 6 in. underground and then couple to the type and schedule of the conduit shown on the plans. Install a grounding bushing on the RMC where it terminates in the service enclosure.

8. Use of liquidtight flexible metal conduit (LFMC) is allowed between the meter and service enclosure when they are mounted 90 to 180 degrees from each other. Size this LFMC the same size as the service entrance conduit. LFMC must not exceed 3 ft. in length. Strap LFMC within 1 ft. of each end. Terminate each end of the LFMC with a grounding bushing or fitting. The LFMC must contain a grounded (neutral) conductor. Ensure bends in LFMC do not exceed 180 degrees. A pull test is required on all installed conductors, with at least 6 in. of free conductor movement demonstrated to the satisfaction of the Engineer.

9. Ensure all mounting hardware and installation details of services conform to utility company specifications.

10. Provide the following documents in the electrical service document pocket: schematic drawing unique to the service from the UL 508 shop; plan sheet showing Electrical Service Data Chart for the service; plan sheets for the circuits powered by the service; and red lined plan sheets if installation differs from the original design. Reduce larger sheets to 8 ½ in. x 11 in. and laminate all documents.

11. When providing an "Off The Shelf" Type D or Type T service, provide laminated plan sheets detailing equipment and branch circuits supplied by that service. Reduce 11 in. x 17 in. plan sheets to 8 ½ in. x 11 in. before laminating. When the enclosure has no door pocket, deliver these drawings to the Engineer before completion of the work.

12. Do not install conduit in the back wall of a service enclosure where it would penetrate the equipment mounting panel inside the enclosure. Provide grounding bushings on all metal conduits, and terminate bonding jumpers to grounding bus. Grounding bushings are not required when the end of the metal conduit is fitted with a watertight conduit hub or meter hub.

MAIN DISCONNECT & BRANCH CIRCUIT BREAKERS

1. Field drill flange-mounted remote operator handle, if needed, to ensure handle is lockable in both the "On" and "Off" positions.

2. When the utility company provides a transformer larger than 50 KVA, verify that the available fault current is less than the circuit breaker's ampere interrupting capacity (AIC) rating and provide documentation from the electric utility provider to the Engineer.

PHOTOELECTRIC CONTROL

1. Provide photocell as listed on the MPL. Move, adjust, or shield the photocell from stray or ambient night time light to ensure proper operation. Mount photocell facing north when practical. Mount top of pole photocells as shown on Top Mounted Photocell Detail.

ELECTRICAL SERVICE DATA (EXAMPLE) ∗

ELEC. SERVICE ID	PLAN SHEET NUMBER	ELECTRICAL SERVICE DESCRIPTION	SERVICE CONDUIT SIZE ∗∗	SERVICE CONDUCTORS NO./SIZE	SAFETY SWITCH AMPS	MAIN CKT. BKR. POLE/AMPS	LIGHTING CONTACTOR AMPS	PANELBOARD/ LOADCENTER AMP RATING	BRANCH CIRCUIT ID	BRANCH CKT. BKR. POLE/AMPS	BRANCH CIRCUIT AMPS	KVA LOAD
SB 183	289	ELC SRV TY A 240/480 100(SS)AL(E)SF(U)	2"	3/#2	100	2P/100	2P/100	N/A	Lighting NB	2P/40	26	28.1
									Lighting SB	2P/40	25	
									Underpass	1P/20	15	
NB Access	30	ELC SRV TY D 120/240 060(NS)SS(E)TS(O)	1 ¼"	3/#6	N/A	2P/60	2P/30	100	Sig. Controller	1P/30	23	5.3
									Luminaires	2P/20	9	
									CCTV	1P/20	3	
2nd & Main	58	ELC SRV TY T 120/240 000(NS)GS(N)SP(O)	1 ¼"	3/#6	N/A	N/A	N/A	70	Flashing Beacon 1	1P/20	4	1.0
									Flashing Beacon 2	1P/20	4	

∗ Example only, not for construction. All new electrical services must have electrical service data chart specific to that service as shown in the plans.

∗∗ Verify service conduit size with utility. Size may change due to utility meter requirements. Ensure conduit size meets the National Electrical Code.

ELECTRICAL SERVICE BID ITEM DESCRIPTIONS

ELEC SERV TY X XXX/XXX XXX(XX)XX(X)XX(X)

SCHEMATIC TYPE

SERVICE VOLTAGE

DISCONNECT AMP RATING
NOTE: 000 indicates main lug only, typically Type T

SAFETY SWITCH
(SS) = Safety Switch Ahead of Meter - Check with Utility
(NS) = No Safety Switch Ahead of Meter - Check with Utility

ENCLOSURE TYPE
GS = Galvanized steel ("off the shelf")
SS = Stainless steel (Custom Enclosure) - See MPL
AL = Aluminum (Custom Enclosure) - See MPL

PHOTOCELL MOUNTING LOCATION
(E) = Inside Service/Enclosure Mounted
(T) = Top of pole
(L) = Luminaire mounted
(N) = None - No Photocell or Lighting Contactor Required

SERVICE SUPPORT TYPE
GC = Granite concrete
OC = Other concrete
TP = Timber pole
SP = Steel pole
SF = Steel frame
OT = Pole by others or paid for separately
EX = Existing pole
TS = Service on traffic signal pole
PS = Pedestal Service

SERIVCE FEED
O = Overhead Service Feed from Utility
U = Underground Service Feed from Utility

TOP MOUNTED PHOTOCELL

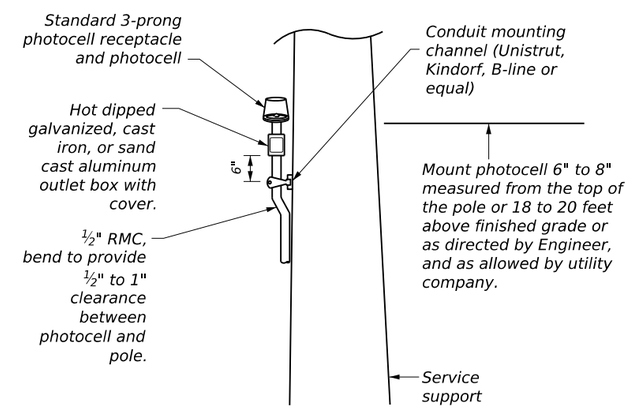

Install conduit strap maximum 3 ft. from box. Spacing between straps supporting conduit is 5 ft. maximum.

Texas Department of Transportation — Traffic Safety Division Standard

ELECTRICAL DETAILS SERVICE NOTES & DATA

ED(5)-25

FILE: ed5-25.dgn	DN: TxDOT	CK: TxDOT	DW: TxDOT	CK: TxDOT
© TxDOT April 2025	CONT	SECT	JOB	HIGHWAY
REVISIONS	0231	03	156	IH-14
4-98 10-14 12-00 4-25 3-03	DIST		COUNTY	SHEET NO.
	WACO		BELL	115

71E

DISCLAIMER:
The use of this standard is governed by the "Texas Engineering Practice Act". No warranty of any kind is made by TxDOT for any purpose whatsoever. TxDOT assumes no responsibility for the conversion of this standard to other formats or for incorrect results or damages resulting from its use.

TYPE A
THREE WIRE

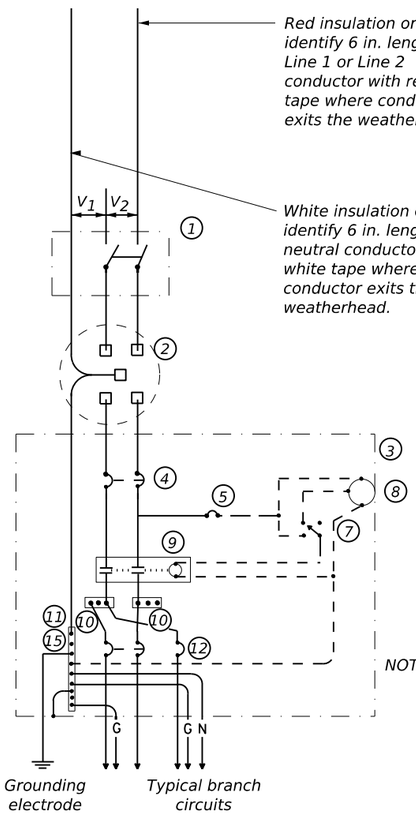

TYPE C
THREE WIRE

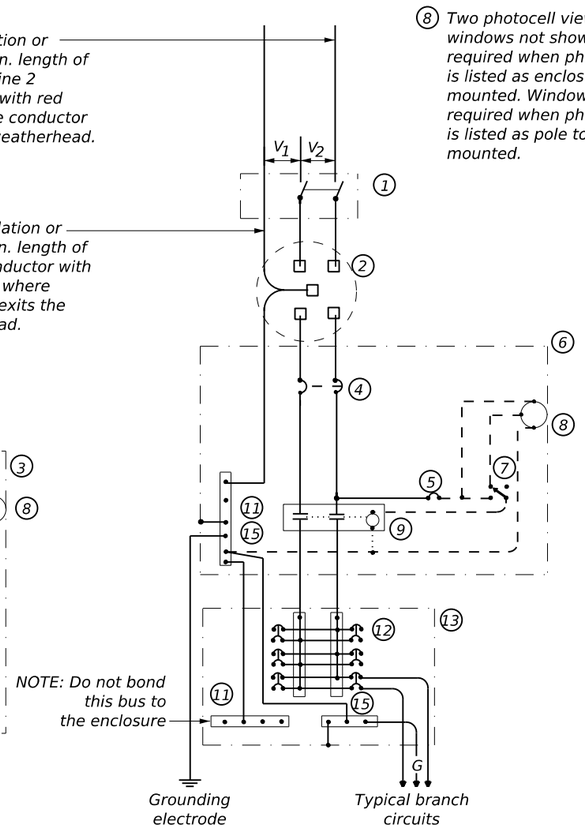

TYPE D - CUSTOM
120/240 VOLTS - THREE WIRE

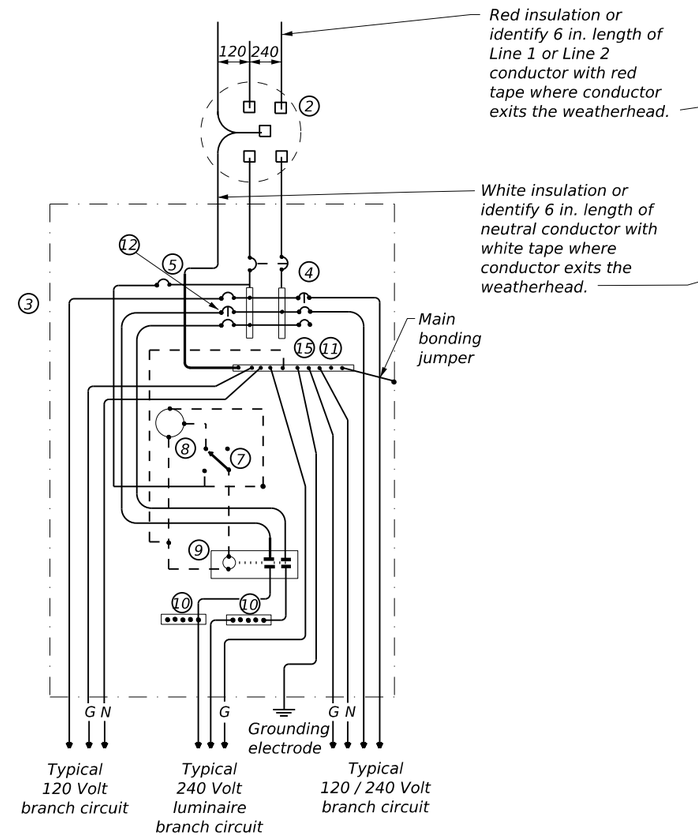

TYPE T
120/240 VOLTS - THREE WIRE

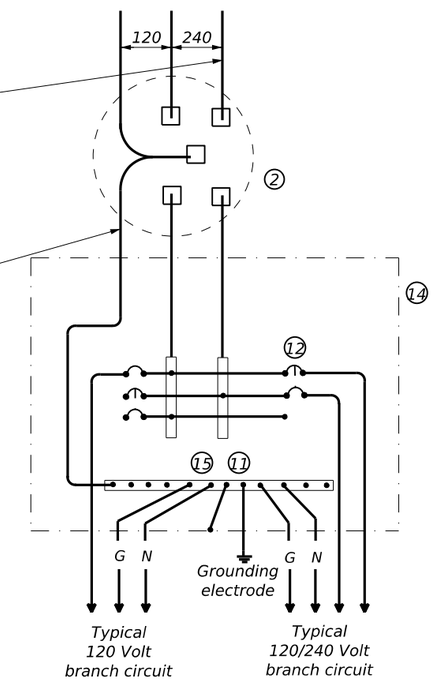

NOTE: Galvanized steel - "off the shelf" only. When a photocell is required, install at top of pole or on luminaire only.

WIRING LEGEND	
———	Power Wiring
- - - -	Control Wiring
—N—	Neutral Conductor
—G—	Equipment grounding conductor (always required)

SCHEMATIC NOTES:

1. Safety Switch (when required)
2. Meter (when required - verify with electric utility provider)
3. Service Assembly Enclosure
4. Main Disconnect Breaker (See Electrical Service Data)
5. Circuit Breaker, 15 Amp (Control Circuit)
6. Auxiliary Enclosure
7. Control Station ("H-O-A" Switch)
8. Photo Electric Control (enclosure-mounted shown)
9. Lighting Contactor
10. Power Distribution Terminal Blocks
11. Neutral Bus
12. Branch Circuit Breaker (See Electrical Service Data)
13. Separate Circuit Breaker Panelboard
14. Load Center
15. Ground Bus

Texas Department of Transportation — Traffic Safety Division Standard

ELECTRICAL DETAILS SERVICE SCHEMATICS AND NOTES

ED(6)-25

FILE: ed6-25.dgn	DN: TxDOT	CK: TxDOT	DW: TxDOT	CK: TxDOT
© TxDOT April 2025	CONT	SECT	JOB	HIGHWAY
REVISIONS	0231	03	156	IH-14
4-98 10-14 12-00 4-25 3-03	DIST	COUNTY		SHEET NO.
	WACO	BELL		116

71F

DATE: 7/11/2025 4:40:08 PM
FILE: c:\txdot\pw_online\txdot3\patrick.jalufka\d0807935\ed6-25.dgn

SUPPORT TYPE STEEL POLE (SP) AND STEEL FRAME (SF) NOTES:

1. Provide steel pole and steel frame supports as per TxDOT Departmental Material Specification DMS-11080, "Electrical Services." Mount all equipment and conduit on 12 gauge galvanized steel or stainless steel channel strut, 1 ½ in. or 1 ⅝ in. wide by 1 in. to 3 ¾ in. deep Unistrut, Kindorf, B-line or equal. Drill, tap, and bolt or weld all channel and hardware to vertical members as approved. Do not stack channel. File smooth and paint field-cut ends of all channel with zinc-rich paint before installing.

2. Install a one point rack or eye bolt bracket 6 in. to 12 in. below the weatherhead as an overhead service drop anchoring point for the electric utility. Attaching bolt must pass through the pole and use a nut, washer, and locking washer on the other size. Self-tapping screws or lag bolts are not allowed.

3. Provide and install galvanized ¾ in. x 18 in. x 4 in. (dia. x length x hook length) anchor bolts for underground service supports. Provide and install galvanized ¾ in. x 56 in. x 4 in. anchor bolts for overhead service supports. Ensure anchor bolts have 3 in. of thread, with 3 ¼ in. to 3 ½ in. of the exposed anchor bolt projecting above finished foundation. Provide and install leveling nuts for all anchor bolts.

4. Use Class C concrete for foundations. Ensure reinforcing steel is Grade 60 with 3 in. of unobstructed concrete cover.

5. Shop drawings are not required for service support structure unless specifically stated elsewhere or directed by the Engineer.

6. Avoid contact of the service drop and service entrance conductors with the metal pole to prevent abrasion of the insulated conductors.

7. Placement of the meter and service enclosure may vary based on the installation of a safety switch.

8. Drill and tap steel poles and frames for ½ in. x 13 UNC tank ground fitting. For steel pole service supports, provide and install tank ground fitting 4 in. to 6 in. directly below the electrical service enclosure. Provide properly sized hole through the bottom of the enclosure for the service grounding electrode conductor. Ensure electrical service grounding electrode conductor is as short and straight as possible from the enclosure to the tank ground fitting.

9. For steel frame service supports, provide and install tank ground fitting on steel frame post. Install service grounding electrode conductor in a non-metallic conduit or tubing from the enclosure to the steel frame post. Connect electrical service grounding electrode conductor to the tank ground fitting. See SF, SP details and Inset A for more information.

10. Provide and install grounding bushings where RMC terminates in the enclosure. Grounding bushings are not required when RMC is fitted into a watertight conduit hub or meter hub.

11. If steel pole or frame is painted, bond each separate painted piece with a bonding jumper and lugs screwed into tapped holes.

12. Provide ¼ in. x 20 UNC machine screws for bonding. Do not use sheet metal screws. Remove all non-conductive material at contact points. Terminate bonding jumpers with listed devices. Install 6 AWG or larger stranded copper bonding jumpers. Make up all threaded bonding connections wrench-tight.

13. Bond one of the anchor bolts to the rebar cage with 6 AWG bare stranded copper conductor. Use listed mechanical connectors rated for embedment in concrete. See Inset B.

TYPE SF(U)
UNDERGROUND SERVICE

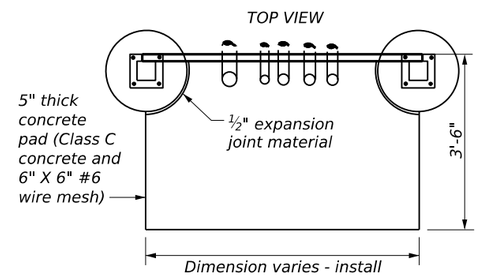

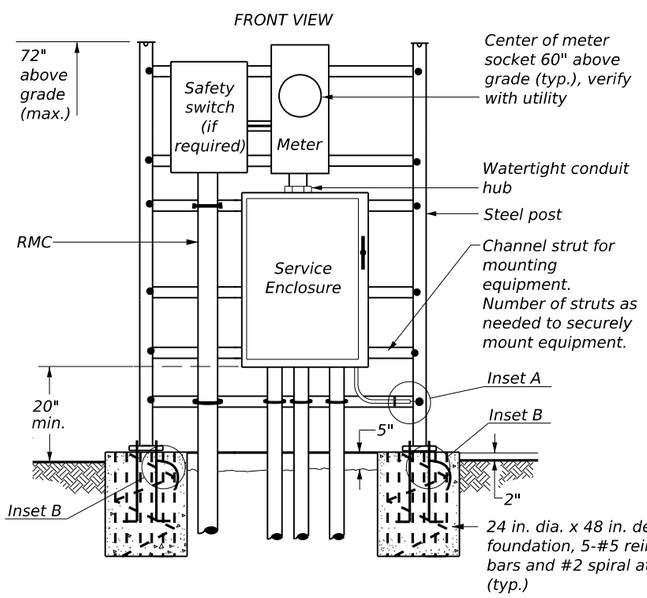

TYPE SP(O)
OVERHEAD SERVICE

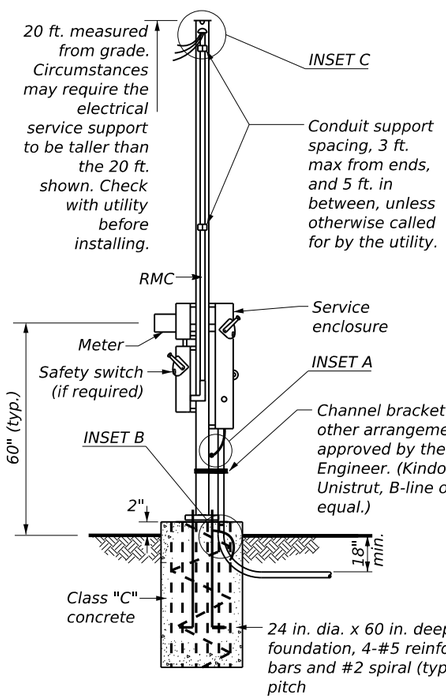

TYPE SP(U)

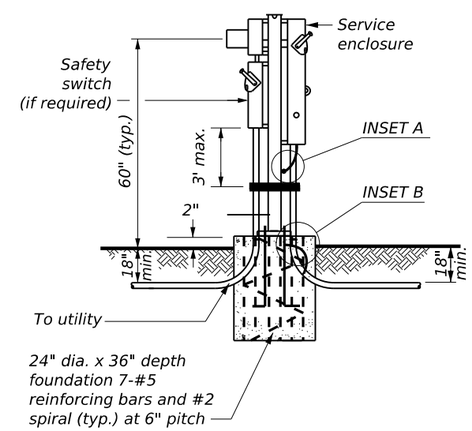

HOOKED ANCHOR DETAIL

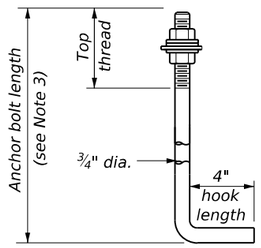

BASE PLATE DETAIL

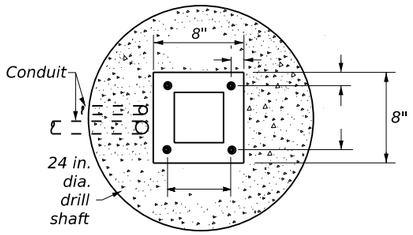

INSET A
FRONT VIEW

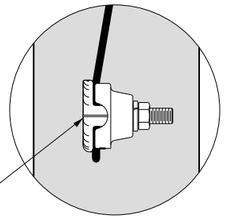

Drill, tap, and thread ½" x 13 UNC. Install tank ground fitting, connect electrical service grounding electrode conductor. See Note 8.

POLE TOP PLATE DETAIL

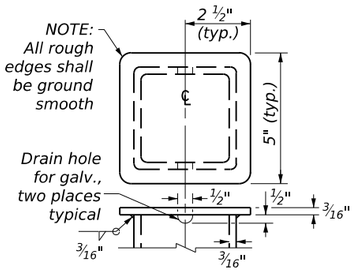

BOTTOM OF POLE DETAIL
TYPES SF & SP

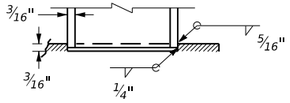

INSET B

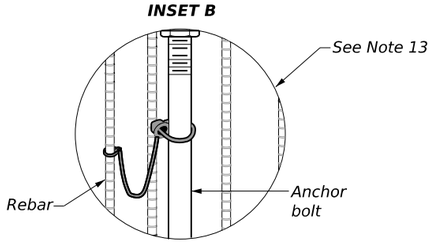

INSET C
SIDE VIEW

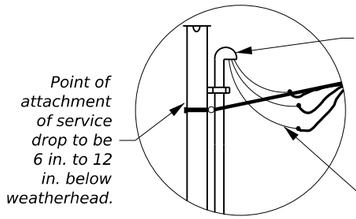

Identify conductors red, black, and white as specified in ED(3), Electrical Conductors, Note A.2.
Provide 1.5 ft. to 3 ft. of conductor length as required by electric utility.

Texas Department of Transportation — Traffic Safety Division Standard

ELECTRICAL DETAILS SERVICE SUPPORT TYPES SF & SP

ED(7)-25

FILE: ed7-25.dgn	DN: TxDOT	CK: TxDOT	DW: TxDOT	CK: TxDOT
© TxDOT April 2025	CONT	SECT	JOB	HIGHWAY
REVISIONS	0231	03	156	IH-14
1-92 3-03 4-25 4-98 5-03 12-00 10-14	DIST	COUNTY		SHEET NO.
	WACO	BELL		117

71G

DISCLAIMER:
The use of this standard is governed by the "Texas Engineering Practice Act". No warranty of any kind is made by TxDOT for any purpose whatsoever. TxDOT assumes no responsibility for the conversion of this standard to other formats or for incorrect results or damages resulting from its use.

DATE: 7/11/2025 4:40:21 PM
FILE: c:\txdot\pw_online\txdot3\patrick.jalufka\d0807935\ed7-25.dgn

DISCLAIMER:
The use of this standard is governed by the "Texas Engineering Practice Act". No warranty of any kind is made by TxDOT for any purpose whatsoever. TxDOT assumes no responsibility for the conversion of this standard to other formats or for incorrect results or damages resulting from its use.

DATE: 7/11/2025 4:40:34 PM
FILE: c:\txdot\pw_online\txdot3\patrick.jalufka\d0807935\ed9-25.dgn

FRONT VIEW

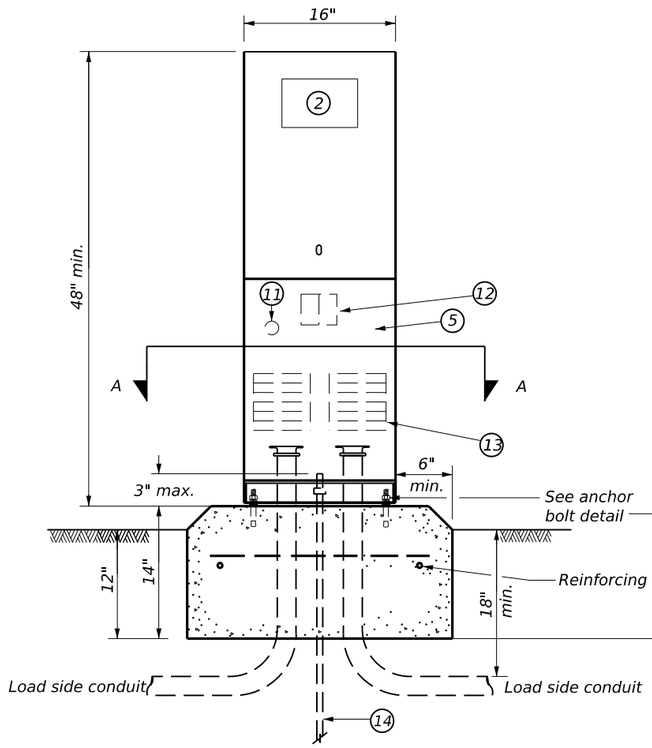

SIDE VIEW

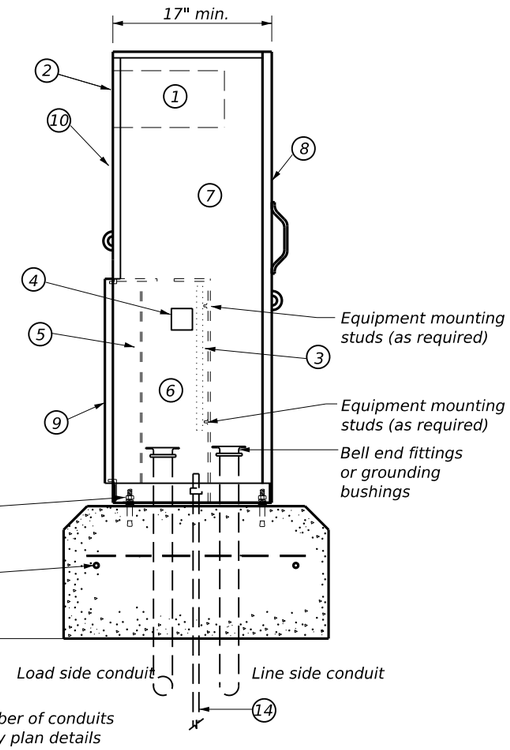

NOTE: Type D shown, Type A similar except that Type A shall have circuit breakers (CB) mounted on an equipment mounting panel. CB handles shall protrude through hinged deadfront trim.

SECTION A-A

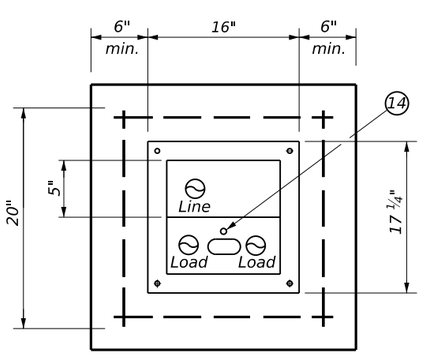

ANCHOR BOLT DETAIL

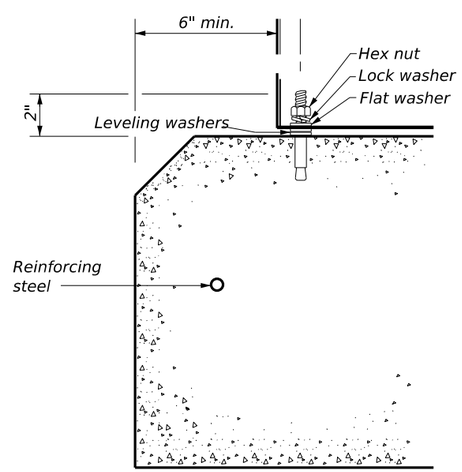

DETAIL CALLOUTS:

1. Meter socket (when required)
2. Meter socket window (when required)
3. Equipment mounting panel
4. Photoelectric control window (when required)
5. Hinged deadfront trim
6. Load side conduit area
7. Line side conduit area
8. Utility access door, with handle
9. Pedestal door
10. Hinged meter access
11. Control station (H-O-A switch)
12. Main disconnect
13. Branch circuit breakers
14. Copper clad ground rod (in load side of cabinet) - 5/8" x 10'

NOTES:

1. Manufacture pedestal electrical services in accordance with Departmental Material Specifications DMS-11080, "Electrical Services," DMS-11085, "Electrical Services-Pedestal (PS)" and Item 628, "Electrical Services." Provide pedestal electrical services listed on the Material Producer list (MPL) under "Roadway Illumination and Electrical Supplies," Item 628. Ensure all mounting hardware and installation details of services meet utility company specifications. Contact the local utility company for approval of pedestal details prior to installing the electrical pedestal service. Submit any changes required by the utility company prior to manufacturing the pedestal enclosure.

2. When a meter socket is required, provide a socket with a 100 amp (minimum) rating that complies with local utility requirements.

3. Provide concrete for pedestal service foundations in accordance with Item 656, "Foundations for Traffic Control Devices" except that concrete will not be paid for directly but is considered subsidiary to Item 628.

4. Provide #4 reinforcing steel for foundations in accordance with Item 440, "Reinforcement for Concrete."

5. Install ½ in. X 2 1/16 in. minimum length concrete single expansion type anchors for mounting pedestal enclosure to foundation. Match anchor location to mounting holes in each corner of enclosure. Secure each of the four corners of the pedestal enclosure to the anchors in the foundation with a ½ in. galvanized or stainless steel machine thread bolt, a properly sized locknut and a flat washer.

6. Finish top of concrete foundation in a professional and skillful manner. If leveling washers are used, ensure no more than ⅛ in. of gap exists at any corner. Do not exceed a maximum dip or rise in the foundation of ⅛ in. per foot. Ensure the top of the service enclosure is level front to back and side to side within ¼ in. Repair rocking or movement of the service enclosure at no additional cost to the Department.

7. Do not use liquidtight flexible metal conduit (LFMC) on pedestal services.

8. Ensure all elbows in the foundation are sized to meet utility provider's conduit requirements for underground conduit and feeders. PVC conduit extensions may be installed provided the ends of the rigid metal conduits are more than 2 in. below the top of the concrete foundation. Where extension conduits are metal, grounding bushings must be installed with a properly terminated bonding jumper.

Texas Department of Transportation

Traffic Safety Division Standard

ELECTRICAL DETAILS PEDESTAL SERVICE TYPE PS

ED(9)-25

FILE: ed9-25.dgn	DN: TxDOT	CK: TxDOT	DW: TxDOT	CK: TxDOT
©TxDOT April 2025	CONT	SECT	JOB	HIGHWAY
REVISIONS	0231	03	156	IH-14
4-98 5-03 12-00 10-14 3-03 4-25	DIST		COUNTY	SHEET NO.
	WACO		BELL	118

71J

NOTES:

1. Provide duct cable in accordance with Departmental Material Specification DMS-11060, "Duct Cable" and Special Specification 6000, "Duct Cable." Provide duct cable as listed on the Material Producer List (MPL) on the Department web site under "Roadway Illumination and Electrical Supplies," Special Specification 6000 - Duct Cable. Provide and install duct cable according to NEC Article 354, Nonmetallic Underground Conduit with Conductors (NUCC).

2. Provide High-Density Polyethylene (HDPE) conduit in accordance with DMS-11030 and Item 618, "Conduit." Provide HDPE as listed on the MPL on the Department web site under "Roadway Illumination and Electrical Supplies," Item 618.

3. Supply duct cable with a minimum 2 in. diameter, unless otherwise shown in the plans. Provide duct cable and HDPE conduit as shown by descriptive code or on the plans. Bend duct cable and HDPE conduit as recommended by the manufacturer, with a minimum bending radius of 26 in. for 2 in. duct. Follow manufacturers' recommendations when handling duct cable and HDPE conduit reels and during installation of duct cable and HDPE conduit.

4. Do not splice conductors within duct cable or HDPE conduit. Couple duct cable and HDPE entering a ground box or foundation to a PVC elbow. When galvanized steel rigid metal conduit (RMC) elbows are called for in the plans and any portion of the RMC elbow is buried less than 18 in. from possible contact, ground the RMC elbow.

5. When conduit casing is called for in the plans, extend duct cable or HDPE conduit through the conduit casing in one continuous length without connection to the casing.

6. Seal the ends of duct cable or HDPE conduit with duct seal, expandable foam, or other approved method after installation.

7. Provide minimum cover of 24 in. under roadways, 18 in. in other locations, or as shown on the plans.

8. Furnish and install listed fittings to couple duct cable or HDPE conduit to other types of conduit. Duct cable and HDPE conduit may be field-threaded and spliced with PVC or RMC threaded couplings; connected with listed tie-wrap fittings; connected using listed couplings made of HDPE with stainless steel external banding clamps and locking rings; connected with approved electrofusion conduit couplings; or connected using an approved chemical fusion method using an epoxy or adhesive specifically designed for HDPE couplings and connectors. Install connectors in accordance with manufacturer's instructions. Do not use PVC glue on HDPE. Do not use water pipe fittings, or connect conduit with heat shrink tubing.

DUCT CABLE/HDPE AT GROUND BOX

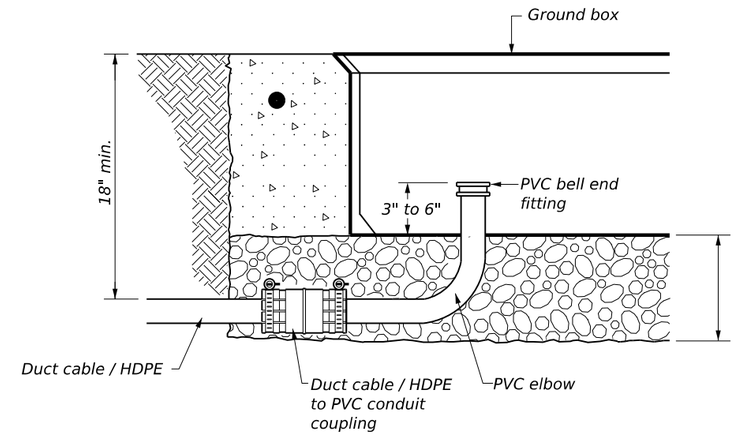

When the upper end of an RMC elbow does not enter the ground box,it may be extended with a SCH-40 PVC conduit nipple and bell end, provided there is a minimum of 18 in. of cover over all parts of the elbow. If not, a rigid extension and ground bushing is required.

Bed of aggregate is to be a minimum of 9 in. deep, placed under and not in the ground box. Ensure the aggregate does not encroach into the interior of the box.

DUCT CABLE / HDPE AT FOUNDATION

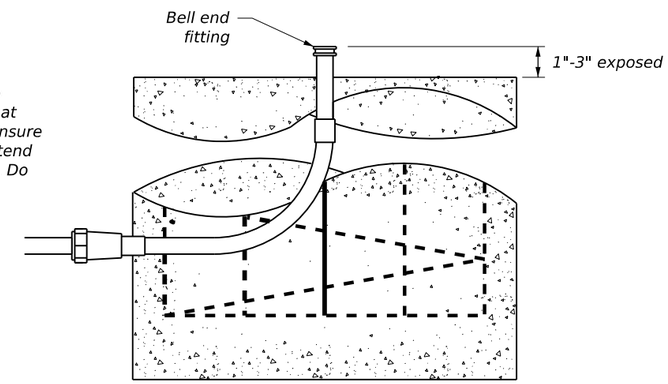

Couple duct to conduit elbow at foundations. Ensure conductors extend into pole base. Do not splice conductors in conduit.

DUCT CABLE / HDPE TO PVC

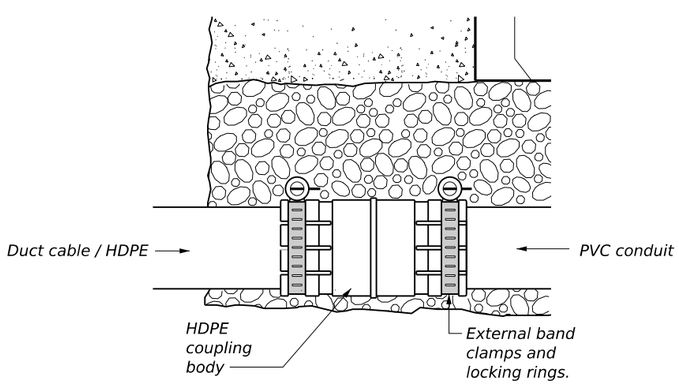

BORE PIT DETAIL

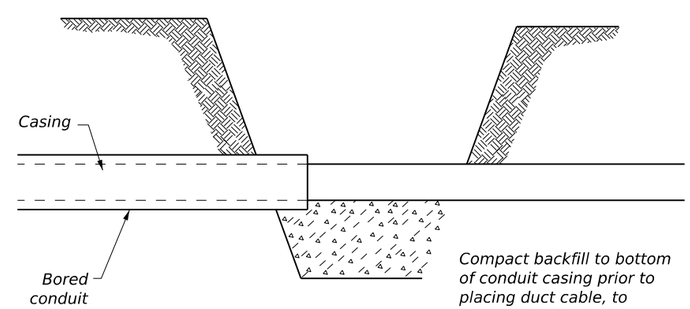

Compact backfill to bottom of conduit casing prior to placing duct cable, to prevent kinking.

Texas Department of Transportation

Traffic Safety Division Standard

ELECTRICAL DETAILS DUCT CABLE/ HDPE CONDUIT

ED(11)-25

FILE: ed11-25.dgn	DN: TxDOT	CK: TxDOT	DW: TxDOT	CK: TxDOT
©TxDOT April 2025	CONT	SECT	JOB	HIGHWAY
REVISIONS	0231	03	156	IH-14
4-98 10-14 12-00 4-25 3-03	DIST		COUNTY	SHEET NO.
	WACO		BELL	119

71L

DISCLAIMER:
The use of this standard is governed by the "Texas Engineering Practice Act". No warranty of any kind is made by TxDOT for any purpose whatsoever. TxDOT assumes no responsibility for the conversion of this standard to other formats or for incorrect results or damages resulting from its use.

DATE: 7/11/2025 4:40:48 PM
FILE: c:\txdot\pw_online\txdot3\patrick.jalufka\d0807935\ed11-25.dgn

DISCLAIMER: The use of this standard is governed by the "Texas Engineering Practice Act". No warranty of any kind is made by TxDOT for any purpose whatsoever. TxDOT assumes no responsibility for the conversion of this standard to other formats or for incorrect results or damages resulting from its use.

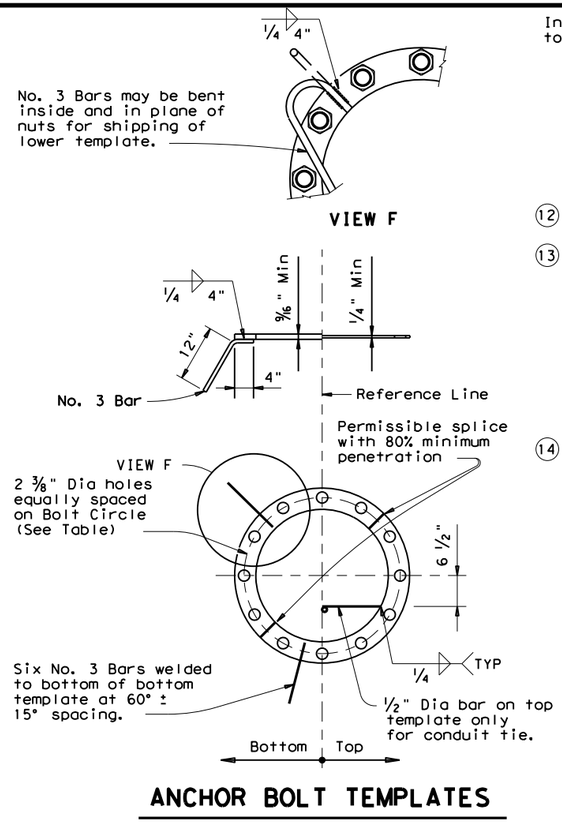

ANCHOR BOLT TEMPLATES

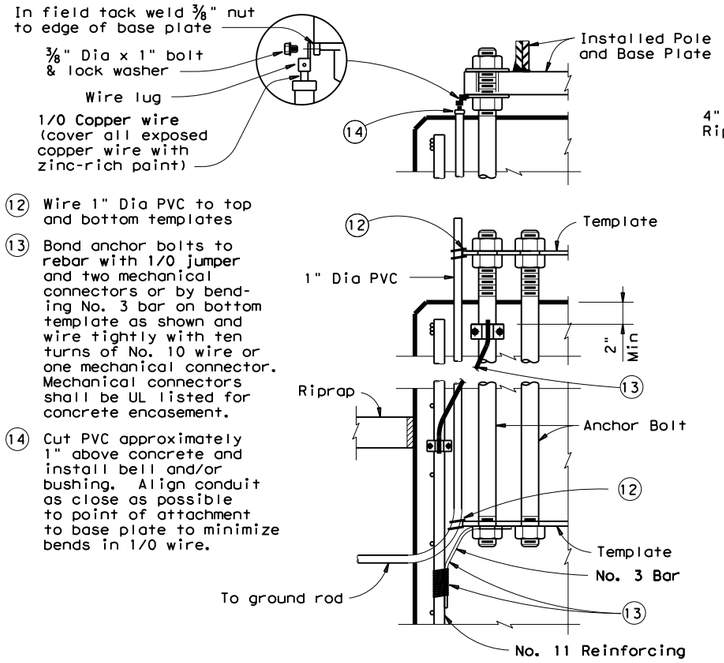

(12) Wire 1" Dia PVC to top and bottom templates

(13) Bond anchor bolts to rebar with 1/0 jumper and two mechanical connectors or by bending No. 3 bar on bottom template as shown and wire tightly with ten turns of No. 10 wire or one mechanical connector. Mechanical connectors shall be UL listed for concrete encasement.

(14) Cut PVC approximately 1" above concrete and install bell and/or bushing. Align conduit as close as possible to point of attachment to base plate to minimize bends in 1/0 wire.

LIGHTNING PROTECTION SYSTEM

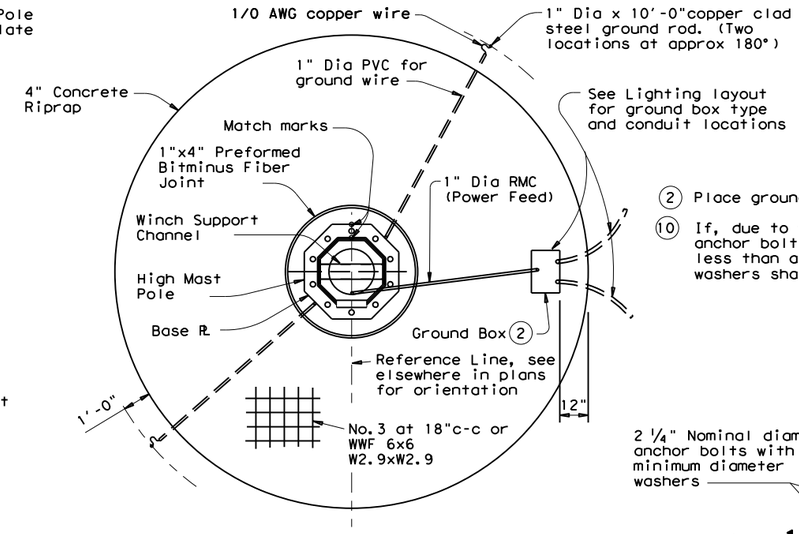

(2) Place ground box cover flush with riprap.

(10) If, due to tolerances in fabrication, the anchor bolt hole to ground sleeve weld is less than approx 7/8", clipped 1/2" thick washers shall be supplied at those

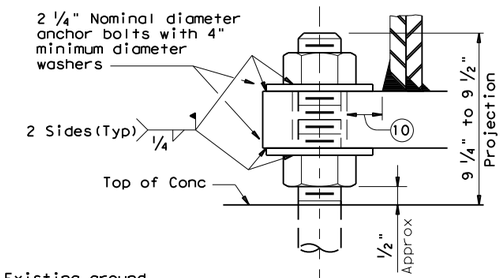

RIPRAP ON SLOPES

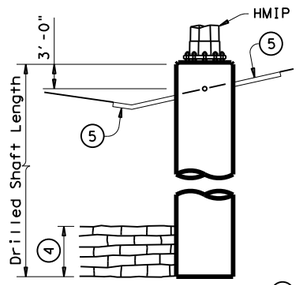

(5) Match slope of finished ground if slope is less than approx 4 to 1. For steeper slopes, bench to provide work area with approx 2 % slope around pole base. Other configurations may be shown elsewhere on the plans.

(4) If rock is encountered, the Drilled Shaft shall extend a minimum of two diameters into solid rock.

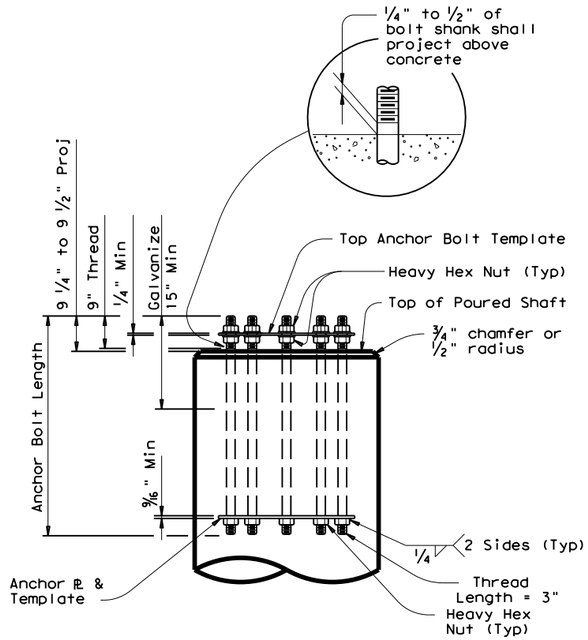

ANCHOR BOLT ASSEMBLY

(See Anchor Bolt Table for number of bolts required)

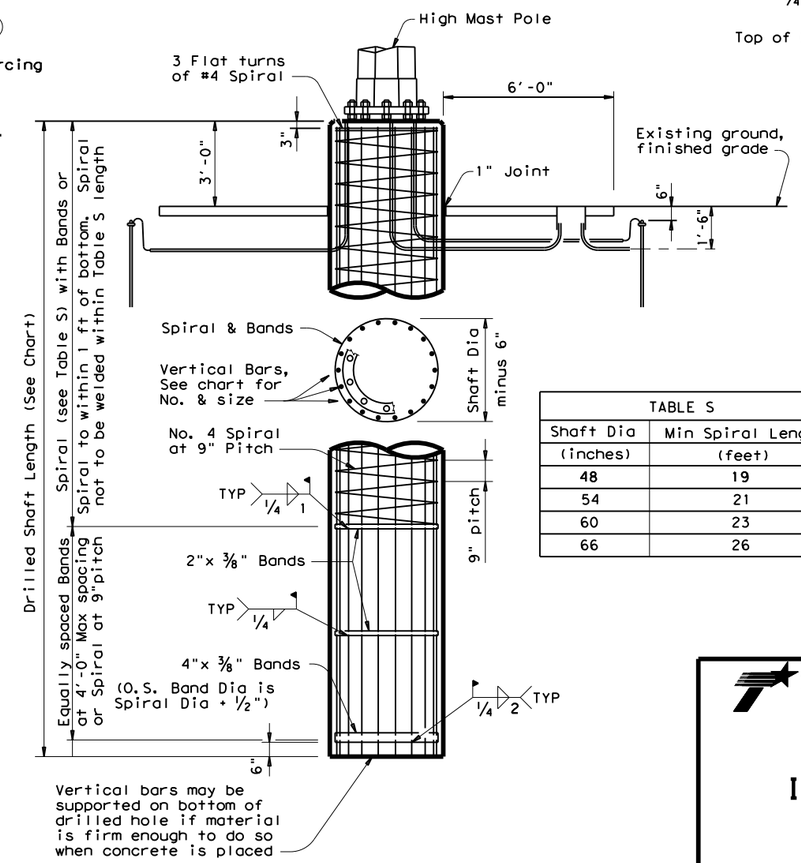

Vertical bars may be supported on bottom of drilled hole if material is firm enough to do so when concrete is placed

TABLE S	
Shaft Dia (inches)	Min Spiral Length (feet)
48	19
54	21
60	23
66	26

DRILLED SHAFT FOUNDATION DETAIL

Texas Department of Transportation
Traffic Operations Division

HIGH MAST ILLUMINATION POLE FOUNDATIONS

SHEET 1 OF 2 HMIF(1)-98

© TxDOT August 1995

DN: TXDOT	CK: TXDOT	DW: TXDOT	CK: TXDOT

REVISIONS
11-97
5-98 - Anchor Bolt Circle Dia

CONT	SECT	JOB	HIGHWAY
0231	03	156	IH-14

DIST	COUNTY	SHEET NO.
WACO	BELL	120

DATE: 7/11/2025 4:41:01 PM
FILE: c:\txdot\pw*online\txdot3\patrick.jalufka\d0807935\hmif98.dgn

DISCLAIMER: The use of this standard is governed by the "Texas Engineering Practice Act". No warranty of any kind is made by TxDOT for any purpose whatsoever. TxDOT assumes no responsibility for the conversion of this standard to other formats or for incorrect results or damages resulting from its use.

(6) Includes normal 3 Ft exposure. Shafts with more than 3 Ft exposure must have additional length.

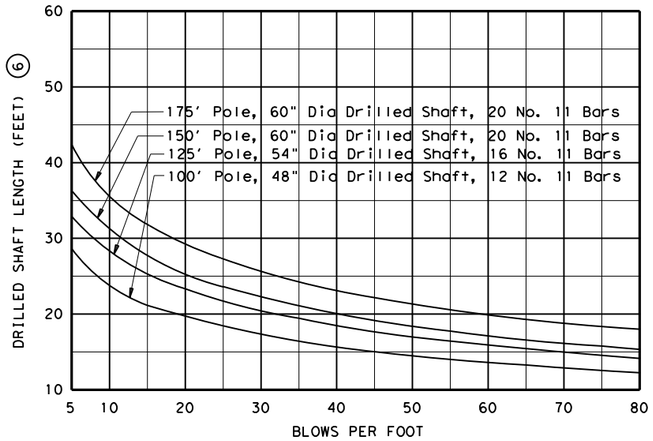

80 MPH POLES

Do not extrapolate below 5 Blows/Ft. A special design will be required for soil less than 5 Blows/Ft.

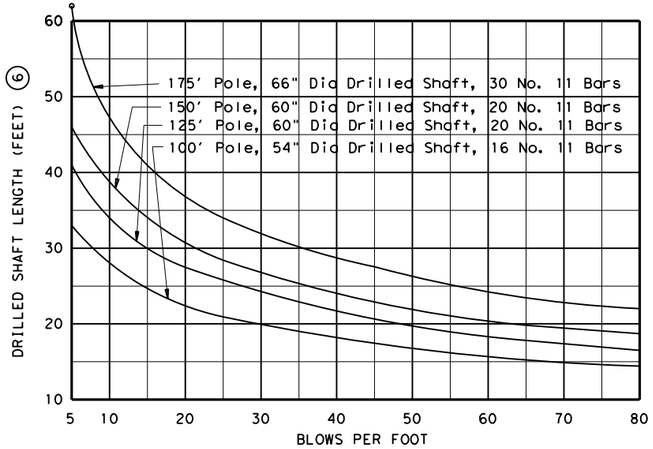

100 MPH POLES

Do not extrapolate below 5 Blows/Ft. A special design will be required for soil less than 5 Blows/Ft.

TEXAS CONE PENETROMETER TEST TABLES

NOTE: Use average "N" value over the top third of the embedded shaft. Ignore the top 2' of soil.

ANCHOR BOLT TABLE

	Pole Height (feet)	Bolt Diameter (inches)	Bolt Length (feet)	Bolt Templates O D (inches)	Bolt Templates I D (inches)	No. of Bolts ~	Bolt Cir Dia (inches)
80 MPH DESIGNS	8 SIDED POLE						
	175	2.25	4.83	45.5	36.5	16	41
	150	2.25	4.83	42.5	33.5	12	38
	125	2.25	4.83	39.5	30.5	8	35
	100	2.25	4.83	35.5	26.5	6	31
	12 SIDED POLE						
	175	2.25	4.83	48.5	39.5	12	44
	150	2.25	4.83	45.5	36.5	10	41
	125	2.25	4.83	40.5	31.5	8	36
	100	2.25	4.83	36.5	27.5	6	32
100 MPH DESIGNS	8 SIDED POLE						
	175	2.25	4.83	50.5	41.5	20	46
	150	2.25	4.83	47.5	38.5	16	43
	125	2.25	4.83	43.5	34.5	12	39
	100	2.25	4.83	38.5	29.5	10	34
	12 SIDED POLE						
	175	2.25	4.83	50.5	41.5	16	46
	150	2.25	4.83	48.5	39.5	12	44
	125	2.25	4.83	44.5	35.5	10	40
	100	2.25	4.83	40.5	31.5	6	36

MISCELLANEOUS QUANTITIES - ONE HMIF

Shaft Diameter	(in) (7)	48	54	60
Concrete Riprap	(CY)	2.33	2.44	2.56
Reinforcing	(Lbs) (8)	94	99	103
Ground Box	(ea)	1	1	1
R O W Marker	(ea) (9)	1	1	1

(7) See elsewhere on plans for length of Drilled Shaft required.
(8) For Contractors information only.
(9) Designated elsewhere on plans if required.

GENERAL NOTES:

Unless otherwise noted, the welded steel bands may be replaced with spiral as shown on the foundation details.

Anchor bolts shall be placed in foundation so there are always two bolts on reference line.

Drilled shaft lengths as determined from the foundation design chart or other acceptable methods are to be as shown elsewhere on the plans.

ODSR may not be used for HMIF drilled shafts.

Concrete for drilled shafts shall be Class C.

Repair welded areas with zinc-rich paint.

All Anchor Bolts, Nuts and Washers shall be galvanized in accordance with Item 445, "Galvanizing".

Texas Department of Transportation
Traffic Operations Division

HIGH MAST ILLUMINATION POLE FOUNDATIONS

SHEET 2 OF 2 HMIF(2)-98

© TxDOT August 1995

DN: TXDOT	CK: TXDOT	DW: TXDOT	CK: TXDOT

REVISIONS
5-98 - Anchor Bolt Circle Dia

CONT	SECT	JOB	HIGHWAY
0231	03	156	IH-14
DIST		COUNTY	SHEET NO.
WACO		BELL	121

78B

DATE: 7/11/2025 4:41:01 PM
FILE: c:\txdot\pw*online\txdot3\patrick.lalufka\d0807935\hmif98.dgn

ROADWAY ILLUMINATION ASSEMBLY NOTES

1. Details apply to roadway lighting installations bid or referenced under Item 610, "Roadway Illumination Assemblies." Provide, furnish, and install all other materials not shown on the plans which may be necessary for complete and proper construction. Where manufacturers provide warranties or guarantees as a customary trade practice, furnish to the State such warranties or guarantees.

2. The locations of poles and fixtures may be shifted by the Engineer to accommodate local conditions. Install or remove poles and luminaires located near overhead electrical lines using established industry and utility safety practices and in accordance with laws governing such work. Consult with the appropriate utility company prior to beginning such work.

3. Provide new and unused materials. Ensure that all materials and installations comply with the applicable articles of the National Electrical Code (NEC),TxDOT standards and specifications, National Electrical Manufacturers Association (NEMA),and are listed by Underwriters Laboratories (UL) or a Nationally Recognized Testing Lab (NRTL). NRTLs such as Canadian Standard Association, Intertek Testing Services NA Inc., or FM Approvals LLC can be considered equivalent to UL. Faulty fabrication or poor workmanship in any material, equipment, or installation is justification for rejection.

4. Provide Roadway Illumination Light Fixtures as per TxDOT Departmental Material Specification (DMS) 11010, Item 610, and as shown on the Material Producers List (MPL) for Roadway Illumination and Electrical Supplies.

5. Fabricate steel roadway illumination poles in accordance with Roadway Illumination Poles (RIP) standards and Item 610. Poles fabricated according to RIP standards do not require shop drawing submittals.

   a. Alternate designs to RIP standards or the use of aluminum to fabricate poles will require the submission of shop drawings electronically. For instructions on submitting shop drawings electronically see "Guide to Electronic Shop Drawing Submittal" on the TxDOT web site.

   b. Limitations on use of the RIP standard: The RIP standard details were developed for installations in locations where the 3-second gust basic maximum wind speed is 110 mph, and where the elevation of the base of the pole is less than (i.e. not more than) 25' above the elevation of the surrounding terrain, in accordance with the "AASHTO Standard Specifications for Structural Supports for Highway Signs, Luminaires and Traffic Signals," 6th Edition (2013) of the AASHTO Design Specifications. For poles to be installed in regions where the maximum basic wind speed exceeds 110 mph or to be mounted more than 25' above the surrounding terrain, provide poles meeting the following requirements:

      i. Submittals. Following the electronic shop drawing submittal process (see Guide to Electronic Shop Drawing Submittal on the TxDOT web site), submit to the Engineer for approval fabrication drawings and calculations for the poles, sealed by a Texas licensed professional engineer (P.E.).

      ii. Luminaire Structural Support Requirements. Provide light poles, arms, and anchor bolt assemblies with a 25 year design life to safely resist dead loads, ice loads and the required basic wind speeds at the location of installation in accordance with the 6th edition (2013) of the AASHTO Design Specifications. For transformer base poles, include transformer base and connecting hardware in calculations and shop drawing submittals. Structurally test all transformer bases to resist the theoretical plastic moment capacity of the pole. Submit certification of the plastic moment load test and FHWA breakaway requirement test of the model of base being furnished with the shop drawings. Show breakaway base model number, manufacturer's name, and logo on shop drawings. Include on manufacturer's shop drawings the ASTM designations for all materials to be used.

6. For both transformer and shoe-base type illumination poles, provide and install double-pole breakaway fuse holders as specified by DMS-11040. Breakaway fuse holders are listed on the MPL for Roadway Illumination and Electrical Supplies under Items 610 & 620. Provide 10 amp time delay fuses for breakaway connectors in light poles, or inside the light fixture for underpass luminaires. In each pole, connect luminaires to the breakaway connector with continuous stranded 12 AWG copper conductors as listed on the MPL. Bond all equipment grounding conductors together and to the ground lug in the transformer base or hand hole.

7. Tighten anchor bolts for shoe base, concrete traffic barrier base, and bridge mount roadway illumination poles, in accordance with Item 449.

8. Install T-Base with following procedure:

   a. Anchor Bolt Tightening.

      i. Coat the threads of the anchor bolts with electrically conductive lubricant.

      ii. Place the T-base over the anchor bolts. Foundation must be level and flat. The maximum permissible gap under any one corner of the t-base is 1/8" before nuts are tightened.

      iii. Coat the bearing surfaces of the nuts and washers with electrically conductive lubricant. Install (1) 1/2" hold down washer, (1) lock washer, and (1) nut on each anchor bolt. Turn the nuts onto the bolts so that each is hand-tight against the washer.

      iv. Using a torque wrench, tighten each nut to 150 ft-lb. Uniform contact is required between the foundation and the T-base in the corner regions of the T-base, and all corner gaps must be closed after applying torque. If a gap still exists after torquing to 150 ft-lbs, continue torquing each bolt incrementally until gap is closed or maximum allowable torque of 250 ft. pound is reached, whichever comes first. If 250 ft-lbs is not enough to close the gap the foundation must be leveled. Gaps along the straight sides of the T-bases and the foundation are permissible. Ensure that no high point of contact occurs between the straight sides of the T-base and the foundation.

      v. Check top of T-base for level. If not level then foundation must be leveled.

   b. Top Bolt Procedure

      i. Erect pole over T-base with crane. Coat bolts, nuts, washers, and lock washers with electrically conductive lubricant.

      ii. Install bolts and 1/2" connecting washers from the inside of the T-base, thread up through the pole base. Install flat washers, lock washers and nuts snug tight according to Item 447, "Structural Bolting."

      iii. Tighten each nut to 150 ft-lb. using a torque wrench.

   c. Level and Plumb

      i. Ensure pole is plumb and mast arm is perpendicular to the roadway according to plans to within 5 degrees.

9. Construct luminaire pole foundations in accordance with Item 416, "Drilled Shaft Foundations," and TxDOT standard sheet RID(2).

10. Provide and install underpass luminaires in accordance with Item 610, DMS-11010, and TxDOT standard sheet RID(3). Typical luminaire size for underpass luminaires is 150W HPS or 150W EQ LED.

11. Mount luminaires on arms level as shown by the luminaire level indicator.

12. Orient luminaires perpendicular to the roadway intended to be lit unless otherwise shown on the plans.

Wiring Diagram Notes:

① Use 1/2 in.-13 UNC threaded, copper or tin-plated copper, pole bonding connector, sized appropriately for conductors, bonded to T-base, or use ground lug in handhole as available.

② Use pre-qualified two-pole breakaway connectors for all luminaire pole installations. For luminaires fed by a circuit with a neutral conductor, use double pole breakaway connectors with the neutral side unfused and marked white.

③ Split Bolt or other connector.

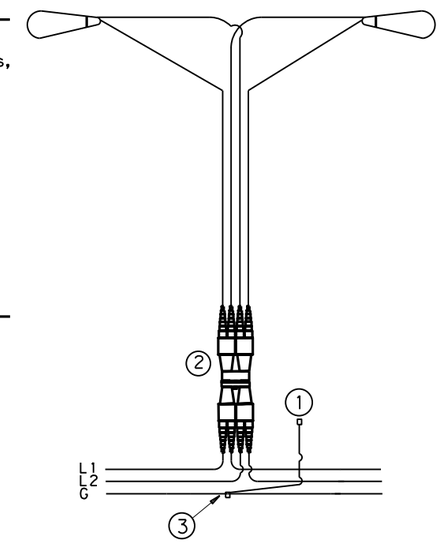

L1,L2 = Hot Conductors
G = Grounding Conductor

TYPICAL WIRING DIAGRAM

LUMINAIRES SERVED AT 480V ON 240/480 VOLT SERVICE OR LUMINAIRES SERVED AT 240V FOR 120/240 VOLT SERVICE.

Decorative LED Lighting Notes:

1. LED Drivers in Remote Outdoor enclosures (for drivers that do not include an enclosure as part of a factory assembly):

   a. Provide NEMA 3R outdoor enclosure or as approved.

   b. Install enclosure at least 12" above ground or other horizontal surface. Mount vertically or on ceiling, and avoid direct sun where possible.

   c. Install drivers with at least 2 inches of space from enclosure walls.

   d. For multiple drivers in an enclosure, provide at least 4 inches side to side and 1 inch end to end from other drivers or electronic equipment

   e. For drivers mounted on back wall of enclosure, mount enclosure on 1 5/8" strut or other standoff to dissipate heat, or mount driver to side of the enclosure or to the metal cover.

   f. Provide remote drivers with a maximum of 100 watts

   g. Provide drivers with documentation of 100,000 hr lifetime at Tcase of 65C or higher.

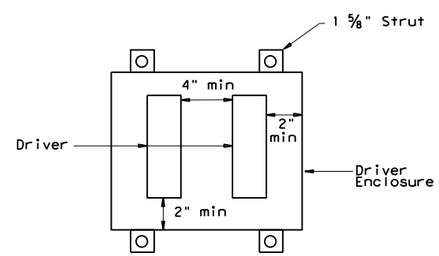

Driver Spacing In Remote Enclosure

Texas Department of Transportation — Traffic Safety Division Standard

ROADWAY ILLUMINATION DETAILS

RID(1)-20

FILE: rid1-20.dgn	DN:	CK:	DW:	CK:
©TxDOT January 2007	CONT	SECT	JOB	HIGHWAY
REVISIONS	0231	03	156	IH-14
7-17	DIST		COUNTY	SHEET NO.
12-20	WACO		BELL	122

72A

DISCLAIMER:
The use of this standard is governed by the "Texas Engineering Practice Act". No warranty of any kind is made by TxDOT for any purpose whatsoever. TxDOT assumes no responsibility for the conversion of this standard to other formats or for incorrect results or damages resulting from its use.

DATE: 7/11/2025 4:41:14 PM
FILE: c:\txdot\pw_online\txdot3\patrick.jalufka\d0807935\rid1-20.dgn

DISCLAIMER:
The use of this standard is governed by the "Texas Engineering Practice Act". No warranty of any kind is made by TxDOT for any purpose whatsoever. TxDOT assumes no responsibility for the conversion of this standard to other formats or for incorrect results or damages resulting from its use.

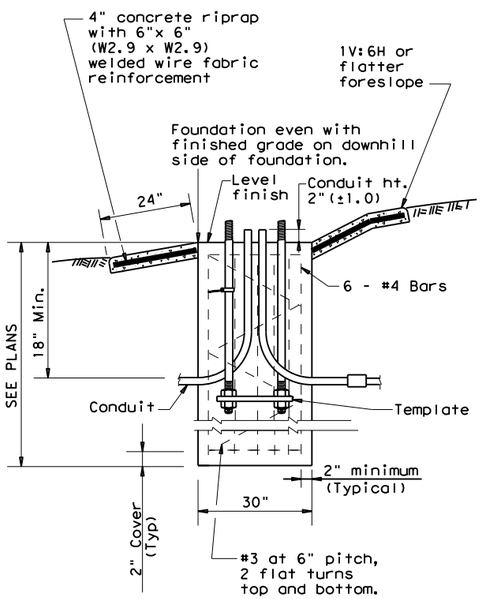

SECTION A-A
SHOWING SLOPED GRADE

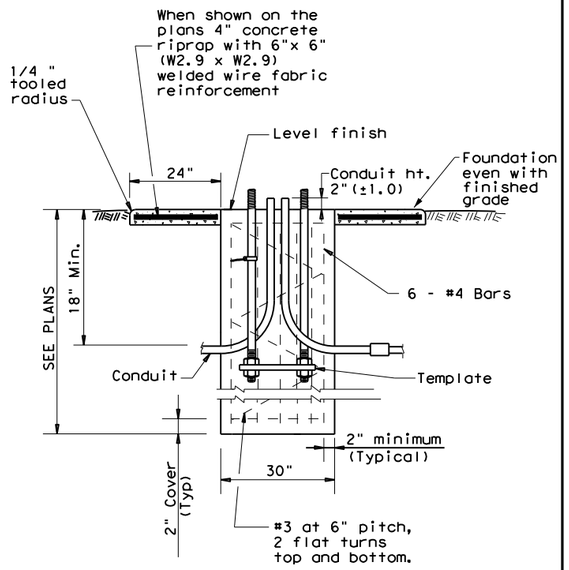

SECTION A-A
SHOWING CONSTANT GRADE

TABLE 1

ANCHOR BOLTS

POLE MOUNTING HEIGHT	BOLT CIRCLE		ANCHOR BOLT SIZE
	Shoe Base	T-Base	
<40 ft.	13 in.	14 in.	1in.x 30in.
40-50 ft.	15 in.	17 1/4in.	1 1/4in. x 30in.

TABLE 2

RECOMMENDED FOUNDATION LENGTHS
(See note 1)

MOUNTING HEIGHT	TEXAS CONE PENETROMETER N Blows/ft		
	10	15	40
≤20 ft.	6′	6′	6′
>20 ft. to 30 ft.	8′	6′	6′
>30 ft. to 40 ft.	8′	8′	6′
>40 ft. to 50 ft.	10′	8′	6′

TABLE 3

PAY QUANTITY OF RIPRAP PER FOUNDATION (Install only when shown on the plans)

Foundation Diameter	RIPRAP DIAMETER	RIPRAP (CONC) (CL B)
30 in.	78 in.	0.35 CY

GENERAL NOTES:

1. "Recommended Foundation Lengths" table is for information purposes only. Foundation lengths shall be as shown on the plans, or as directed by the Engineer. Foundations will be paid for under Item 416, "Drilled Shaft Foundations," unless otherwise shown on the plans.
2. Erect roadway illumination assembly poles plumb and true. Form and level the top 6" of the foundation so the pole will be plumb. Use leveling nuts to plumb shoe base poles. Do not use shims or leveling nuts under transformer bases. Do not grout between baseplate and the foundation.
3. Ensure Class 2A and 2B fit for anchor bolts and nuts. Tap and chase nuts after galvanizing. Anchor bolt body with rolled threads need not be full size.
4. Use appropriate class of concrete as specified in Items 416 and 432. Concrete for riprap may be upgraded to Class C at no extra cost to the Department.
5. Place riprap around the foundation when called for elsewhere in the plans. Riprap will be paid for under Item 432.
6. Locate breakaway roadway illumination assemblies as shown in the placement table, unless otherwise dimensioned on the plans. Protect non-breakaway illumination assemblies from vehicular impact (i.e. 2.5 ft. behind guard rail or mounted on traffic barrier), or located outside the clear zone, except that 2.5 ft. from curb face is minimum desired for light poles on city streets, 45 mph or less. See Roadway Design Manual for further information.
7. Use 4 hold down and 4 connecting washers on transformer base poles as recommended by the manufacturer and supplied with base.
8. Install a minimum of 2 conduits in each foundation. See lighting layout sheets for locations of foundations with more than 2 conduits. Cap unused conduits in foundations on both ends.
9. Conduit location in foundations is critical for breakaway devices. Place conduits 2 in. apart on centerline as shown.
10. Bond anchor bolt to rebar cage with #6 bare stranded copper conductor. Use listed mechanical connectors rated for embedment in concrete. The bonded steel in the foundation creates a concrete encased grounding electrode which replaces the ground rod.
11. Grade earthwork around T-base foundations even with the finished grade as shown in Section A-A to ensure proper function of the breakaway device. Use riprap on T-base foundations that are located on sloped grades, and as shown on the plans for level grades.

TABLE 4

BREAKAWAY POLE PLACEMENT (See note 6)

ROADWAY FUNCTIONAL CLASSIFICATION	** POLE OFFSET (DISTANCE TO FACE OF TRANSFORMER BASE)
Freeway Mainlanes (roadway with full control of access)	15 ft. (minimum and typical) from lane edge
All curbed, 45 mph or less design speed	2.5 ft. minimum (15 ft. desirable) from curb face
All others	10 ft. minimum*(15 ft. desirable) from lane edge

* or as close to ROW line as is practical

** provide 2/5 of the luminaire mounting height behind the pole for "falling area" to prevent encroachment on the other travel lanes. See design guidelines.

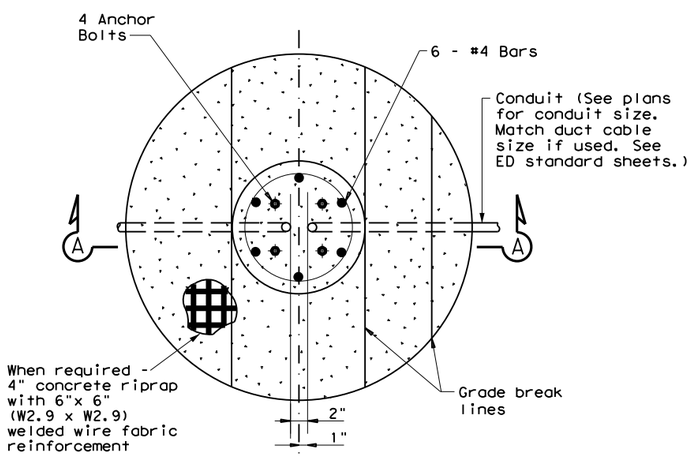

FOUNDATION DETAIL

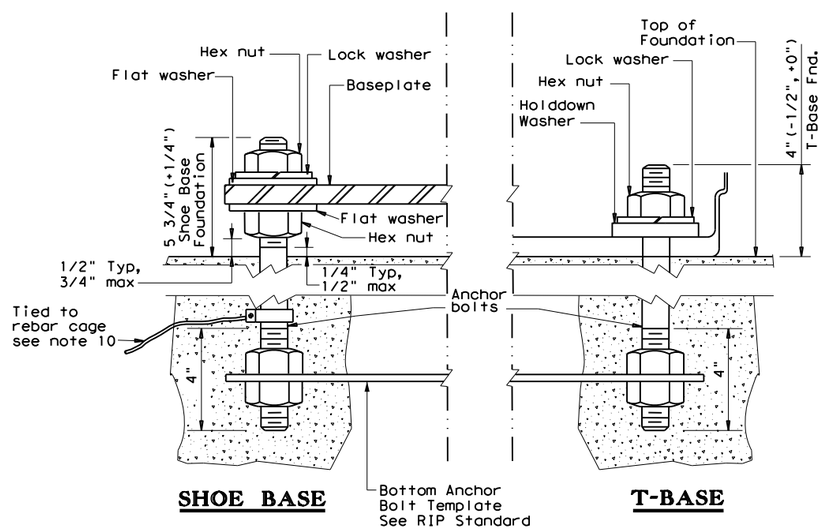

SHOE BASE **T-BASE**

ANCHOR BOLT DETAIL

Texas Department of Transportation — Traffic Safety Division Standard

ROADWAY ILLUMINATION DETAILS
(RDWY ILLUM FOUNDATIONS)
RID(2)-20

FILE: rid2-20.dgn	DN:	CK:	DW:	CK:
© TxDOT January 2007	CONT	SECT	JOB	HIGHWAY
REVISIONS	0231	03	156	IH-14
1-11	DIST		COUNTY	SHEET NO.
7-17	WACO		BELL	123
12-20				

72B

DATE: 7/11/2025 4:41:28 PM
FILE: c:\txdot\pw_online\txdot3\patrick.jalufka\d0807935\rid2-20.dgn

DISCLAIMER:
The use of this standard is governed by the "Texas Engineering Practice Act". No warranty of any kind is made by TxDOT for any purpose whatsoever. TxDOT assumes no responsibility for the conversion of this standard to other formats or for incorrect results or damages resulting from its use.

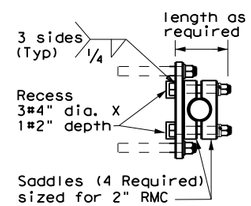

SECTION A-A

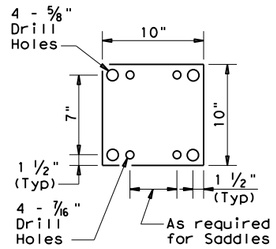

MOUNTING PLATE
(ASTM A-36 or better)

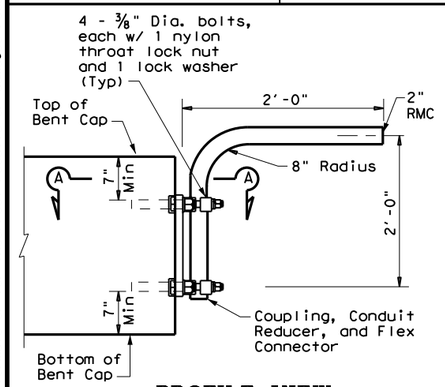

PROFILE VIEW
Or as Required
(See Note A.3)

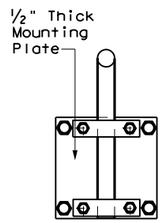

END VIEW

UNDERPASS LIGHTING ARM

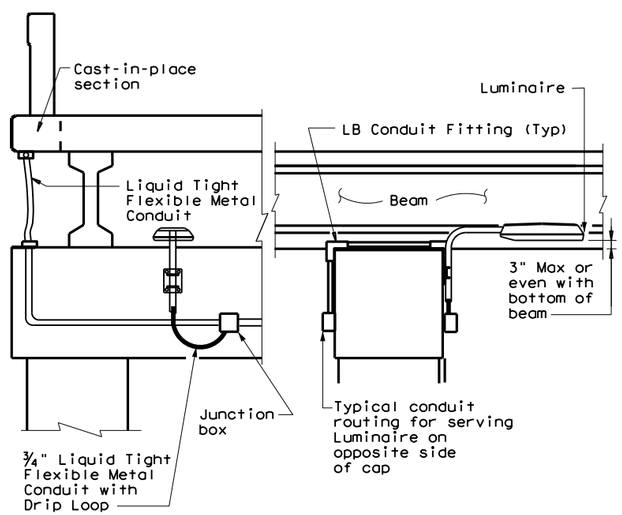

IN RD IL AM (U/P)(TY 1)
If bridge has pre-cast panels under deck, run circuit under deck edge.

UNDERPASS LIGHTING TYPE 1

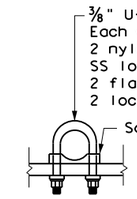

CLAMP DETAIL
(2 Req'd)

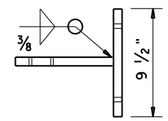

PLAN VIEW

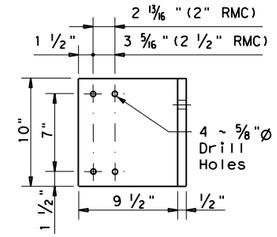

FRONT

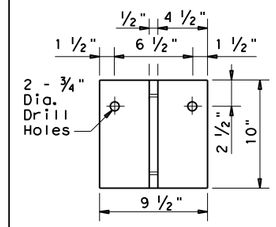

SIDE

BRACKET DETAIL
Make from 1/2" plate (ASTM A-36 or better)

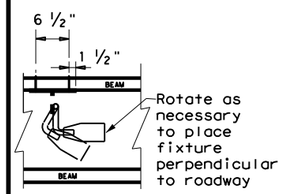

PLAN VIEW

FIXTURE ORIENTATION

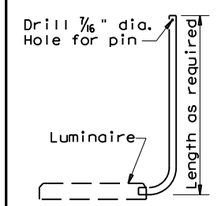

SIDE

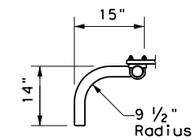

PLAN VIEW

ARM DETAIL

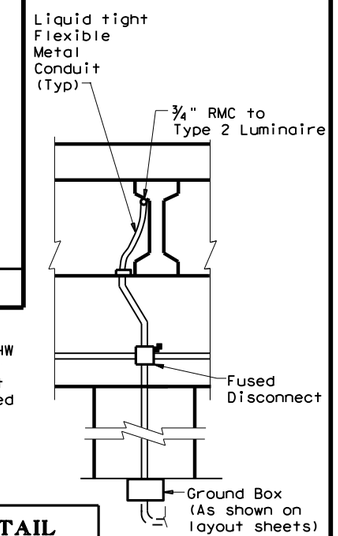

3 - No. 12 XHHW in 3/4" RMC for Branch Circuit runs from fused disconnect to underpass Luminaires

CONDUIT DETAIL

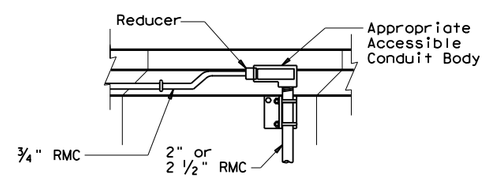

CONDUIT CONNECTION PROFILE

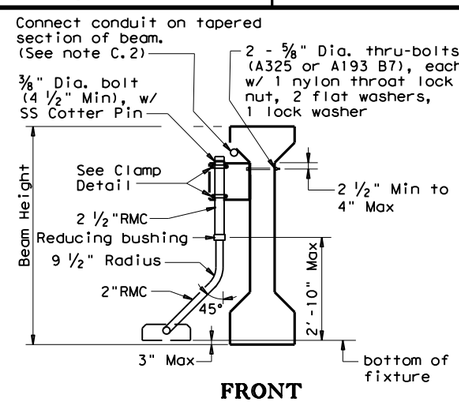

FRONT
(Beam height greater than 54")

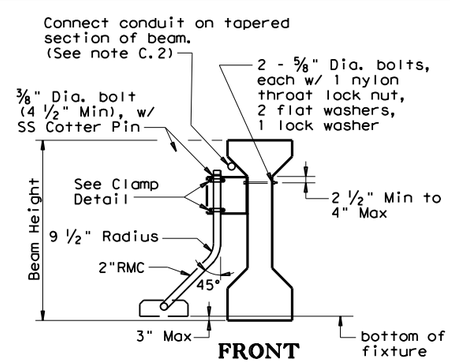

FRONT
(Beam height equal to or less than 54")

IN RD IL AM (U/P)(TY 2)

UNDERPASS LIGHTING TYPE 2

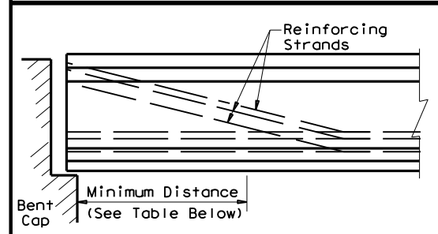

TABLE 5

LOCATION OF UNDERPASS LIGHT MOUNTING BRACKET TABLE

SPAN LENGTH	MINIMUM DISTANCE
≤ 50'	10'-0"
50' - 70'	15'-0"
70' - 90'	20'-0"
> 90'	25'-0"

LOCATION OF UNDERPASS LIGHT MOUNTING BRACKET

GENERAL NOTES:

A. ALL 150 watt HPS and 150 watt equivalent LED Luminaires

1. Luminaire locations, conduit and conductor sizes and routing are typical and diagrammatic only. See project layout sheets for specific details.
2. Conduit will be paid for under Item 618, "Conduit" and conductors will be paid for under Item 620, "Electrical Conductors," unless otherwise shown on the plans.
3. Adjust conduit in saddles to place fixture height and orientation as required. See fixture orientation detail and plans. Where practicable, place luminaires so the bottom of luminaire is above the bottom of the beam, maximum of 3 in. (See detail UNDERPASS LIGHTING ARM TYPE 2)
4. Except as noted, galvanize all structural steel and exposed bolts, nuts, and washers in accordance with Item 445 "Galvanizing".
5. Fabrication of brackets and support arms will not be paid for directly but is subsidiary to Item 610, "Roadway Illumination Assemblies."
6. Install a heavy duty NEMA 3R fused disconnect or breaker enclosure rated at 30 amps and 480 volts to switch underpass luminaires as shown on plans, with at least one per bridge circuit. Install 20 amp time-delay fuses or inverse-time circuit breakers. Mount disconnect or breaker enclosure 10 ft. (min) above grade on columns or bent caps as approved by the Department. Modify disconnect to allow padlocking in the "ON" and "OFF" positions. Padlocks and disconnect switches or circuit breakers for underpass fixtures will not be paid for directly but are subsidiary to the various bid items of the contract.
7. Conduit on columns, caps, and slab is shown surface mounted. For new columns and caps, embed PVC conduit in concrete. Bond and ground metal junction boxes and conduit.

B. TYPE 1

1. Provide 2 in. rigid metal conduit (2.375" O.D., 0.146" wall) for Type 1 arm shaft.
2. Use 3/8 in. stainless steel bolt or stud non-epoxy type expansion anchors for concrete for Type 1 mounting. Except as noted, provide an allowable 2650 lbs minimum pull-out force (after consideration of adjustment factors for edge distance and bolt spacing) for each anchor. Install each anchor to the embedment depth recommended by the manufacturer.
3. Attach conduit to plate with 4 saddles, four - 3/8 in. diameter bolts, nylon throat lock nuts, and lock washers.

C. TYPE 2

1. Provide 2 in. rigid metal conduit (2.375" O.D., 0.146" wall) or provide a combination of 2 1/2 in. (2.875" O.D., 0.193" wall) and 2 in. (2.375" O.D., 0.146" wall) rigid metal conduits with a reducing bushing as beam height stipulated for Type 2 arm shaft. Field cutting and threading will be permitted. Paint cut and threaded areas with zinc rich paint after conduit is connected to adjacent fitting.
2. Connecting conduit may be strapped to tapered section only of precast beams as shown. Anchor as approved by the Engineer. Maximum anchor depth is 1 in.
3. Indiscriminate drilling into precast concrete beams may result in reduced beam strength. Use drilling location and method as directed by the Engineer. See Location of Underpass Lighting Mounting Bracket detail. The locations shown in the table are such that reinforcing strands will not be damaged.

Texas Department of Transportation

Traffic Safety Division Standard

ROADWAY ILLUMINATION DETAILS
(UNDERPASS LIGHT FIXTURES)

RID(3)-20

FILE: rid3-20.dgn	DN: TxDOT	CK: TxDOT	DW: TxDOT	CK: TxDOT
©TxDOT May 2013	CONT	SECT	JOB	HIGHWAY
REVISIONS	0231	03	156	IH-14
2-14 7-17 12-20	DIST		COUNTY	SHEET NO.
	WACO		BELL	124

72C

DATE: 7/11/2025 4:41:42 PM
FILE: c:\txdot\pw_online\txdot3\patrick.jalufka\d0807935\rid3-20.dgn

SHIPPING PARTS LIST - POLES AND LUMINAIRE ARMS

Nominal Mounting Ht. (ft)	Shoe Base Designation Pole	Shoe Base Designation A1	Shoe Base Designation A2	Shoe Base Designation Luminaire	Shoe Base Quantity	T-Base Designation Pole	T-Base Designation A1	T-Base Designation A2	T-Base Designation Luminaire	T-Base Quantity	CSB/SSCB Mounted Designation Pole	CSB/SSCB Mounted Designation A1	CSB/SSCB Mounted Designation A2	CSB/SSCB Mounted Designation Luminaire	CSB/SSCB Mounted Quantity
20	(Type SA 20 S - 4)			(150W EQ) LED		(Type SA 20 T - 4)			(150W EQ) LED						
	(Type SA 20 S - 4 - 4)			(150W EQ) LED		(Type SA 20 T - 4 - 4)			(150W EQ) LED						
30	(Type SA 30 S - 4)			(250W EQ) LED		(Type SA 30 T - 4)			(250W EQ) LED		(Type SP 28 S - 4)			(250W EQ) LED	
	(Type SA 30 S - 4 - 4)			(250W EQ) LED		(Type SA 30 T - 4 - 4)			(250W EQ) LED		(Type SP 28 S - 4 - 4)			(250W EQ) LED	
	(Type SA 30 S - 8)			(250W EQ) LED		(Type SA 30 T - 8)			(250W EQ) LED		(Type SP 28 S - 8)			(250W EQ) LED	
	(Type SA 30 S - 8 - 8)			(250W EQ) LED		(Type SA 30 T - 8 - 8)			(250W EQ) LED		(Type SP 28 S - 8 - 8)			(250W EQ) LED	
40	(Type SA 40 S - 4)			(250W EQ) LED		(Type SA 40 T - 4)			(250W EQ) LED		(Type SP 38 S - 4)			(250W EQ) LED	
	(Type SA 40 S - 4 - 4)			(250W EQ) LED		(Type SA 40 T - 4 - 4)			(250W EQ) LED		(Type SP 38 S - 4 - 4)			(250W EQ) LED	
	(Type SA 40 S - 8)			(250W EQ) LED		(Type SA 40 T - 8)			(250W EQ) LED		(Type SP 38 S - 8)			(250W EQ) LED	
	(Type SA 40 S - 8 - 8)			(250W EQ) LED		(Type SA 40 T - 8 - 8)			(250W EQ) LED		(Type SP 38 S - 8 - 8)			(250W EQ) LED	
	(Type SA 40 S - 10)			(250W EQ) LED		(Type SA 40 T - 10)			(250W EQ) LED		(Type SP 38 S - 10)			(250W EQ) LED	
	(Type SA 40 S - 10 - 10)			(250W EQ) LED		(Type SA 40 T - 10 - 10)			(250W EQ) LED		(Type SP 38 S - 10 - 10)			(250W EQ) LED	
	(Type SA 40 S - 12)			(250W EQ) LED		(Type SA 40 T - 12)			(250W EQ) LED		(Type SP 38 S - 12)			(250W EQ) LED	
	(Type SA 40 S - 12 - 12)			(250W EQ) LED		(Type SA 40 T - 12 - 12)			(250W EQ) LED		(Type SP 38 S - 12 - 12)			(250W EQ) LED	
50	(Type SA 50 S - 4)			(400W EQ) LED		(Type SA 50 T - 4)			(400W EQ) LED		(Type SP 48 S - 4)			(400W EQ) LED	
	(Type SA 50 S - 4 - 4)			(400W EQ) LED		(Type SA 50 T - 4 - 4)			(400W EQ) LED		(Type SP 48 S - 4 - 4)			(400W EQ) LED	
	(Type SA 50 S - 8)			(400W EQ) LED		(Type SA 50 T - 8)			(400W EQ) LED		(Type SP 48 S - 8)			(400W EQ) LED	
	(Type SA 50 S - 8 - 8)			(400W EQ) LED		(Type SA 50 T - 8 - 8)			(400W EQ) LED		(Type SP 48 S - 8 - 8)			(400W EQ) LED	
	(Type SA 50 S - 10)			(400W EQ) LED		(Type SA 50 T - 10)			(400W EQ) LED		(Type SP 48 S - 10)			(400W EQ) LED	
	(Type SA 50 S - 10 - 10)			(400W EQ) LED		(Type SA 50 T - 10 - 10)			(400W EQ) LED		(Type SP 48 S - 10 - 10)			(400W EQ) LED	
	(Type SA 50 S - 12)			(400W EQ) LED		(Type SA 50 T - 12)			(400W EQ) LED		(Type SP 48 S - 12)			(400W EQ) LED	
	(Type SA 50 S - 12 - 12)			(400W EQ) LED		(Type SA 50 T - 12 - 12)			(400W EQ) LED		(Type SP 48 S - 12 - 12)			(400W EQ) LED	

OTHER Designation Pole	A1	A2	Luminaire	Quantity

GENERAL NOTES:

1. All work, materials and services not shown on the plans which may be necessary for complete and proper construction shall be performed, furnished and installed by the Contractor. Faulty fabrication or poor workmanship in any material, equipment or installation will be considered justification for rejection. Where manufacturers provide warranties or guarantees as a customary trade practice, furnish to the Department such warranties or guarantees.

2. The location of poles and fixtures are diagrammatic only and may be shifted by the Engineer to accommodate local conditions. Install or remove poles and luminaires located near overhead electrical lines using established industry and utility safety practices and in accordance with laws governing such work. Consult with the appropriate utility company prior to beginning such work.

3. Standard Steel Pole Designs. Steel poles fabricated in accordance with the details and dimensions shown herein, shall be considered standard designs. Submission of shop drawings and design calculations for standard designs is not required.

4. Optional Steel Pole Designs. Multi-sided steel poles may be allowed as optional designs, if steel poles are permitted or required, pending approval by the Department as outlined below.

   a. Shop Drawings. Optional designs require submission of shop drawings and design calculations bearing the seal of an engineer licensed in the State of Texas, in accordance with Item 441, "Steel Structures." The Department may elect to pre-approve some shop drawings for optionally designed poles. Submission of shop drawings and design calculations is not required for structures fabricated in accordance with the details of shop drawings on the pre-approved list maintained by the TxDOT Traffic Operations Division. Any deviation from the pre-approved shop drawings will require submission of shop drawings of the complete assembly and design calculations as described above.
   b. Structural Support Design for Luminaires. Lighting support structures shall be designed for a 25 year design life in accordance with the AASHTO Standard Specifications for Structural Supports for Highway Signs, Luminaires and Traffic Signals, 6th Edition (2013) and Interim Revisions thereto. All poles shall be designed for 110 mph 3-second gust wind speeds. The Gust Factor, G, and Wind Importance Factor, Ir, shall be applied as per the AASHTO Specifications assuming a 25-year design life. The design wind pressure for hurricane wind velocities greater than 100 mph shall not be less than the design wind pressure using 100 mph with the non-hurricane Wind Importance Factor, Ir, value. For transformer base poles, fabricator shall include transformer base and connecting hardware in design calculations and shop drawing submittals. All transformer bases shall have been structurally tested to resist the theoretical plastic moment capacity of the pole. Certification of the plastic moment load test and FHWA breakaway requirement test of the model of base being furnished shall be submitted with the shop drawings. Shop drawings shall show breakaway base model number, and manufacturer's name and logo. Manufacturer's shop drawings shall include the ASTM designations for all materials to be used.
   c. Mast Arm Attachments. All poles and attachments shall be structurally designed to support two 12-foot mast arms and luminaires. Poles shall be supplied with mast arm combinations as shown in the plans. All mast arms shall be designed for a 60-pound luminaire having an effective projected area of 1.6 square feet.
   d. Anchor Bolt Assembly. Anchor bolt assemblies for optionally designed poles shall be the same as those shown herein.

5. Aluminum Pole Designs. Aluminum pole designs may be allowed, if aluminum poles are permitted or required, pending approval by the Department as outlined below.

   a. Meet all of the requirements stated above for optional steel pole designs and the following:
      1. Aluminum poles shall be fabricated in accordance with "Structural Welding Code-Aluminum" AWS D1.2.
      2. Aluminum pole designs shall use the same anchor bolt assembly and be subject to the same geometric restraints and other requirements for steel poles specified herein.
      3. Aluminum poles shall be equipped with vibration mitigation devices, as approved by the engineer.
      4. Pole components shall be constructed using the following material:
         Shaft: ASTM B221 or B241 Alloy 6063-T6, ASTM B209 Alloy 5086-H34, ASTM B221 Alloy 6005-T5.
         Base Flange: ASTM B26 Alloy 356.0-T6 or ASTM B108 Alloy 356.0-T6 (Yield strength test required).
         Mast Arm Fitting: ASTM B209 Alloy 6061-T6 or ASTM B221 Alloy 6005-T5.
         Mast Arms: ASTM B241 Alloy 6061-T6 or Alloy 6063-T6.
         Pole Cap: ASTM B209 Alloy 5086-H32 or ASTM B108 or B26 Alloy 356.0-T6.
         Bolts: Stainless Steel AISI 300 series. Bolts threading into aluminum threads shall be treated with anti-seize compound, Never-Seez Compound, Permatex 133K or equal.

6. Special Designs. Poles with architectural treatments shall meet the requirements shown elsewhere in the plans.

7. Luminaire Mounting Height. Actual luminaire mounting height shall be the nominal mounting height given on RIP(2) for all pole-arm combinations except for poles with 4 ft. luminaire arms, which shall be 3'-0" lower than the nominal height, unless otherwise shown or directed.

EXPLANATION OF ROADWAY ILLUMINATION ASSEMBLY DESIGNATIONS

(TYPE SA 50 T - X - X) (400W EQ) LED

SA: Pole and mast arm may be steel or aluminum.
ST: Pole and mast arm must be steel.
AL: Pole and mast arm must be aluminum.
SP: Special (ovalized) steel or aluminum pole for installing on CSB or SSCB. See standard sheet CSB (4), or SSCB (4).

Two numerical digits denote nominal mounting height in feet.

Next letter denotes type of base, (S-Shoe Base, T-Transformer Base, or B-Bridge/Ret.Wall Mount)

First number denotes length of mast arm in feet.

Use of second mast arm is indicated by second dashed number which denotes length in feet.

Luminaire rating in watts (i.e. 400W). Equivalent wattage LED fixtures will include EQ (i.e. 400W EQ)

Last letters indicate light source (S - High Pressure Sodium; LED - LED luminaire)

DISCLAIMER:
The use of this standard is governed by the "Texas Engineering Practice Act". No warranty of any kind is made by TxDOT for any purpose whatsoever. TxDOT assumes no responsibility for the conversion of this standard to other formats or for incorrect results or damages resulting from its use.

DATE: 7/11/2025 4:41:56 PM
FILE: c:\txdot\pw_online\txdot3\patrick.jalufka\d0807935\rip(1-4)-19.dgn

SHEET 1 OF 4

Texas Department of Transportation — Traffic Safety Division Standard

ROADWAY ILLUMINATION POLES

RIP(1)-19

FILE: rip-19.dgn	DN:	CK:	DW:	CK:
© TxDOT January 2007	CONT	SECT	JOB	HIGHWAY
REVISIONS 7-17 12-19	0231	03	156	IH-14
	DIST		COUNTY	SHEET NO.
	WACO		BELL	125

73A

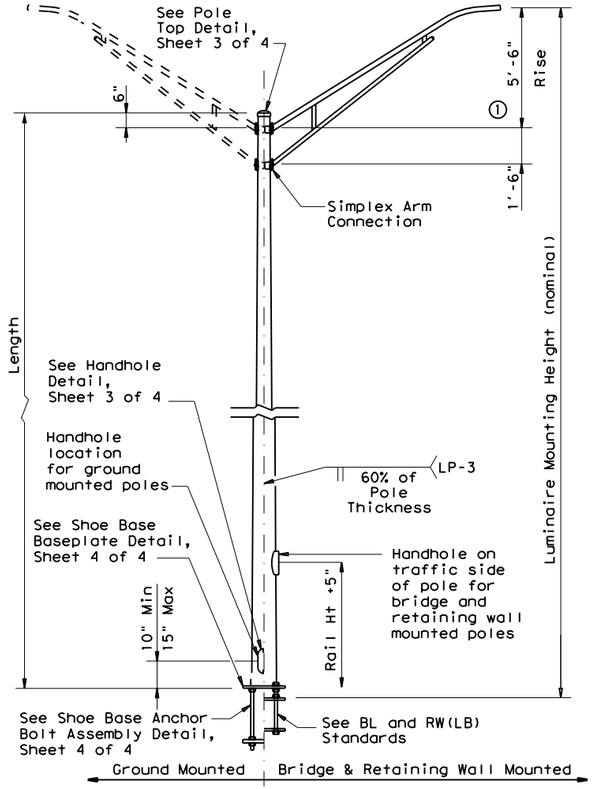

SHOE BASE POLE

SHOE BASE POLE					
Luminaire Mounting Height (Nominal) (ft)	Base Diameter (in)	Top Diameter (in)	Length (ft)	Pole Thickness (in)	Design Moment (K-ft)
20.00	7.00	4.90	15.00	0.1196	7.1
30.00	7.50	4.00	25.00	0.1196	13.2
31.00-39.00	8.00	4.36-3.24	26.00-34.00	0.1196	20.7
40.00	8.50	3.60	35.00	0.1196	20.7
50.00	10.50	4.20	45.00	0.1196	30.3

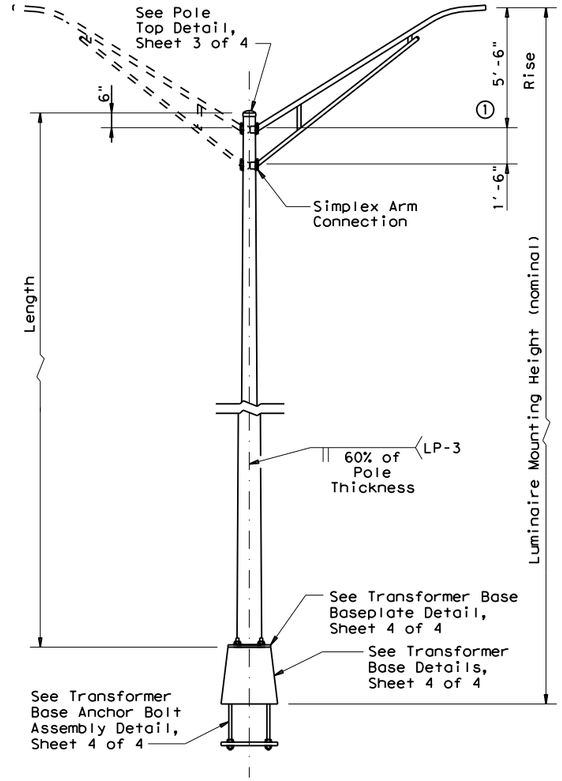

TRANSFORMER BASE POLE

TRANSFORMER BASE POLE					
Luminaire Mounting Height (Nominal) (ft)	Base Diameter (in)	Top Diameter (in)	Length (ft)	Pole Thickness (in)	Design Moment (K-ft)
20.00	7.00	5.11	13.50	0.1196	7.1
30.00	7.50	4.21	23.50	0.1196	13.2
31.00-39.00	8.00	4.57-3.45	24.50-32.50	0.1196	20.7
40.00	8.50	3.81	33.50	0.1196	20.7
50.00	10.00	3.91	43.50	0.1196	30.3

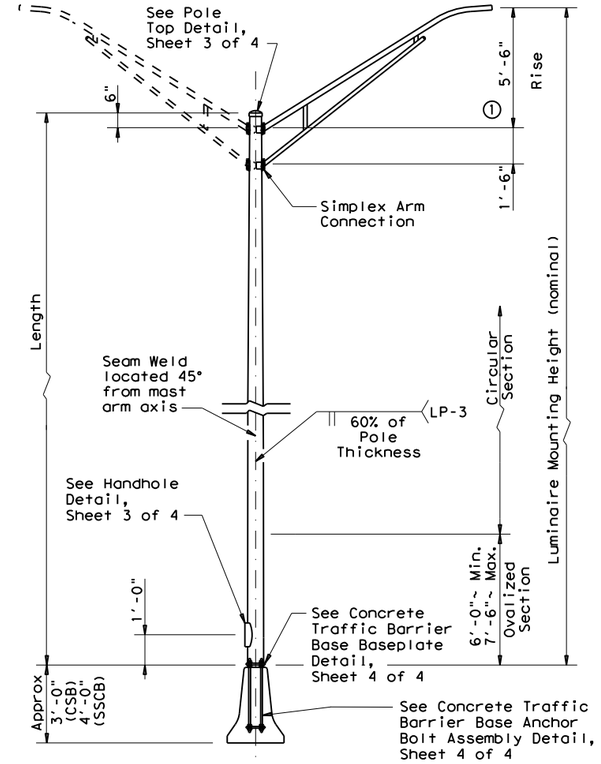

CONCRETE TRAFFIC BARRIER BASE POLE

CONCRETE TRAFFIC BARRIER BASE POLE (CSB/SSCB)						
Luminaire Mounting Height (Nominal) (ft)	Base② Diameter (in)	Top Diameter (in)	Length (ft)	Pole Thickness (in)	Design Moment (K-ft)	
					About ℄ of Rail	Perp. to Rail
28.00	9.00	5.78	23.00	0.1196	10.3	13.2
38.00	9.00	4.38	33.00	0.1196	16.6	20.8
48.00	10.50	4.48	43.00	0.1345	25.1	30.5

MATERIAL DATA

COMPONENT	ASTM DESIGNATION	MIN. YIELD (ksi)
Pole Shaft (0.14"/ft. Taper)	A572 Gr 50, A595 Gr A, A1011 HSLAS Gr 50 Cl 2 ③, or A1008 HSLAS Gr 50 Cl 2	50
Base Plate and Handhole Frame	A572 Gr.50, or A36	36
T-Base Connecting Bolts	F3125 Gr A325	92
Anchor Bolts	F1554 Gr 55, A193-B7 or A321	55 105
Anchor Bolt Templates	A36	36
Heavy Hex (H.H.) Nuts	A194 Gr 2H, or A563 Gr DH	
Flat Washers	F436	

NOTES:

① 2'-6" rise for 4 ft. luminaire arms.

② Before ovalized as shown on Concrete Traffic Barrier Base Baseplate details, Sheet 4 of 4.

③ A1011 SS Gr 50 may be used instead of HSLAS, provided the material meets the elongation requirements for HSLAS.

POLE ASSEMBLY FABRICATION TOLERANCES TABLE

DIMENSION	TOLERANCE
Shaft length	+1"
I.D. of outside piece of slip fitting pieces	+1/8", -1/16"
O.D. of inside piece of slip fitting pieces	+1/32", -1/8"
Shaft diameter: other	+3/16"
Out of "round"	1/4"
Straightness of shaft	±1/4" in 10 ft
Twist in multi-sided shaft	4° in 50 ft
Perpendicular to baseplate	1/8" in 24"
Pole centered on baseplate	±1/4"
Location of Attachments	±1/4"
Bolt hole spacing	±1/16"

GENERAL NOTES:

1. Designs conform to AASHTO Standard Specifications for Structural Supports for Highway Signs, Luminaires, and Traffic Signals , 6th Edition (2013) and Interim Revisions thereto. Design 3-Second Gust Wind Speed equals 110 mph with a 1.14 gust factor. A wind importance factor of 0.80 is applied to adjust the wind speed to a 25 year recurrence interval. Design moments listed in tables assume base of pole is 25' above natural ground level.

2. Structures are designed to support two 12' luminaire mast arms and luminaires. Mast arms are designed to support a 60-pound luminaire having an effective projected area of 1.6 square feet.

3. Fabrication shall be in accordance with the Specifications and with the details, dimensions, and weld procedures shown herein. Do not submit shop drawings for roadway illumination pole assemblies fabricated in accordance with the details, dimensions, and weld procedures shown herein. Weld references call for preapproved weld procedures which the Fabricator must obtain prior to fabrication. Materials, fabrication tolerances, and shipping practices shall meet the requirements of these sheets and the Specifications. In the absence of specified fabrication tolerances, dimensions shall be within the tolerances generally obtainable in normal fabrication practice.

4. For mounting heights between values shown in the tables, use base diameter and thickness values for the larger height.

5. Unless otherwise noted, all steel parts shall be galvanized in accordance with Item 445, "Galvanizing."

6. Steel poles shall be fabricated in accordance with Item 441, "Steel Structures." Longitudinal seam welds for pole sections shall have 60% minimum penetration. All welding shall be in accordance with AWS D1.1, Structural Welding Code-Steel.

7. Two-section poles joined by circumferential welds will not be permitted, unless otherwise shown on the plans. Poles may be fabricated in two sections and field-assembled by the lap-joint method. The two sections shall telescope together with a lap length of not less than 1-1/2 times the shaft diameter at the lap joint.

8. Alternate material equal to or better than material specified may be substituted with the approval of the Engineer.

9. Lubricate and tighten anchor bolts, when erecting shoe base poles and concrete traffic barrier base poles, in accordance with Item 449, "Anchor Bolts."

10. All poles, except Transformer Base Poles, shall have hand holes with reinforcing frames and covers. For ground mounted shoe base poles, hand holes shall be placed 90 degrees to mast arm unless otherwise noted on the plans. For poles mounted on a concrete traffic barrier with one luminaire arm, hand holes shall be located 180 degrees from luminaire arm. For poles mounted on a concrete traffic barrier with two luminaire arms, all hand holes shall be on the same side of the barrier. For poles mounted on a bridge lighting bracket or a retaining wall lighting bracket, hand hole shall be on traffic side of the pole, at a height that will clear the barrier.

11. The finished pole shall have a smooth, uniform finish free of pits, blisters, or other defects. Scratched, chipped, and other damaged galvanized areas on poles and mast arms shall be repaired in accordance with Item 445, "Galvanizing."

12. Pole length is based on a 5'-6" luminaire arm rise. 4 ft. luminaire arms have a 2'-6" rise. A pole with 4 ft. luminaire arms will have an actual mounting height 3'-0" less than the nominal mounting height. Increasing the pole length to meet the nominal mounting height is allowed, but unnecessary unless otherwise directed by the engineer.

13. Erect transformer base poles in accordance with sheet RID(1).

SHEET 2 OF 4

Texas Department of Transportation — Traffic Safety Division Standard

ROADWAY ILLUMINATION POLES

RIP(2)-19

FILE: rip-19.dgn	DN:	CK:	DW:	CK:
©TxDOT January 2007	CONT	SECT	JOB	HIGHWAY
REVISIONS 7-17 12-19	0231	03	156	IH-14
	DIST		COUNTY	SHEET NO.
	WACO		BELL	126

73B

DISCLAIMER:
The use of this standard is governed by the "Texas Engineering Practice Act". No warranty of any kind is made by TxDOT for any purpose whatsoever. TxDOT assumes no responsibility for the conversion of this standard to other formats or for incorrect results or damages resulting from its use.

DATE: 7/11/2025 4:41:56 PM
FILE: c:\txdot\pw_online\txdot3\patrick.jalufka\d0807935\rip(1-41-19.dgn

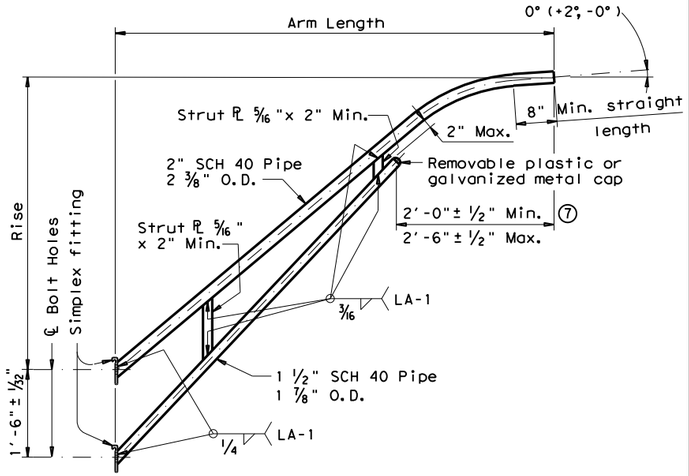

LUMINAIRE ARM

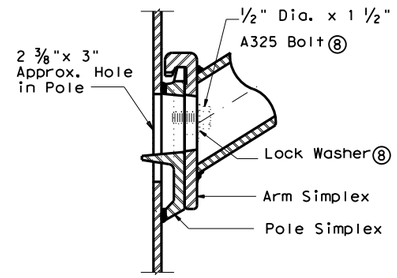

UPPER SIMPLEX FITTING

(Gusset not shown for clarity)

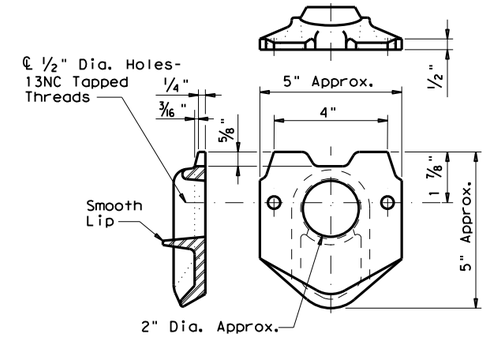

POLE SIMPLEX DETAIL ⑨

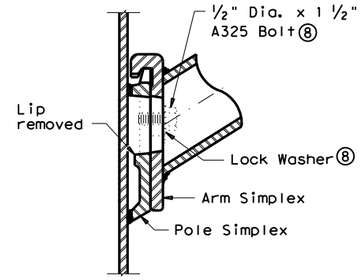

LOWER SIMPLEX FITTING

(Gusset not shown for clarity)

SECTION B-B

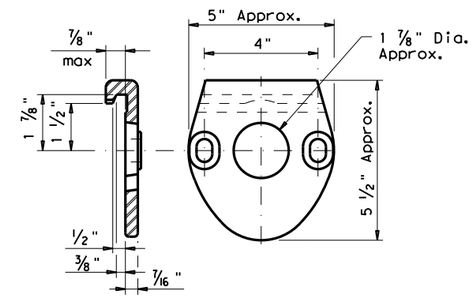

ARM SIMPLEX DETAIL ⑨

NOTES:

④ Any of the materials listed for plates may be used where the drawings do not specify a particular ASTM designation.

⑤ A576 must be suitable for forging and also meet minimum tensile strength of 65 ksi, minimum yield of 35 ksi, and elongation in 2 inches of 22 percent.

⑥ A572, A1008 HSLAS-F, and A1011 HSLAS-F materials may have higher yield strengths but shall not have less elongation than the grade indicated.

⑦ Dimensional limits are given to show acceptable variation in design. All of a Fabricator's production of a particular arm length shall have the same dimensions within specified tolerances.

⑧ Each pole simplex fitting shall be supplied with 2 bolts and 2 lock washers of the size specified. The bolts and lock washers shall be secured to the pole with the other hardware items called for in the plans.

⑨ Proposed deviations in arm simplex dimensions or materials must be submitted to the Department for approval.

⑩ A welded handhole frame is permissible. Maximum of two (2) CJP weld splices is allowed.

MATERIALS	
Pole or Arm Simplex	ASTM A27 Gr 65-35 or Gr 70-36, A148 Gr 80-50, A576 Gr 1021 ⑤, or A36 (Arm only)
Arm Pipes	ASTM A53 Gr A or B, A500 Gr B, A501, A 1008 HSLAS-F Gr 50 ⑥, or A1011 HSLAS-F Gr 50 ⑥
Arm Struts and Gusset Plates ④	ASTM A36, A572 Gr 50 ⑥, or A588
Misc.	ASTM designations as noted

LUMINAIRE ARM DIMENSIONS		
Nominal Arm Length	Arm Length	Rise
4'-0"	3'-6"	2'-6"
6'-0"	5'-6"	5'-6"
8'-0"	7'-6"	5'-6"
10'-0"	9'-6"	5'-6"
12'-0"	11'-6"	5'-6"

ARM ASSEMBLY FABRICATION TOLERANCES TABLE	
DIMENSION	TOLERANCE
Arm Length	±1"
Arm Rise	±1"
Deviation from flat	1/8" in 12"
Spacing between holes	±1/32"

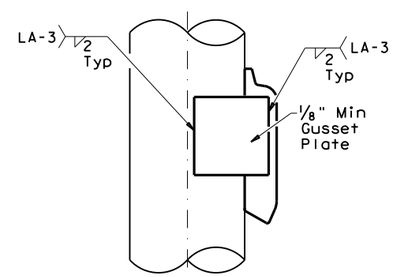

SIDE

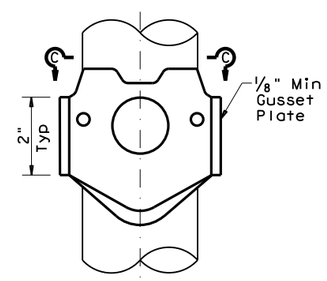

ELEVATION

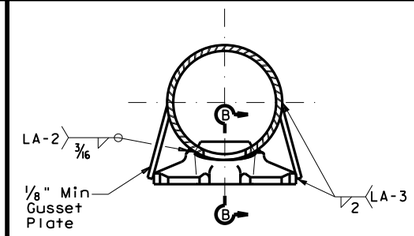

SECTION C-C

SIMPLEX ATTACHMENT DETAIL

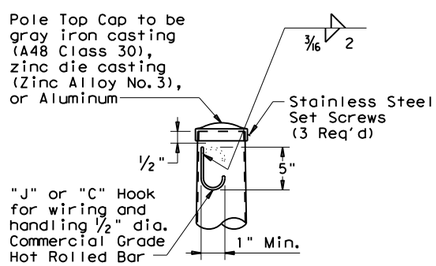

POLE TOP

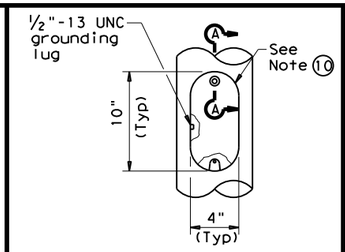

ELEVATION

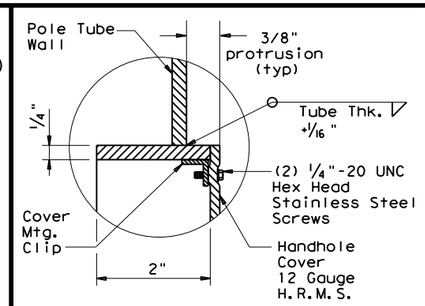

SECTION A-A

HANDHOLE

SHEET 3 OF 4

Texas Department of Transportation — Traffic Safety Division Standard

ROADWAY ILLUMINATION POLES

RIP(3)-19

FILE: rip-19.dgn	DN:	CK:	DW:	CK:
© TxDOT January 2007	CONT	SECT	JOB	HIGHWAY
REVISIONS 7-17 12-19	0231	03	156	IH-14
	DIST		COUNTY	SHEET NO.
	WACO		BELL	127

73C

DISCLAIMER:
The use of this standard is governed by the "Texas Engineering Practice Act". No warranty of any kind is made by TxDOT for any purpose whatsoever. TxDOT assumes no responsibility for the conversion of this standard to other formats or for incorrect results or damages resulting from its use.

DATE: 7/11/2025 4:41:56 PM
FILE: c:\txdot\pw_online\txdot3\patrick.jalufka\d0807935\rip(1-4)-19.dgn

DISCLAIMER:
The use of this standard is governed by the "Texas Engineering Practice Act". No warranty of any kind is made by TxDOT for any purpose whatsoever. TxDOT assumes no responsibility for the conversion of this standard to other formats or for incorrect results or damages resulting from its use.

DATE: 7/11/2025 4:41:56 PM
FILE: c:\txdot\pw_online\txdot3\patrick.jalufka\d0807935\rip(1-4)-19.dgn

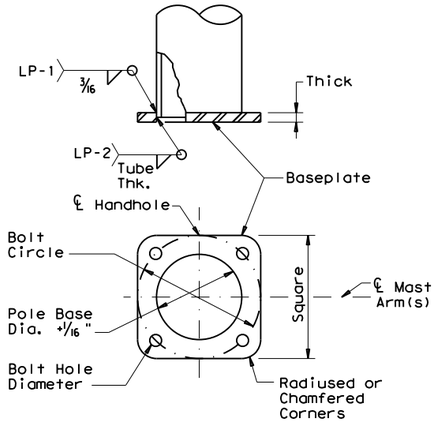

SHOE BASE BASEPLATE

SHOE BASE BASEPLATE TABLE				
MOUNTING HEIGHTS (nominal)	BOLT CIRCLE	SQUARE	THICK	BOLT HOLE DIAMETER
20' - 39'	13"	13"	1 1/4"	1 1/4"
40'	15"	15"	1 1/4"	1 1/2"
50'	15"	15"	1 1/2"	1 1/2"

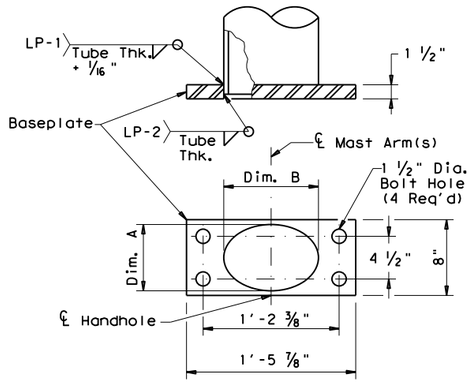

CONCRETE TRAFFIC BARRIER BASE BASEPLATE

CONCRETE TRAFFIC BARRIER BASE BASEPLATE TABLE			
MOUNTING HEIGHTS (nominal)	POLE DIA.(12)	DIM. A	DIM. B
28' - 38'	9"	7"± 1/4"	10"± 1/4"
48'	10 1/2"	7"± 1/4"	13"± 1/4"

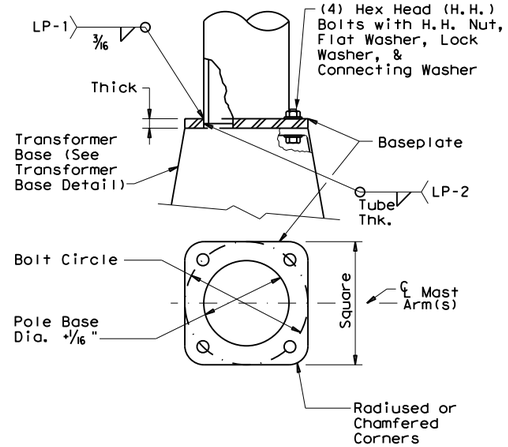

TRANSFORMER BASE BASEPLATE

TRANSFORMER BASE BASEPLATE TABLE						
MOUNTING HEIGHTS (nominal)	BOLT CIRCLE	SQUARE	THICK	CONNECTING BOLT DIA.	BOLT HOLE DIAMETER	TRANSFOMER BASE TYPE
20' - 39'	13"	13"	1 1/4"	1"	1 1/4"	A
40'	15"	15"	1 1/4"	1 1/4"	1 1/2"	B
50'	15"	15"	1 1/2"	1 1/4"	1 1/2"	B

TRANSFORMER BASE TABLE		
TYPE	TOP B.C.	BTM. B.C.
A	13"	14"
B	15"	17 1/4"

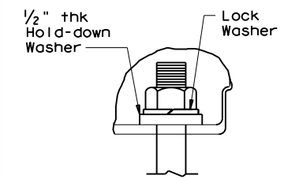

DETAIL A

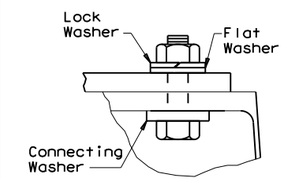

DETAIL B

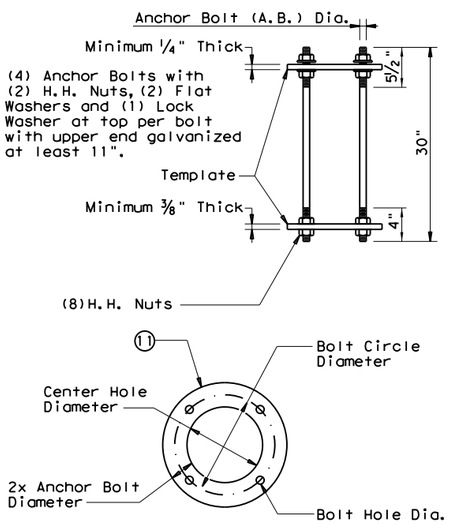

SHOE BASE ANCHOR BOLT ASSEMBLY

SHOE BASE ANCHOR BOLT ASSEMBLY TABLE				
MOUNTING HEIGHTS (nominal)	A.B. Dia.	BOLT CIRCLE DIAMETER	CTR. HOLE DIAMETER	BOLT HOLE DIAMETER
20'-39'	1"	13"	11"	1 1/16"
40'-50'	1 1/4"	15"	12 1/2"	1 5/16"

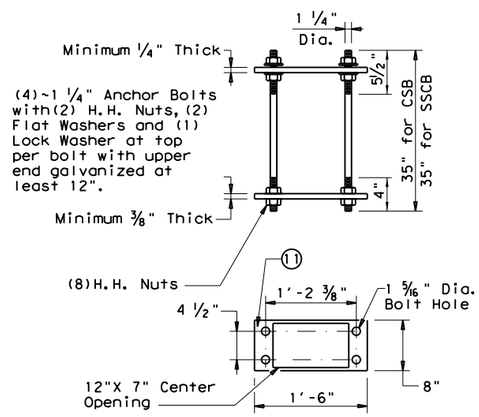

TEMPLATE

CONCRETE TRAFFIC BARRIER BASE ANCHOR BOLT ASSEMBLY

TRANSFORMER BASE ANCHOR BOLT ASSEMBLY TABLE				
MOUNTING HEIGHTS (nominal)	A.B. Dia.	BOLT CIRCLE DIAMETER	CTR. HOLE DIAMETER	BOLT HOLE DIAMETER
20' - 39'	1"	14"	12"	1 1/16"
40' - 50'	1 1/4"	17 1/4"	14 3/4"	1 5/16"

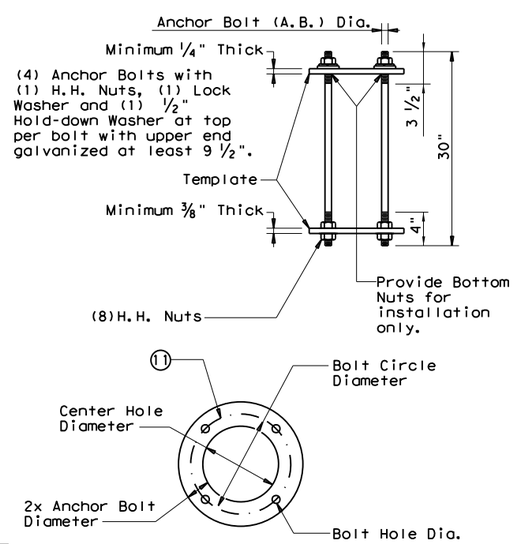

TRANSFORMER BASE ANCHOR BOLT ASSEMBLY

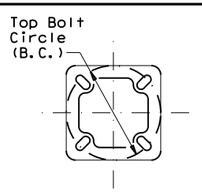

TOP PLAN

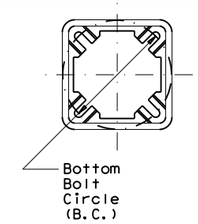

BOTTOM PLAN

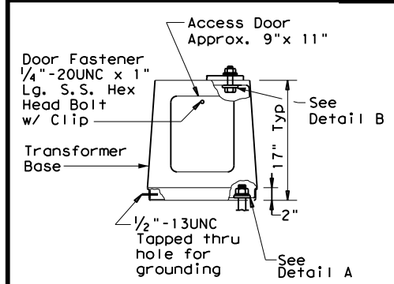

ELEVATION

TRANSFORMER BASE DETAILS

GENERAL NOTES:

1. For mounting heights between those shown in the table, use the values in the table for the larger mounting height.
2. All breakaway bases shall meet the breakaway requirements of the AASHTO Standard Specifications for Structural Supports for Highway Signs, Luminaires and Traffic Signals, 6th Edition (2013) and Interim Revisions thereto, and shall have been tested by FHWA-approved methods. All bases shall have been structurally tested to resist 150% of the design moment.
3. Transformer bases shall be cast from aluminum, ASTM B108 or B26 Alloy 356.0-T6, or other material approved by the Engineer. Four Hex Head (H.H.) bolts with four H.H. nuts, four lock washers, four flat washers, and connecting and hold-down washers as recommended by the manufacturer, galvanized to ASTM A153 Class C or D, or B695 Class 50, shall be provided with each transformer base for connecting the pole. Bolts shall be ASTM A325 or approved equal. Nuts shall be ASTM A563 grade DH galvanized.
4. Bases shall be stamped, incised or by other approved permanent means, marked to show fabricator's name or logo, and model number. Such information shall be placed in a readily seen location, inside or outside the base, but shall not be placed on the door.
5. Doors for transformer bases shall be made of plastic, fiberglass or other non-metallic material approved by the Engineer and shall be attached with stainless steel screws or bolts. Transformer bases shall be cleaned by grit blast cleaning after heat treatment. Certification by the manufacturer of heat treatment shall be furnished with transformer bases. The certification shall show the metal alloy and temper and that the base meets those requirements, chemical and physical. The certification shall also show the material ASTM specification. Transformer bases shall be cast with a removable tab bar for material testing. Some bars may have been removed by the manufacturer for testing.

NOTES:

(11) Anchor Bolt Templates do not need to be galvanized.

(12) Pole diameter before ovalized.

ANCHOR BOLT FABRICATION TOLERANCES TABLE	
DIMENSION	TOLERANCE
Length	± 1/2"
Threaded length	± 1/2"
Galvanized length (if required)	- 1/4"

Texas Department of Transportation — Traffic Safety Division Standard

ROADWAY ILLUMINATION POLES

RIP(4)-19

FILE: rip-19.dgn	DN:	CK:	DW:	CK:
©TxDOT January 2007	CONT	SECT	JOB	HIGHWAY
REVISIONS 7-17 12-19	0231	03	156	IH-14
	DIST		COUNTY	SHEET NO.
	WACO		BELL	128

730

DISCLAIMER:
The use of this standard is governed by the "Texas Engineering Practice Act". No warranty of any kind is made by TxDOT for any purpose whatsoever. TxDOT assumes no responsibility for the conversion of this standard to other formats or for incorrect results or damages resulting from its use.

DELINEATOR - BID ITEM DESCRIPTIONS

XXXXX DEL ASSM (D-XX)SZ X (XXXX)XXXXX(XX)

PAYMENT
- INSTL = Installation
- REPLC = Replacement

NUMBER OF REFLECTORS
- S = Single
- D = Double

COLOR OF REFLECTORS
- W = White
- Y = Yellow
- R = Red

REFLECTOR UNIT SIZE
- SZ 1 or SZ 2 or SZ 5 or SZ 6

TYPE OF POST OR DELINEATOR
- WC = Wing Channel Post
- YFLX = Yellow Flexible Post
- WFLX = White Flexible Post
- BRF = Barrier Reflector

TYPE OF MOUNT
- GND = Ground Embedded (drivable or set in concrete)
- CAB1 or CAB2 or CAB3 = Cable Barrier
- CTB = Concrete Traffic Barrier
- GF1 or GF2 = Guard Fence
- SRF = Surface Mount

IDENTIFICATION
- LL= Low Speed, Low Impact
- HH = High Speed, High Impact

DIRECTION [if required]
- BI = Bi-Directional
- BR = Bi-Directional with red on back

DELINEATOR DEFINITION

Retroreflective devices mounted on the roadway surface or at the side of the roadway in a series to indicate the alignment of the roadway, especially at night or in adverse weather. (See TMUTCD - Part 3, DELINEATORS.)

SINGLE AND DOUBLE MOUNTED DELINEATORS

	SINGLE		DOUBLE	
DEVICE	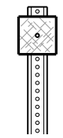 1-Size 2 reflector unit	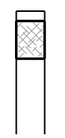 1-Size 1 reflector unit	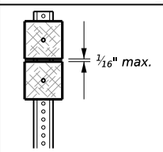 2-Size 2 reflector units	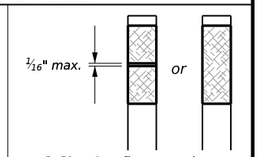 2-Size 1 reflector units or 1-Size 5 reflector unit
POST TYPE	WC	YFLX, WFLX	WC	YFLX, WFLX
MOUNT TYPE	GNDLL	GNDLL, GNDHH, SRFLL, SRFHH	GNDLL	GNDLL, GNDHH, SRFLL, SRFHH

REFLECTOR UNIT DIMENSIONS FOR DELINEATORS

	SIZE 1	SIZE 2	SIZE 5	SIZE 6
DEVICE	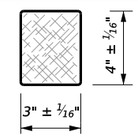	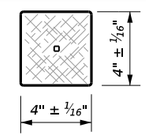	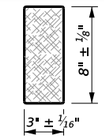	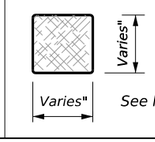 See Note 3
SHEETING	Yellow, White, or Red Type B or C reflective sheeting			
NOTES	1. Size 1 and 5 - Direct applied reflective sheeting for use on flexible post (flx). 2. Size 2 - For use on wing channel (wc) post only. Use approved metal, plastic, or fiberglass backplate with 17/64" mounting holes. 3. Size 6 - For use on cable barrier systems only. Direct applied reflective sheeting. Various dimensions as specified elsewhere in the plans or as defined by the manufacturer.			

POST TYPE AND SUPPORT FOUNDATION DETAILS

WING CHANNEL (WC)

GND

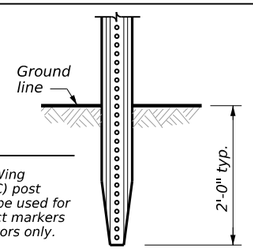

NOTES

1. Embedded Wing Channel (WC) post option may be used for Type 2 object markers and delineators only.
2. 1.12 lbs/ft steel per ASTM A 1011 SS Gr.50, or ASTM A499.

FLEXIBLE POSTS (YFLX, WFLX)

GND | SRF

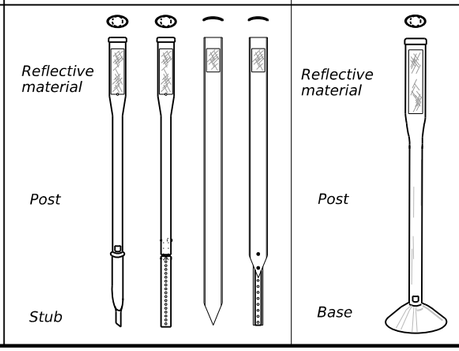

NOTES

1. See "Flexible Delineator and Object Marker Posts" Material Producer List for approved devices.
2. Install per manufacturer's recommendations.
3. Post length may vary to meet field conditions.

DELINEATOR - TYPICAL INSTALLATION

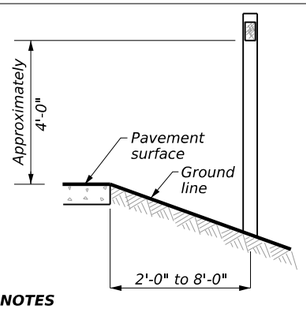

GENERAL NOTES

1. Place delineators on a section of roadway at a consistent distance from the edge of pavement.
2. When delineators are more than 8'-0" from the edge of the pavement, it may not be possible to maintain a height of approximately 4'-0". If this is the case, place the delineator as close to the desired height as possible.
3. Install all delineators and barrier reflectors in accordance with the manufacturer's recommendation.
4. GF1, GF2, and CTB barrier reflectors should be installed a minimum of 18 inches above the edge of the pavement surface.
5. When using yellow delineators with flexible posts to separate opposing direction of travel, such as centerline or median use, the flexible posts shall be yellow.
6. Delineator substrates and sign substrates shall be 0.080" aluminum sign blank and confrom to ASTM B-209 Alloy 6061-T6 or an approved alternative.

DEPARTMENTAL MATERIAL SPECIFICATIONS

FLEXIBLE DELINEATOR & OBJECT MARKER POSTS (EMBEDDED & SURFACE MOUNT TYPES)	DMS-4400
SIGN FACE MATERIALS	DMS-8300
DELINEATORS, OBJECT MARKERS AND BARRIER REFLECTORS	DMS-8600

CHEVRONS

DEVICE	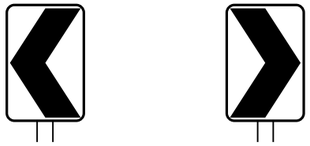			
	W1-8			
SIZE (W x L)	18"x 24" (Conventional)	24"x 30" (Conventional oversize)	30"x 36" (Expressway)	36" x 48" (Freeway)
MOUNTING HEIGHT	4'-0" to 4'-6" or 7'-0" to 7'-6"		7'-0" to 7'-6"	

ONE DIRECTION LARGE ARROW

DEVICE		
	W1-6	
SIZE (W x L)	48"x 24" (Conventional)	60" x 30" (Expressway & Freeway)
MOUNTING HEIGHT	7'-0" to 7'-6"	
NOTES	1. Chevron Alignment (W1-8) signs and One-Direction Large Arrow (W1-6) signs shall be installed per Sign Mounting Details (SMD) Standard Sheets and paid under Item 644 (Small Roadside Sign Assemblies). 2. When there is a need to increase conspicuity, a larger One-Direction Large Arrow (W1-9T) sign may be used in lieu of the typical W1-6 sign.	

CHEVRONS AND ONE DIRECTION LARGE ARROW SIGNS TYPICAL INSTALLATION

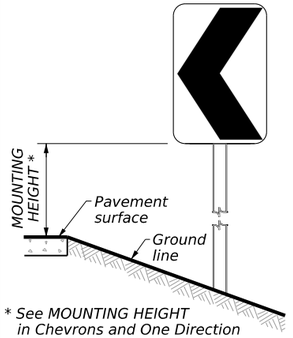

* See MOUNTING HEIGHT in Chevrons and One Direction Large Arrow tables.

BARRIER REFLECTORS (BRF)

	GF1	GF2	CTB	CAB1	CAB2	CAB3
DEVICE	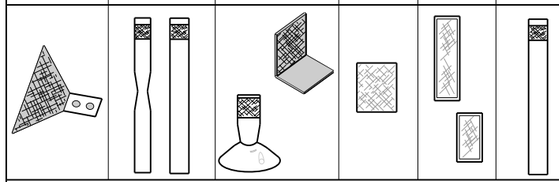					
	1. Barrier reflectors shall meet the requirements of DMS-8600. 2. Approved barrier reflectors are listed on the "Barrier Reflectors" Material Producer List at: www.txdot.gov. 3. GF2 and CAB3 are coded as "YFLX" or "WFLX" instead of "BRF". 4. CAB1, CAB2, and CAB3 are only to be used as replacements. Per Item 543, original installation is to be considered subsidiary to the Cable Barrier System.					
SHEETING	Yellow, White, Red					
NOTE	1. Reflective sheeting shall have a minimum dimension of 3 inches by 3 inches and minimum surface area of 9 square inches.					

BARRIER MOUNT TYPES

GUARD FENCE

GF1 | GF2

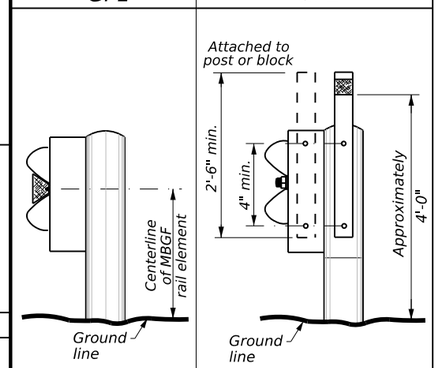

CONCRETE TRAFFIC BARRIER (CTB)

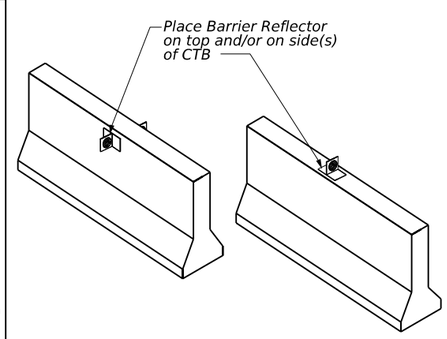

CABLE BARRIER

CAB1 | CAB2 | CAB3

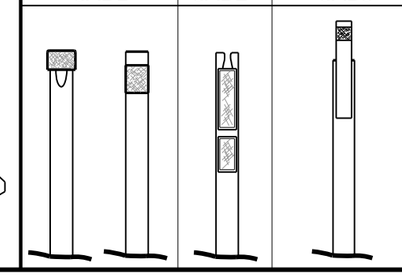

Texas Department of Transportation

Traffic Safety Division Standard

DELINEATOR MATERIAL DESCRIPTION & INSTALLATION

D & OM(1)-25

FILE: dom1-25.dgn	DN: TxDOT	CK: TxDOT	DW: TxDOT	CK: TxDOT
©TxDOT May 2025	CONT	SECT	JOB	HIGHWAY
REVISIONS	0231	03	156	IH-14
8-04 3-15 10-09 7-20 4-10 5-25	DIST		COUNTY	SHEET NO.
	WACO		BELL	129

20A

DATE: 7/11/2025 4:42:09 PM
FILE: c:\txdot\pw_online\txdot3\patrick.lalufka\d0807935\dom1-25.dgn

DISCLAIMER:
The use of this standard is governed by the "Texas Engineering Practice Act". No warranty of any kind is made by TxDOT for any purpose whatsoever. TxDOT assumes no responsibility for the conversion of this standard to other formats or for incorrect results or damages resulting from its use.

OBJECT MARKER - BID ITEM DESCRIPTIONS

XXXXX OM ASSM (OM-XX)(XXXX)XXXXX(XX)

PAYMENT
- INSTL = Installation
- REPLC = Replacement

TYPE OF OBJECT MARKER
- 1, 2, 3, or 4

NUMBER OF REFLECTORS OR DIRECTION
- X = 3-Size 2 reflector units (Type 2 only)
- Y = 1-Size 3 reflector unit (Type 2 only)
- Z = 3-Size 1 or 1-Size 4 reflector unit(s)(Type 2 only)
- L = Left Side (Type 3 Object Marker only)
- R = Right Side (Type 3 Object Marker only)
- C = Center (Type 3 Object Marker only)

TYPE OF POST
- WC = Wing Channel Post
- WFLX = White Flexible Post
- YFLX = Yellow Flexible Post
- TWT = Thin Walled Tubing

TYPE OF MOUNT
- GND = Ground Embedded (drivable or set in concrete)
- SRF = Surface Mount
- WAS = Wedge Anchor Steel
- WAP = Wedge Anchor Plastic

IDENTIFICATION
- LL = Low Speed, Low Impact
- HH = High Speed, High Impact

DIRECTION [if required]
- BI = Bi-Directional

OBJECT MARKER DEFINITION

Devices used to mark obstructions within or adjacent to the roadway. (See TMUTCD - Chapter 2C, WARNING SIGNS AND OBJECT MARKERS.)

	Type 1 (OM-1)	Type 2 (OM-2)			Type 3 (OM-3)			Type 4 (OM-4)
	OM-1	OM-2X	OM-2Y	OM-2Z	OM-3L	OM-3R	OM-3C	OM-4
DEVICE	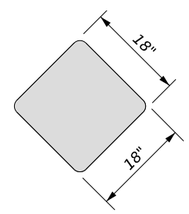	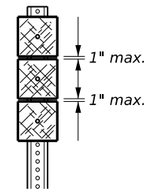 3-Size 2 reflector units	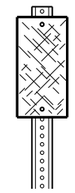 1-Size 3 reflector unit	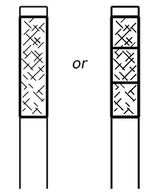 1-Size 4 reflector unit or 3-Size 1 reflector units	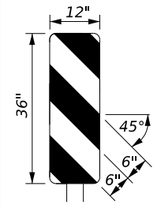	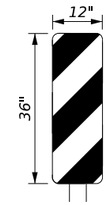	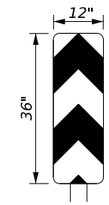	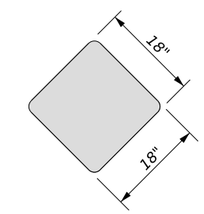
SHEETING	Yellow - Type B_{FL} or C_{FL} sheeting	White and Yellow - Type B or C sheeting			Alternating Acrylic Black and Retroflective Yellow - Type B_{FL} or C_{FL} sheeting			Red - Type B_{FL} or C_{FL} sheeting
POST TYPE	TWT	WC	WC	WFLX, YFLX	TWT, WFLX			TWT
MOUNT TYPE	WAS, WAP	GNDLL	GNDLL	GNDLL, GNDHH, SRFLL, SRFHH	WAS, WAP, GNDLL, GNDHH, SRFLL, SRFHH			WAS, WAP

REFLECTOR UNIT DIMENSIONS FOR OBJECT MARKERS

	SIZE 1	SIZE 2	SIZE 3	SIZE 4
DEVICE	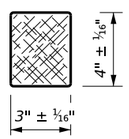	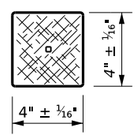	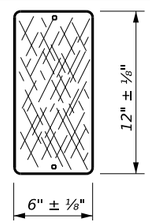	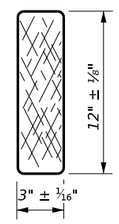
NOTE	1. Size 1 and 4 - Direct applied reflective sheeting for use on flexible post (flx). 2. Size 2 and 3 - For use on wing channel (wc) post only. Use approved metal, plastic, or fiberglass backplate with 17/64" mounting holes.			

POST TYPE AND SUPPORT FOUNDATION DETAILS

WING CHANNEL (WC) — GND

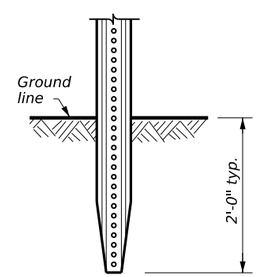

NOTES
1. Embedded Wing Channel (WC) post option may be used for Type 2 object markers and delineators only.
2. 1.12 lbs/ft steel per ASTM A 1011 SS Gr. 50, or ASTM A499.

FLEXIBLE POSTS (YFLX, WFLX) — GND, SRF

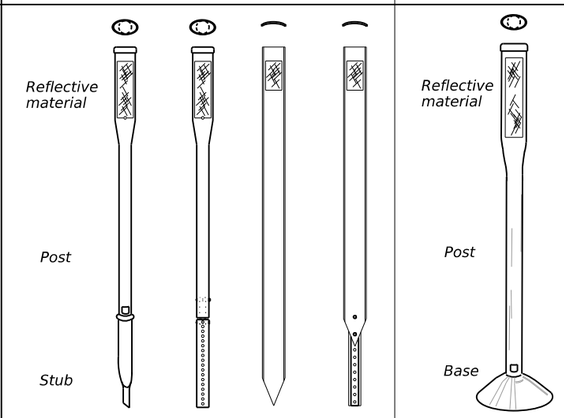

NOTES
1. See "Flexible Delineator and Object Marker Posts" Material Producer List for approved devices.
2. Install per manufacturer's recommendations.
3. Post length may vary to meet field conditions.

WEDGE ANCHOR SYSTEMS — WAS, WAP

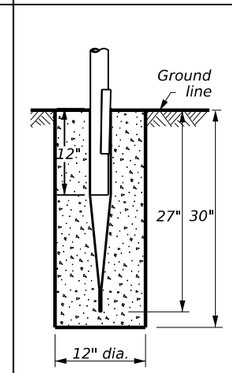

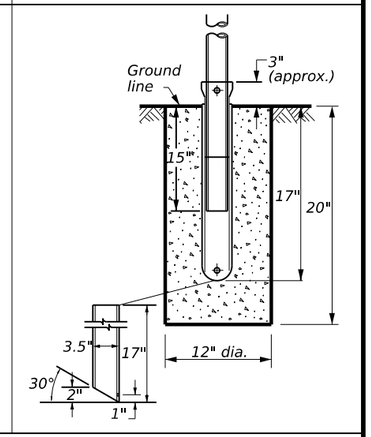

NOTE
1. Install per manufacturer's recommendations.

TYPES 1, 3, AND 4 OBJECT MARKERS TYPICAL INSTALLATION

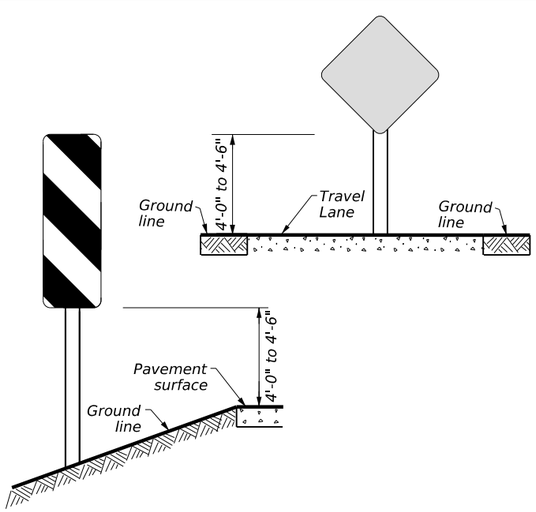

TYPE 2 OBJECT MARKERS TYPICAL INSTALLATION

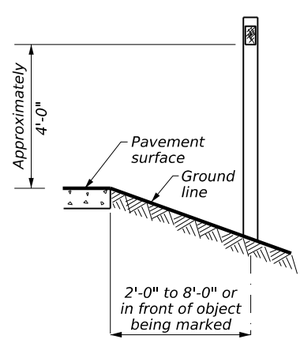

See General Notes 1, 2, and 3

GENERAL NOTES

1. Where a restriction prevents consistent placement from the pavement edge, place the affected object markers in line with the innermost edge of the obstruction.
2. When Type 2 object markers are more than 8'-0" from the edge of the pavement, it may not be possible to maintain a height of approximately 4'-0". If this is the case, place the object marker as close to the recommended height as possible.
3. Install all object markers in accordance with the manufacturer's recommendation.
4. Diagonal stripes on Type 3 object markers shall slope down toward the intended travel lane.
5. Object marker substrates shall be 0.080" aluminum sign blank and conform to ASTM B-209 Alloy 6061-T6 or an approved alternative.

DEPARTMENTAL MATERIAL SPECIFICATIONS	
FLEXIBLE DELINEATOR & OBJECT MARKER POSTS (EMBEDDED & SURFACE MOUNT TYPES)	DMS-4400
SIGN FACE MATERIALS	DMS-8300
DELINEATORS, OBJECT MARKERS AND BARRIER REFLECTORS	DMS-8600

Texas Department of Transportation — Traffic Safety Division Standard

OBJECT MARKER MATERIAL DESCRIPTION & INSTALLATION

D & OM(2)-25

FILE: dom2-25.dgn	DN: TxDOT	CK: TxDOT	DW: TxDOT	CK: TxDOT
©TxDOT May 2025	CONT	SECT	JOB	HIGHWAY
REVISIONS 8-04 5-25, 3-15, 7-20	0231	03	156	IH-14
	DIST		COUNTY	SHEET NO.
	WACO		BELL	130

20B

DATE: 7/11/2025 4:42:23 PM
FILE: c:\txdot\pw_online\txdot3\patrick.jalufka\d0807935\dom2-25.dgn

DISCLAIMER:
The use of this standard is governed by the "Texas Engineering Practice Act". No warranty of any kind is made by TxDOT for any purpose whatsoever. TxDOT assumes no responsibility for the conversion of this standard to other formats or for incorrect results or damages resulting from its use.

DELINEATOR AND OBJECT MARKER APPLICATION AND SPACING

CONDITION	REQUIRED TREATMENT	MINIMUM SPACING
Fwy./Exp. Tangent	RPMs	See PM and FPM standard sheets
Fwy./Exp. Curve	Single delineators on right side	See delineator spacing table
Fwy/Exp.Ramp	Single delineators on at least one side of ramp (should be on outside of curves) (see Detail 4a on D&OM(4))	100 feet on ramp tangents Use delineator spacing table for ramp curves ("straightway spacing" does not apply to ramp curves)
Acceleration/ Deceleration Lane	Double delineators (see Detail 4a on D&OM(4))	100 feet (See Detail 4a on D & OM(4))
Truck Escape Ramp	Single red delineators on both sides	50 feet
Bridge Rail (steel or concrete) and Metal Beam Guard Fence	Bi-Directional Delineators when undivided with one lane each direction Single Delineators when multiple lanes each direction	Equal spacing (100'max) but not less than 3 delineators
Concrete Traffic Barrier (CTB) or Steel Traffic Barrier	Barrier reflectors matching the color of the edge line	Equal spacing 100' max
Cable Barrier	Reflectors matching the color of the edge line Bi-Directional Delineators when within clearzone	Every 5th cable barrier post (up to 100'max)
Cable Barrier Terminus / Impact Head	Object marker on end	Requires reflective sheeting provided by manufacturer per D & OM (VIA) or a Type 3 Object Marker (OM-3) in front of the terminal end See D & OM(6)
Guard Rail Terminus / Impact Head	Divided highway - Object marker on approach end Undivided 2-lane highways - Object marker on approach and departure end	Requires reflective sheeting provided by manufacturer per D & OM (VIA) or a Type 3 Object Marker (OM-3) in front of the terminal end See D & OM(5) and D & OM(6)
Bridges with no Approach Rail	Type 3 Object Marker (OM-3) at end of rail and 3 single delineators approaching rail	See D & OM(5)
Reduced Width Approaches to Bridge Rail	Type 2 and Type 3 Object Markers (OM-3) and 3 single delineators approaching bridge	Requires reflective sheeting provided by manufacturer per D & OM(VIA) or a Type 3 Object Marker (OM-3) in front of the terminal end See D & OM(5)
Culverts without MBGF	Type 2 Object Markers	See Detail 2 on D & OM(4)
Crossovers	Double yellow delineators and RPMs	See Detail 1 on D & OM(4)
Pavement Narrowing (lane merge) on Freeways/Expressway	Single delineators adjacent to affected lane for full length of transition	100 feet

MINIMUM WARNING DEVICES AT CURVES WITH ADVISORY SPEEDS

Amount by which Advisory Speed is less than Posted Speed	Turn/Curve Advisory Speed: Turn (30 MPH or less)	Turn/Curve Advisory Speed: Curve (35 MPH or more)
5 MPH	• RPMs and Pavement Markings	
10 MPH	• Advance Horizontal Alignment Warning Sign with Advisory Speed Plaque; and • RPMs and Pavement Markings	
15 MPH	• Advance Horizontal Alignment Warning Sign with Advisory Speed Plaque; and • RPMs, Pavement Markings, and Delineators; or • RPMs, Pavement Markings, and One Direction Large Arrow sign(s)	• Advance Horizontal Alignment Warning Sign with Advisory Speed Plaque; and • RPMs, Pavement Markings, and Chevrons; or • RPMs, Pavement Markings, and One Direction Large Arrow sign(s) where geometric conditions or roadside obstacles prevent the installation of chevrons
20 MPH	• Advance Horizontal Alignment Warning Sign with Advisory Speed Plaque; and • RPMs, Pavement Markings, and Chevrons; or • RPMs, Pavement Markings, and One Direction Large Arrow sign(s) where geometric conditions or roadside obstacles prevent the installation of chevrons	
25 MPH or more	• Advance Horizontal Alignment Warning Sign with Advisory Speed Plaque; and • RPMs, Pavement Markings, and Chevrons; or • RPMs, Pavement Markings, and One Direction Large Arrow sign(s) where geometric conditions or roadside obstacles prevent the installation of chevrons	• Advance Horizontal Alignment Warning Sign with Advisory Speed Plaque; and • RPMs, Pavement Markings, and Chevrons

NOTE

A roadway is considered to have pavement markings when either a center line, edge lines, or both are present. A roadway is considered to have RPMs when they are used to supplement centerline pavement markings.

SUGGESTED SPACING FOR DELINEATORS ON HORIZONTAL CURVES

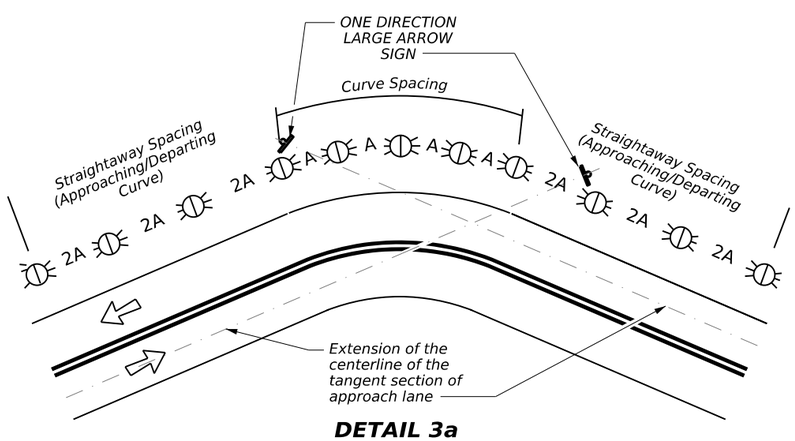

DETAIL 3a

NOTE

ONE DIRECTION LARGE ARROW (W1-6) sign should be located at approximately and perpendicular to the extension of the centerline of the tangent section of approach lane.

LEGEND	
	Delineator
	Bi-directional Delineator
	Sign

GENERAL NOTES

1. Unless otherwise indicated, the delineator or barrier reflector color shall conform to the color of the pavement edge line on the side of the road where the delineators or barrier reflectors are placed.
2. Barrier reflectors may be used to replace required delineators.
3. Single red delineators may be mounted on the back side of delineator posts for wrong way driver applications.

SUGGESTED SPACING FOR CHEVRONS ON HORIZONTAL CURVES

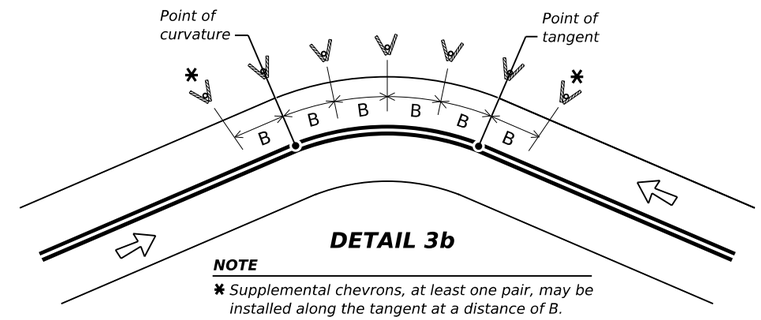

DETAIL 3b

NOTE

✱ Supplemental chevrons, at least one pair, may be installed along the tangent at a distance of B. Adverse curve aligment is a factor in determining if supplemental chevrons are needed.

DELINEATOR AND CHEVRON SPACING

WHEN DEGREE OF CURVE OR RADIUS IS KNOWN

Degree of Curve	FEET: Radius of Curve	Spacing in Curve	Spacing in Straightaway	Chevron Spacing in Curve
		A	2A	B
1	5730	225	450	—
2	2865	160	320	—
3	1910	130	260	200
4	1433	110	220	160
5	1146	100	200	160
6	955	90	180	160
7	819	85	170	160
8	716	75	150	160
9	637	75	150	120
10	573	70	140	120
11	521	65	130	120
12	478	60	120	120
13	441	60	120	120
14	409	55	110	80
15	382	55	110	80
16	358	55	110	80
19	302	50	100	80
23	249	40	80	80
29	198	35	70	40
38	151	30	60	40
57	101	20	40	40

Curve delineator approach and departure spacing should include 3 delineators spaced at 2A. This spacing should be used during design preparation or when the degree of curve is known.

DELINEATOR AND CHEVRON SPACING

WHEN DEGREE OF CURVE OR RADIUS IS NOT KNOWN

Advisory Speed (MPH)	FEET: Spacing in Curve	Spacing in Straightaway	Chevron Spacing in Curve
	A	2A	B
65	130	260	200
60	110	220	160
55	100	200	160
50	85	170	160
45	75	150	120
40	70	140	120
35	60	120	120
30	55	110	80
25	50	100	80
20	40	80	80
15	35	70	40

If the degree of curve is not known, delineator spacing may be determined based on the Advisory Speed of the curve. Use the delineator curve spacing for each Advisory Speed (MPH).

Texas Department of Transportation — Traffic Safety Division Standard

DELINEATOR & OBJECT MARKER PLACEMENT DETAILS APPLICATION & SPACING D & OM(3)-25

FILE: dom3-25.dgn	DN: TxDOT	CK: TxDOT	DW: TxDOT	CK: TxDOT
© TxDOT May 2025	CONT 0231	SECT 03	JOB 156	HIGHWAY IH-14
REVISIONS 8-04 7-20 3-15 5-25 8-15	DIST WACO	COUNTY BELL		SHEET NO. 131

20C

DATE: 7/11/2025 4:42:38 PM
FILE: c:\txdot\pw_online\txdot3\patrick.jalufka\d0807935\dom3-25.dgn

DISCLAIMER:
The use of this standard is governed by the "Texas Engineering Practice Act". No warranty of any kind is made by TxDOT for any purpose whatsoever. TxDOT assumes no responsibility for the conversion of this standard to other formats or for incorrect results or damages resulting from its use.

FREEWAY DELINEATION FOR RAMPS AND ACCELERATION / DECELERATION LANES

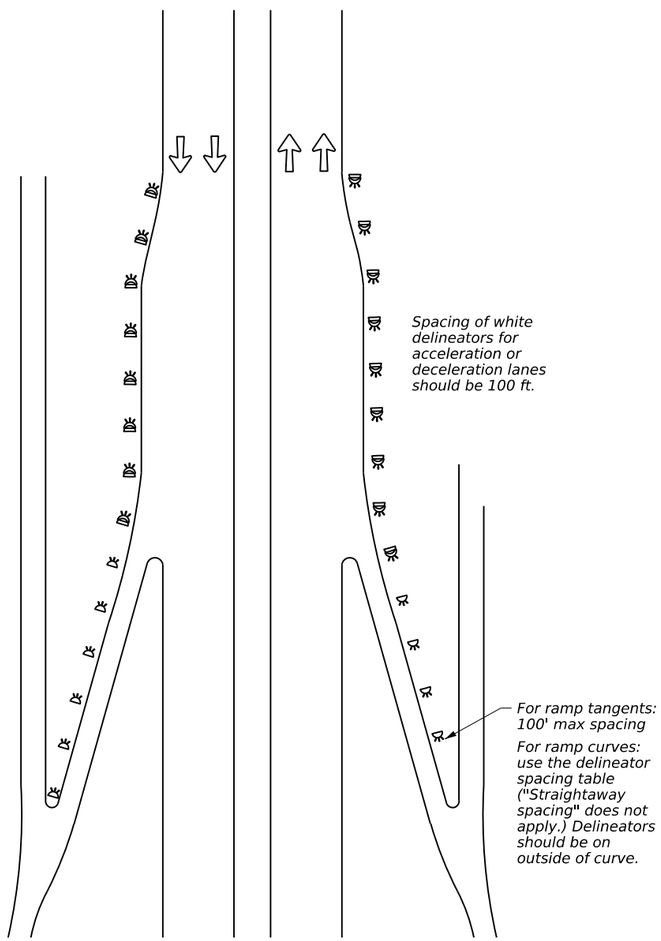

DETAIL 4a

CROSSOVERS

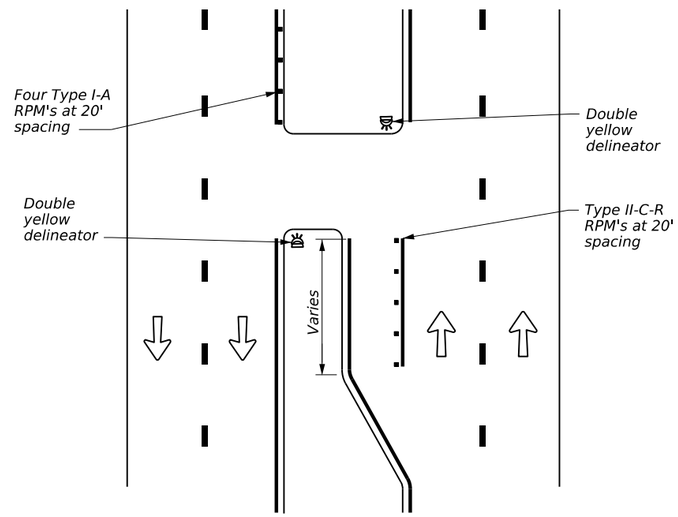

DETAIL 4b

FOR CULVERTS WITHOUT METAL BEAM GUARD FENCE (MBGF)

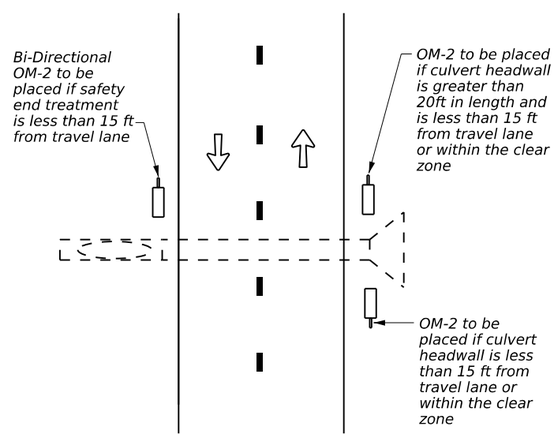

DETAIL 4c

NOTES

1. This detail applies for all existing culverts without MBGF, for application of OMs. New bridge-class culverts require safety end treatments, MBGF, or bridge railing. See the TxDOT Bridge Railing Manual.
2. For culverts with MBGF, see Sheet 5.

TYPICAL APPLICATION OF DEAD END BARRICADE

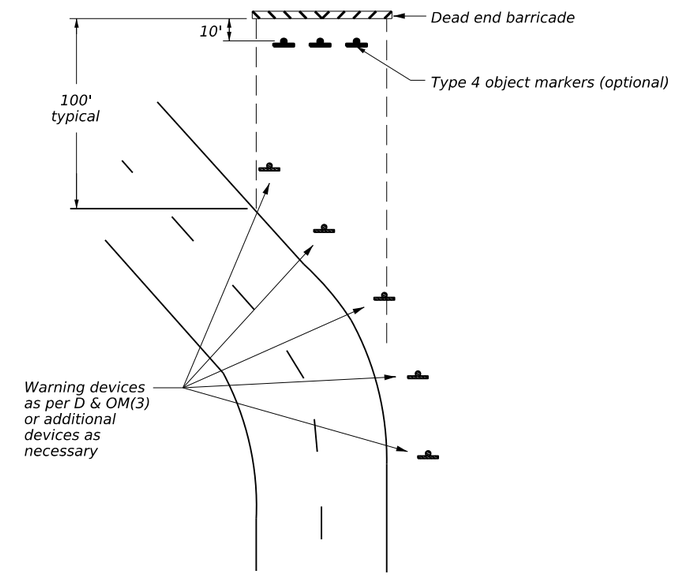

DETAIL 4d

TYPICAL DEAD END BARRICADE INSTALLATION

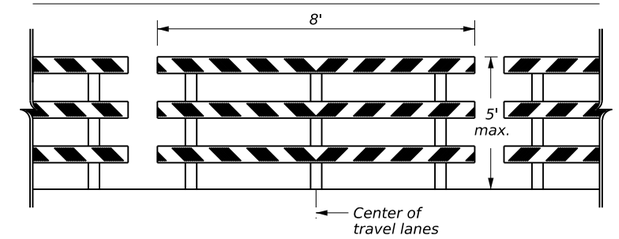

DETAIL 4e

NOTES

1. Barricade striping shall be red and white reflective sheeting for all permanent road closures.
2. Barricade striping is red and white sloping toward the center of the roadway.
3. Type 3 Barricade Supports should be anchored to soil or pavement as described in the Compliant Work Zone Traffic Control Devices list (CWZTCD).

LEGEND

	Delineator
	Double delineator
	OM-2
	Sign
	Raised Pavement Marker (RPM)
	Traffic Flow

Texas Department of Transportation

Traffic Safety Division Standard

DELINEATOR & OBJECT MARKER PLACEMENT DETAILS

D & OM(4)-25

FILE: dom4-25.dgn	DN: TxDOT	CK: TxDOT	DW: TxDOT	CK: TxDOT
© TxDOT May 2025	CONT	SECT	JOB	HIGHWAY
REVISIONS	0231	03	156	IH-14
8-04 5-25 3-15 7-20	DIST	COUNTY		SHEET NO.
	WACO	BELL		132

20D

DATE: 7/11/2025 4:42:51 PM
FILE: c:\txdot\pw_online\txdot3\patrick.jalufka\d0807935\dom4-25.dgn

DISCLAIMER:
The use of this standard is governed by the "Texas Engineering Practice Act". No warranty of any kind is made by TxDOT for any purpose whatsoever. TxDOT assumes no responsibility for the conversion of this standard to other formats or for incorrect results or damages resulting from its use.

TWO-WAY, TWO LANE ROADWAY WITH REDUCED WIDTH APPROACH RAIL

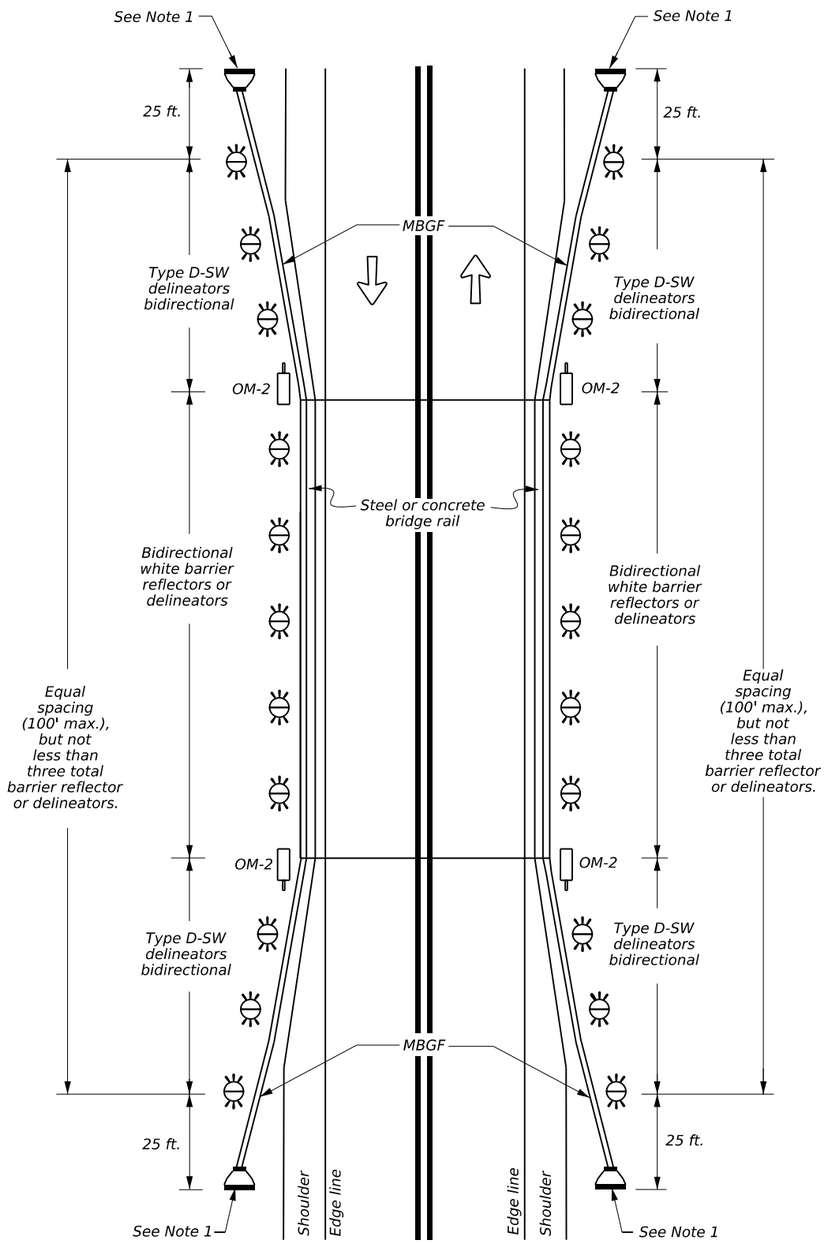

DETAIL 5a

TWO-WAY, TWO LANE ROADWAY WITH METAL BEAM GUARD FENCE (MBGF)

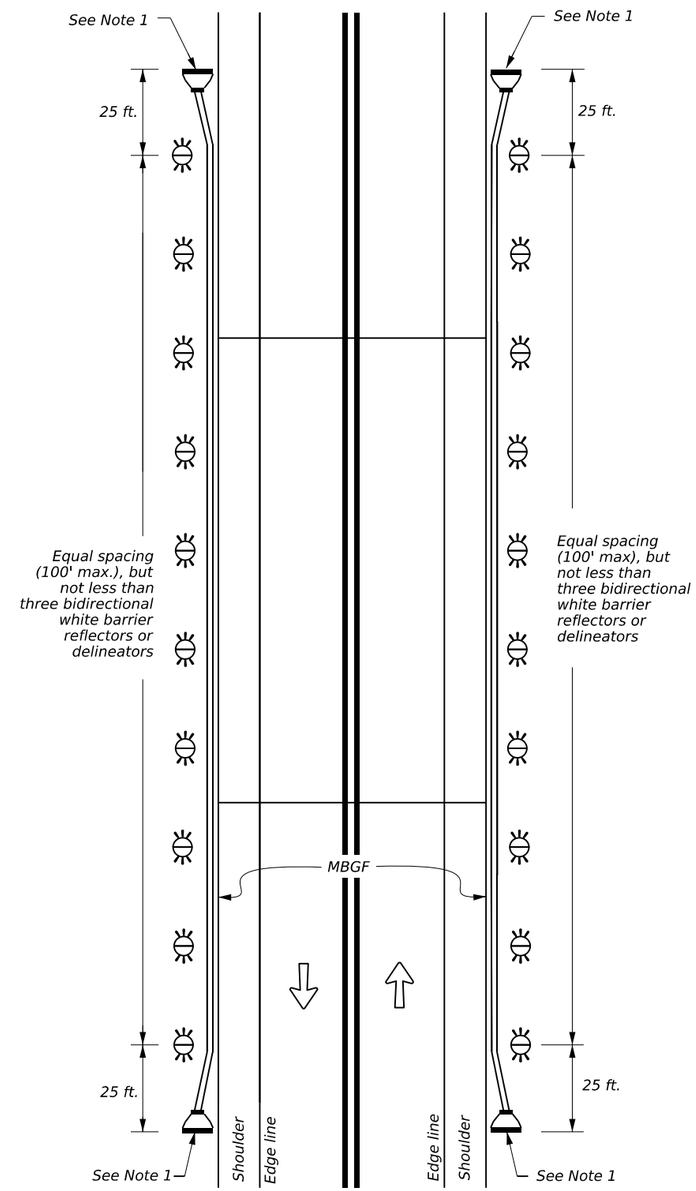

DETAIL 5b

TWO-WAY, TWO LANE ROADWAY BRIDGE WITH NO APPROACH RAIL

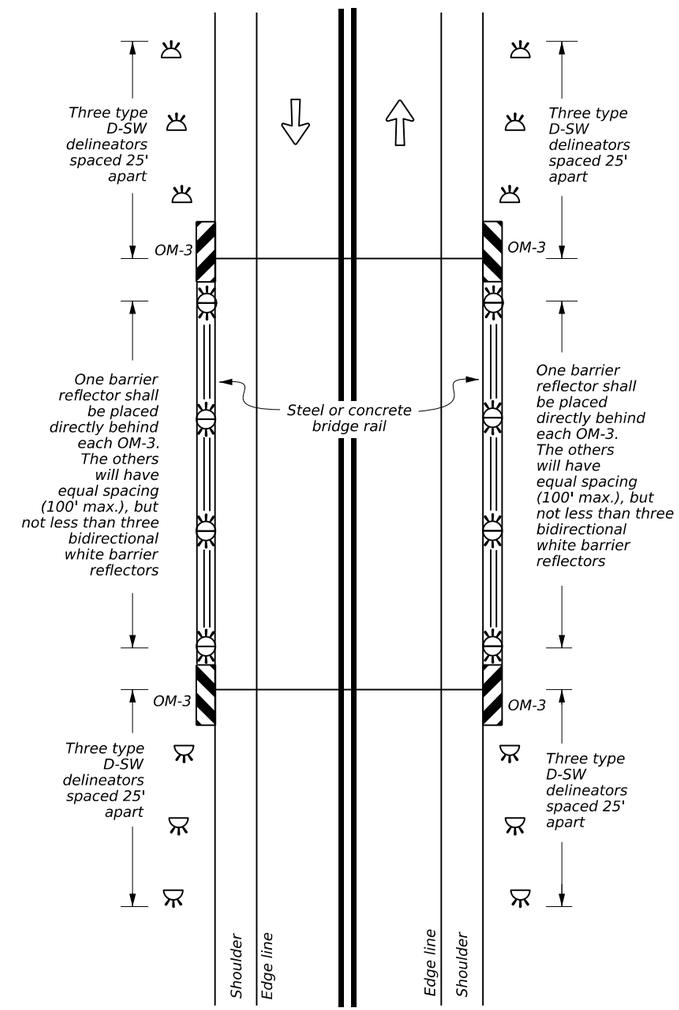

DETAIL 5c

LEGEND

	Delineator
	Bidirectional Delineator
	OM-2
	OM-3
	Terminal End
	Traffic Flow

NOTES

1. Terminal ends require reflective sheeting provided by manufacturer per D&OM(VIA) or a Type 3 object marker (OM-3) in front of the terminal end.
2. Bridge-class culverts may require OMs on or in advance of culvert headwalls. Refer to the TxDOT Roadway Design Manual and the TMUTCD.

GENERAL NOTE

Delineators (D) indicate roadway alignment. Object Markers (OM) identify obstructions. See D and OM definitions on D&OM(1) and D&OM(2), respectively.

Texas Department of Transportation

Traffic Safety Division Standard

DELINEATOR & OBJECT MARKER PLACEMENT DETAILS
(BRIDGE & BRIDGE-CLASS CULVERTS)
D & OM(5)-25

FILE: dom5-25.dgn	DN: TxDOT	CK: TxDOT	DW: TxDOT	CK: TxDOT
© TxDOT May 2025	CONT	SECT	JOB	HIGHWAY
REVISIONS	0231	03	156	IH-14
8-15	DIST		COUNTY	SHEET NO.
7-20	WACO		BELL	133
5-25				
20E				

DATE: 7/11/2025 4:43:05 PM
FILE: c:\txdot\tpw_online\txdot3\patrick.jalufka\d0807935\dom5-25.dgn

DISCLAIMER:
The use of this standard is governed by the "Texas Engineering Practice Act". No warranty of any kind is made by TxDOT for any purpose whatsoever. TxDOT assumes no responsibility for the conversion of this standard to other formats or for incorrect results or damages resulting from its use.

CONTINUOUS CONCRETE OR STEEL BARRIER

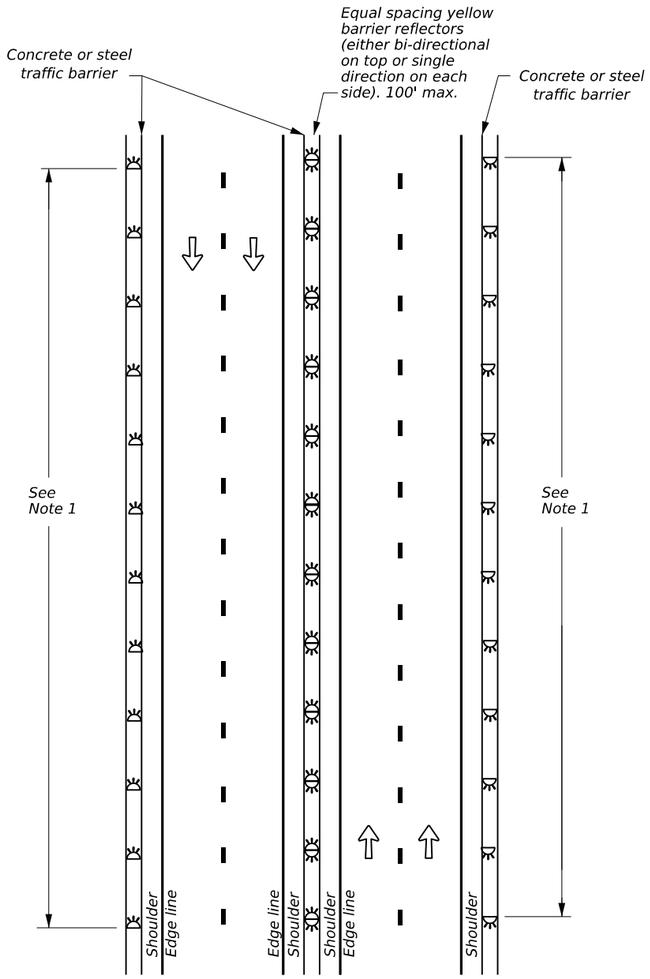

DETAIL 6a

MULTI-LANE UNDIVIDED, TWO-WAY ROADWAY WITH METAL BEAM GUARD FENCE (MBGF)

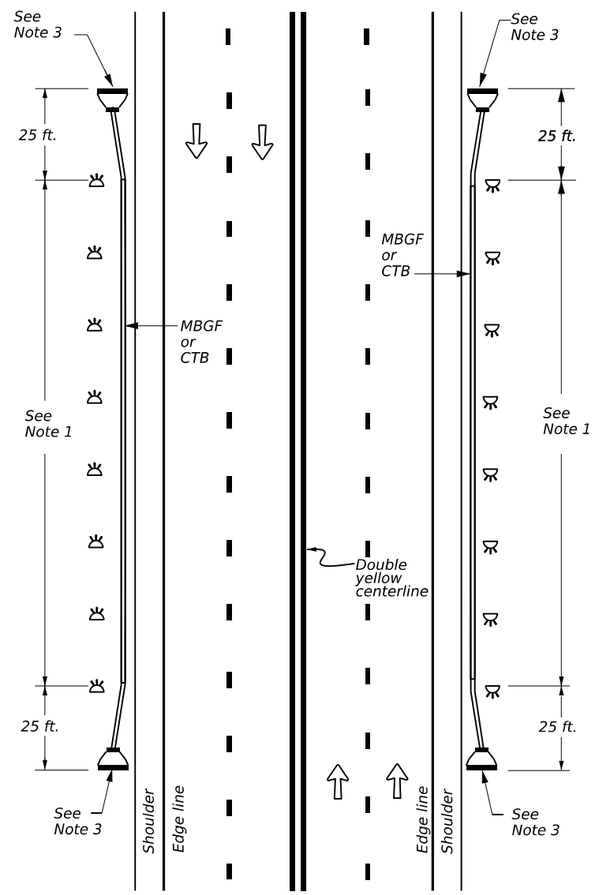

DETAIL 6b

DIVIDED ROADWAY WITH METAL BEAM GUARD FENCE (MBGF)

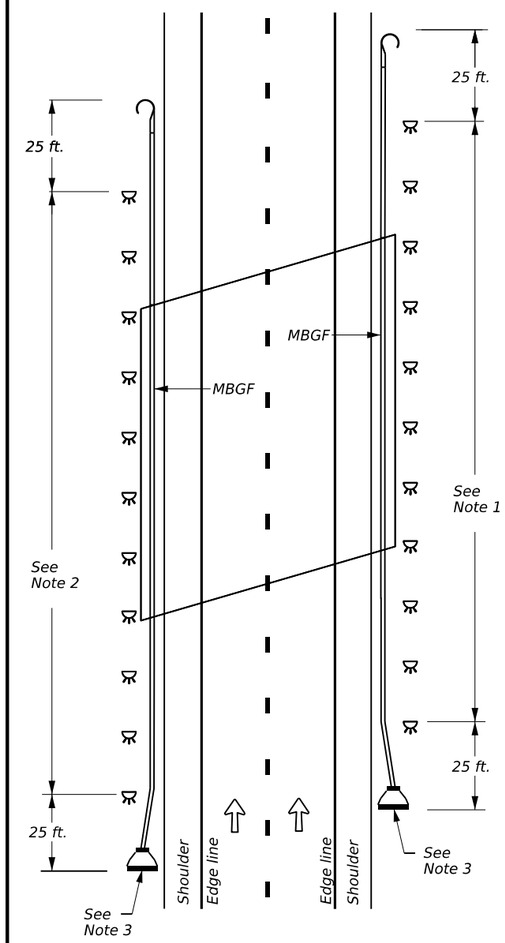

DETAIL 6c

EMERGENCY CROSSOVER WITH CABLE BARRIER

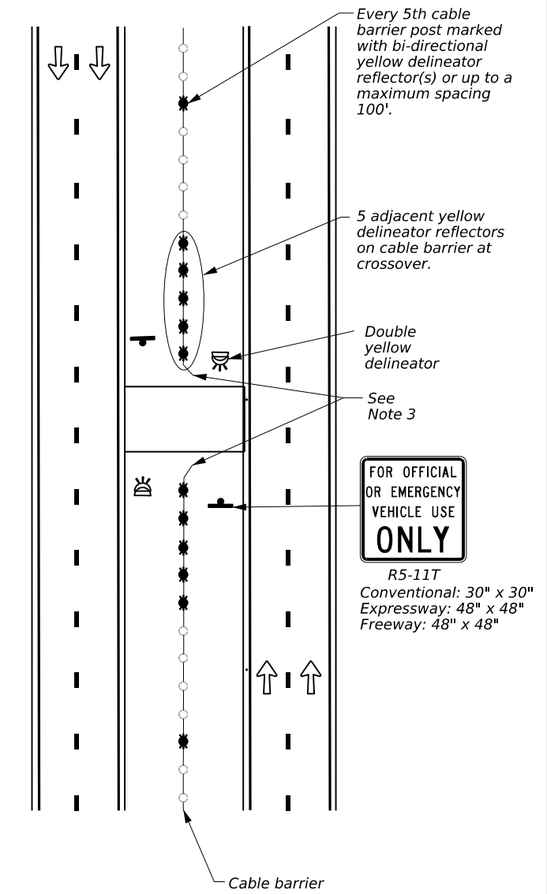

DETAIL 6d

NOTES

1. Equal spacing (100' max), but not less than three single directional white barrier reflectors or delineators. On Continuous Barrier, equal spacing (100' max.)
2. Equal spacing (100' max), but not less than three single directional yellow barrier reflectors or delineators.
3. Terminal ends require reflective sheeting provided by manufacturer per D&OM(VIA) or a Type 3 object marker (OM-3) in front of the terminal end.
4. Optional bi-directional delineators may be placed on divided roadways to indicate wrong way direction of travel. White or yellow reflector toward normal traffic and red reflector toward wrong way traffic.

GENERAL NOTE

Delineators (D) indicate roadway alignment. Object Markers (OM) identify obstructions. See D and OM definitions on D&OM(1) and D&OM(2), respectively.

LEGEND

- Traffic Flow
- Terminal End
- Downstream Anchor Terminal End
- Delineator
- Bidirectional Delineator
- Double Delineator

Texas Department of Transportation

Traffic Safety Division Standard

DELINEATOR & OBJECT MARKER PLACEMENT DETAILS

D & OM(6)-25

FILE: dom6-25.dgn	DN: TxDOT	CK: TxDOT	DW: TxDOT	CK: TxDOT
©TxDOT May 2025	CONT	SECT	JOB	HIGHWAY
REVISIONS	0231	03	156	IH-14
8-15 7-20 5-25	DIST		COUNTY	SHEET NO.
	WACO		BELL	134

20F

DATE: 7/11/2025 4:43:18 PM
FILE: c:\txdot\pw_online\txdot3\patrick.jalufka\d0807935\dom6-25.dgn

DISCLAIMER:
The use of this standard is governed by the "Texas Engineering Practice Act". No warranty of any kind is made by TxDOT for any purpose whatsoever. TxDOT assumes no responsibility for the conversion of this standard to other formats or for incorrect results or damages resulting from its use.

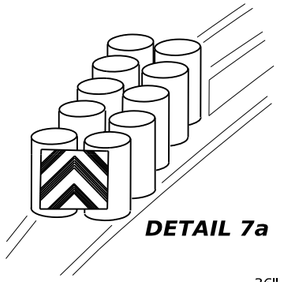

DETAIL 7a

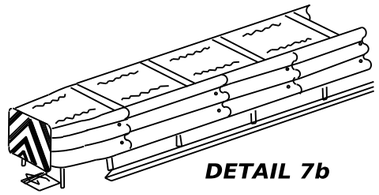

DETAIL 7b

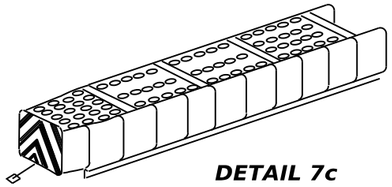

DETAIL 7c

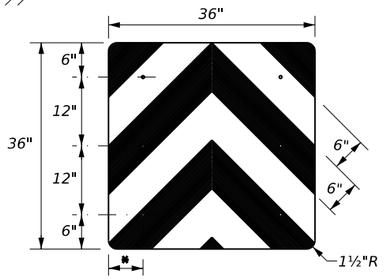

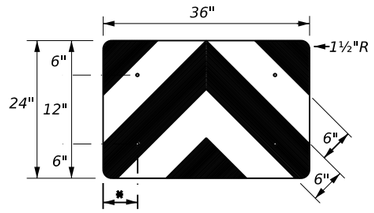

* Adjust to fit attenuator per manufacturer's recommendation, or as directed by the Engineer

TYPICAL ATTENUATOR INSTALLATION

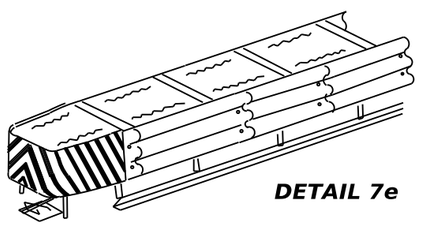

DETAIL 7e

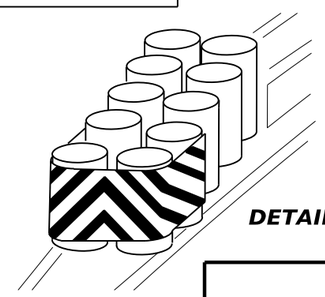

DETAIL 7f

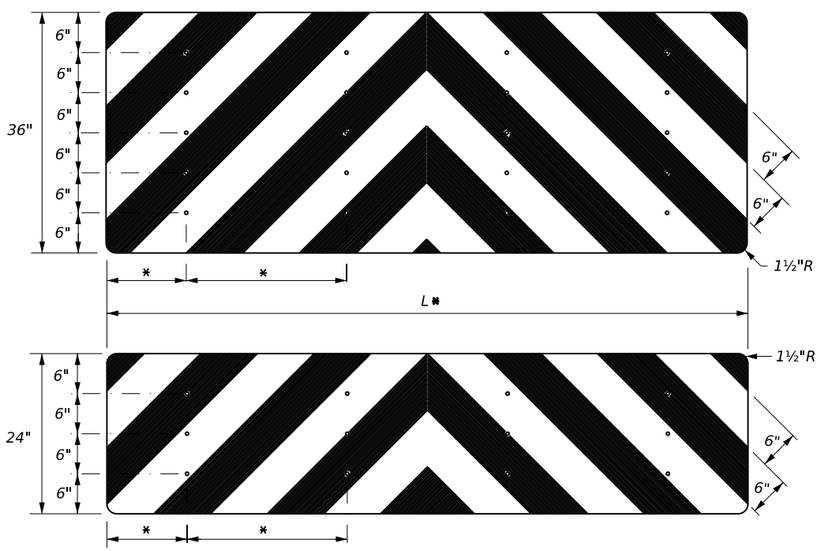

NOTES

*1. Spacing should be adjusted to attach through centerline of drum, per attenuator manufacturers recommendation, or as directed by the Engineer.

2. Mounting should be flush with top of attenuator. Minimum size 96" x 24".

TYPICAL APPLICATION OF OPTIONAL BACK PANEL

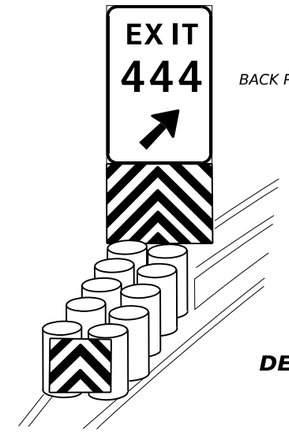

DETAIL 7d

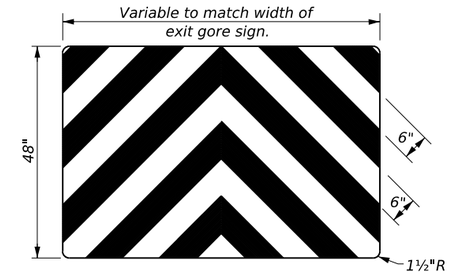

GUARDRAIL END TREATMENT

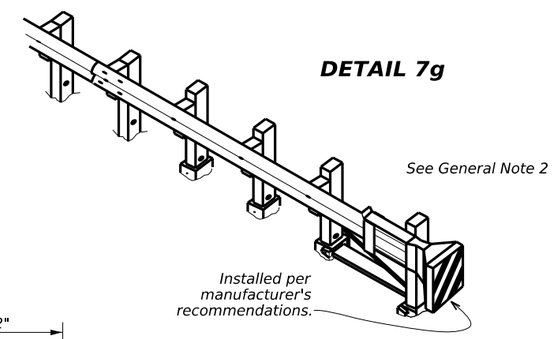

DETAIL 7g

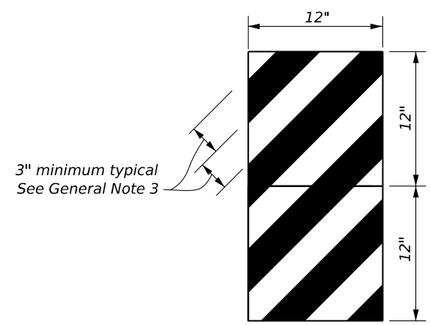

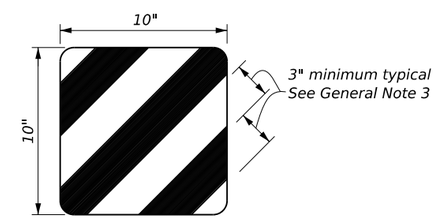

CABLE BARRIER END TREATMENT

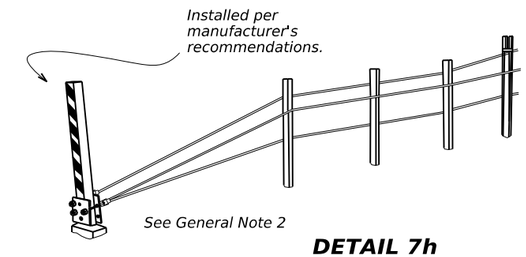

DETAIL 7h

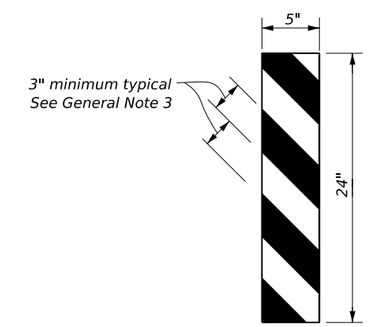

GENERAL NOTES

1. Markers [with the appearance of a Type 3 object marker (OM-3)] shall conform to the TMUTCD and meet the color and reflectivity requirement of the Departmental Material Specification (DMS-8300). Background shall be yellow reflective sheeting (Type B or C) and Chevron shall be black.

2. Markers may be fabricated from adhesive backed reflective sheeting applied directly to guardrail and cable barrier end treatments, or applied directly to an "end cap" as per the manufacturer's recommendation. Direct applied sheeting shall provide a smooth surface and have no wrinkles, air bubbles, cuts, or tears. A radius at the corners is not required for direct applied sheeting.

3. The combined width of alternating black and yellow stripes is typically 6". Marker size may be reduced to fit smaller devices. Markers smaller than 3ft² may have reduced width stripes of a minimum of 2¼" (combined 4½" width).

4. Pop rivets, screws, or nuts and bolts may be used to attach markers and reflectors. Holes, slots, or other openings may be cut or drilled through markers to allow cable or other attachments.

5. Marker or object marker placed on or at nose of attenuator is subsidiary to the attenuator.

6. See D & OM (1-4) for required barrier reflectors.

Texas Department of Transportation

Traffic Safety Division Standard

OBJECT MARKER FOR VEHICLE IMPACT ATTENUATORS

D & OM(VIA)-25

FILE: domvia-25.dgn	DN: TxDOT	CK: TxDOT	DW: TxDOT	CK: TxDOT
© TxDOT May 2025	CONT	SECT	JOB	HIGHWAY
REVISIONS	0231	03	156	IH-14
12-89 4-98 7-20 / 4-92 8-04 5-25 / 8-95 3-15	DIST	COUNTY		SHEET NO.
	WACO	BELL		135

20G

DATE: 7/11/2025 4:43:32 PM
FILE: c:\txdot\pw_online\txdot3\patrick.jalufka\d0807935\domvia-25.dgn

STORMWATER POLLUTION PRVENTION PLAN (SWP3):

This SWP3 has been developed in accordance with TxDOT policy for projects disturbing less than 1 acre of soil, and not part of a larger common plan of development.

For projects with less than one acre of soil disturbing activity and that have Environmental, Permits, Issues, and Commitments (EPICs) dependent on stormwater controls and water quality measures TxDOT will maintain a SWP3 with all pertinent records, correspondence, environmental documents, etc. at the project field office, Area Office, or electronically.

This SWP3 is consistent with requirements specified in applicable stormwater plans, and the project's environmental permits, issues, and commitments (EPICs).

1.0 SITE/PROJECT DESCRIPTION

1.1 PROJECT CONTROL SECTION JOB (CSJ):

0231-03-156

1.2 PROJECT LIMITS:

From: Jasper Drive

To: Rosewood Dr

1.3 PROJECT COORDINATES:

BEGIN: (Lat) 31.100646, (Long) -97.740397

END: (Lat) 31.075119, (Long) -97.685105

1.4 TOTAL PROJECT AREA (Acres): 185

1.5 TOTAL AREA TO BE DISTURBED (Acres): 0.45

1.6 NATURE OF CONSTRUCTION ACTIVITY:

HIGH MAST ILLUMINATION INSTALLATION

1.7 MAJOR SOIL TYPES:

Soil Type	Description
SaB	San Saba Clay
PrB	Purves Silty Clay
DeB	Denton Silty Clay

1.8 PROJECT SPECIFIC LOCATIONS (PSLs):

PSLs must be depicted on the Environmental Layout Sheets in Attachment 1.2 of this SWP3. PSLs may be identified during preconstruction meetings or during the construction process. Please choose from the options below:

☐ PSLs determined during preconstruction meeting
☐ PSLs determined during construction
☒ No PSLs planned for construction

Type	Sheet #s

All off-ROW PSLs required by the Contractor are the Contractor's responsibility. The Contractor shall secure all permits required by local, state, federal laws for off-ROW PSLs. The contractor shall provide diagrams, areas of disturbance, acreage, and BMPs for all off-ROW PSLs within one mile of the project.

1.9 CONSTRUCTION ACTIVITIES:

(Use the following list as a starting point when developing the Construction Activity Schedule and Ceasing Record in Attachment 2.3.)

☐ Mobilization
☐ Install sediment and erosion controls
☐ Blade existing topsoil into windrows, prep ROW, clear and grub
☐ Remove existing pavement
☐ Grading operations, excavation, and embankment
☐ Excavate and prepare subgrade for proposed pavement widening
☐ Remove existing culverts, safety end treatments (SETs)
☒ Remove existing metal beam guard fence (MBGF), bridge rail
☐ Install proposed pavement per plans
☐ Install culverts, culvert extensions, SETs
☒ Install mow strip, MBGF, bridge rail
☐ Place flex base
☐ Rework slopes, grade ditches
☐ Blade windrowed material back across slopes
☐ Revegetation of unpaved areas
☐ Achieve site stabilization and remove sediment and erosion control measures
☐ Other: _____
☐ Other: _____
☐ Other: _____

1.10 POTENTIAL POLLUTANTS AND SOURCES:

☒ Sediment laden stormwater from stormwater conveyance over disturbed area
☒ Fuels, oils, and lubricants from construction vehicles, equipment, and storage
☒ Solvents, paints, adhesives, etc. from various construction activities
☒ Transported soils from offsite vehicle tracking
☒ Construction debris and waste from various construction activities
☒ Contaminated water from excavation or dewatering pump-out water
☒ Sanitary waste from onsite restroom facilities
☒ Trash from various construction activities/receptacles
☒ Long-term stockpiles of material and waste
☒ Discharges from concrete washout activities, runoff from concrete cutting activities, and other concrete related activities
☐ Other: _____
☐ Other: _____
☐ Other: _____

1.11 RECEIVING WATERS:

Receiving waters must be depicted on the Environmental Layout Sheets in Attachment 1.2 of this SWP3. Include Segment # for receiving waters.

Tributaries	Classified Waterbody
South Nolan Creek	Brazos River (Segment 1218B)
Little Nolan Creek	Brazos River (Segment 1218C)
Trimmer Creek	Brazos River (Segment 1216A)

* Add (*) for impaired waterbodies with pollutant in ().

1.12 ROLES AND RESPONSIBILITIES: TxDOT

☒ Development of plans and specifications
☒ Perform SWP3 inspections
☒ Maintain SWP3 records and update to reflect daily operations
☐ Other: _____
☐ Other: _____

1.13 ROLES AND RESPONSIBILITIES: CONTRACTOR

☒ Day To Day Operational Control
☒ Maintain schedule of major construction activities
☒ Install, maintain and modify BMPs
☐ Other: _____
☐ Other: _____

STORMWATER POLLUTION PREVENTION PLAN (SWP3) (Less Than 1 Acre)

© 2023

July 2023 Sheet 1 of 2

Texas Department of Transportation

FED. RD. DIV. NO.	PROJECT NO.		SHEET NO.
			136
STATE	STATE DIST.	COUNTY	
TEXAS	WACO	BELL	
CONT.	SECT.	JOB	HIGHWAY NO.
0231	03	156	IH-14

STORMWATER POLLUTION PRVENTION PLAN (SWP3):

2.0 BEST MANAGEMENT PRACTICES (BMPs) AND CONTROLS, INSPECTION, AND MAINTENANCE

The Contractor shall be the responsible party for implementing the BMPs described herein and for complying with the SWP3 for control of erosion and sedimentation during day-to-day operations. The Contractor shall implement changes to this SWP3 approved by TxDOT within the times specified in this SWP3 or the CGP.

2.1 EROSION CONTROL AND SOIL STABILIZATION BMPs:

T / P

- ☐ X Protection of Existing Vegetation
- ☐ ☐ Vegetated Buffer Zones
- ☐ ☐ Soil Retention Blankets
- ☐ ☐ Geotextiles
- ☐ ☐ Mulching/ Hydromulching
- ☐ ☐ Soil Surface Treatments
- ☐ ☐ Temporary Seeding
- ☐ ☐ Permanent Planting, Sodding or Seeding
- ☐ ☐ Biodegradable Erosion Control Logs
- ☐ ☐ Rock Filter Dams/ Rock Check Dams
- ☐ ☐ Vertical Tracking
- ☐ ☐ Interceptor Swale
- ☐ ☐ Riprap
- ☐ ☐ Diversion Dike
- ☐ ☐ Temporary Pipe Slope Drain
- ☐ ☐ Embankment for Erosion Control
- ☐ ☐ Paved Flumes
- ☐ ☐ Other: _____
- ☐ ☐ Other: _____
- ☐ ☐ Other: _____
- ☐ ☐ Other: _____

2.2 SEDIMENT CONTROL BMPs:

T / P

- ☐ ☐ Biodegradable Erosion Control Logs
- ☐ ☐ Dewatering Controls
- ☐ ☐ Inlet Protection
- ☐ ☐ Rock Filter Dams/ Rock Check Dams
- ☐ ☐ Sandbag Berms
- X ☐ Sediment Control Fence
- ☐ ☐ Stabilized Construction Exit
- ☐ ☐ Floating Turbidity Barrier
- ☐ ☐ Vegetated Buffer Zones
- ☐ ☐ Vegetated Filter Strips
- ☐ ☐ Other: _____
- ☐ ☐ Other: _____
- ☐ ☐ Other: _____
- ☐ ☐ Other: _____

Refer to the Environmental Layout Sheets/ SWP3 Layout Sheets located in Attachment 1.2 of this SWP3

2.3 PERMANENT CONTROLS:

(Coordinate post-construction BMPs with appropriate TxDOT maintenance sections.)

BMPs To Be Left In Place Post Construction:

Type	Stationing	
	From	To

Refer to the Environmental Layout Sheets/ SWP3 Layout Sheets located in Attachment 1.2 of this SWP3

2.4 OFFSITE VEHICLE TRACKING CONTROLS:

- X Excess dirt/mud on road removed daily
- ☐ Haul roads dampened for dust control
- ☐ Loaded haul trucks to be covered with tarpaulin
- ☐ Stabilized construction exit
- ☐ Daily street sweeping
- ☐ Other: _____
- ☐ Other: _____
- ☐ Other: _____
- ☐ Other: _____

2.5 POLLUTION PREVENTION MEASURES:

- ☐ Chemical Management
- X Concrete and Materials Waste Management
- X Debris and Trash Management
- ☐ Dust Control
- X Sanitary Facilities
- ☐ Other: _____
- ☐ Other: _____
- ☐ Other: _____
- ☐ Other: _____

2.6 VEGETATED BUFFER ZONES:

Natural vegetated buffers shall be maintained as feasible to protect adjacent surface waters. If vegetated natural buffer zones are not feasible due to site geometry, the appropriate additional sediment control measures have been incorporated into this SWP3.

Type	Stationing	
	From	To

Refer to the Environmental Layout Sheets/ SWP3 Layout Sheets located in Attachment 1.2 of this SWP3

2.7 ALLOWABLE NON-STORMWATER DISCHARGES:

- X Fire hydrant flushings
- X Irrigation drainage
- X Pavement washwater (where spills or leaks have not occurred, and detergents are not used)
- X Potable water sources
- X Springs
- X Uncontaminated groundwater
- X Water used to wash vehicles or control dust
- X Other allowable non-stormwater discharges as allowed by TPDES GP TXR150000.

2.8 DEWATERING:

Dewatering discharges of accumulated stormwater, groundwater, and surface water including discharges from dewatering of trenches, excavations, foundations, vaults, and other points of accumulation are prohibited unless managed by appropriate controls to prevent and minimize the offsite discharge of sediment and other pollutants.

2.9 INSPECTIONS:

All disturbed areas and erosion and sediment control devices shall be inspected at least once every seven (7) days. Inspections shall be performed by TxDOT as indicated on the Field Inspection and Maintenance Report Form 2118 and retained in Attachment 2.3 of this SWP3 .

2.10 MAINTENANCE:

Control measures shall be properly installed according to specifications. If it is determined that a BMP or control measure is not operating effectively, maintenance must be accomplished as soon as possible and before the next anticipated rain event, but in no case later than 7 calendar days after being able to access the site. Maintenance shall be performed by the Contractor as indicated on the Field Inspection and Maintenance Report Form 2118 and retained in Attachment 2.3 of this SWP3.

STORMWATER POLLUTION PREVENTION PLAN (SWP3) (Less Than 1 Acre)

© 2023

July 2023 Sheet 2 of 2

Texas Department of Transportation

FED. RD. DIV. NO.	PROJECT NO.		SHEET NO.
			137
STATE	STATE DIST.	COUNTY	
TEXAS	WACO	BELL	
CONT.	SECT.	JOB	HIGHWAY NO.
0231	03	156	IH-14

DISCLAIMER:
The use of this standard is governed by the "Texas Engineering Practice Act". No warranty of any kind is made by TxDOT for any purpose whatsoever. TxDOT assumes no responsibility for the conversion of this standard to other formats or for incorrect results or damages resulting from its use.

I. STORMWATER POLLUTION PREVENTION-CLEAN WATER ACT SECTION 402

TPDES TXR 150000: Stormwater Discharge Permit or Construction General Permit required for projects with 1 or more acres disturbed soil. Projects with any disturbed soil must protect for erosion and sedimentation in accordance with Item 506.

List MS4 Operator(s) that may receive discharges from this project. They may need to be notified prior to construction activities.

1. City of Killeen MS4

2.

☒ No Action Required ☐ Required Action

Action No.

1. Prevent stormwater pollution by controlling erosion and sedimentation in accordance with TPDES Permit TXR 150000
2. Comply with the SW3P and revise when necessary to control pollution or required by the Engineer.
3. Post Construction Site Notice (CSN) with SW3P information on or near the site, accessible to the public and TCEQ, EPA or other inspectors.
4. Project will disturb more than 5 acres, submit NOI to TCEQ and the Engineer.

II. WORK IN OR NEAR STREAMS, WATERBODIES AND WETLANDS CLEAN WATER ACT SECTIONS 401 AND 404

USACE Permit required for filling, dredging, excavating or other work in any water bodies, rivers, creeks, streams, wetlands or wet areas.

The Contractor must adhere to all of the terms and conditions associated with the following permit(s):

☒ No Permit Required

☐ Nationwide Permit 14 - PCN not Required (less than 1/10th acre waters or wetlands affected)

☐ Nationwide Permit 14 - PCN Required (1/10 to <1/2 acre, 1/3 in tidal waters)

☐ Individual 404 Permit Required

☐ Other Nationwide Permit Required: NWP# _____

Required Actions: List waters of the US permit applies to, location in project and check Best Management Practices planned to control erosion, sedimentation and post-project TSS.

1.
2.
3.
4.
5.
6.
7.
8.

The elevation of the ordinary high water marks of any areas requiring work to be performed in the waters of the US requiring the use of a nationwide permit can be found on the Bridge Layouts.

Best Management Practices:

Erosion	Sedimentation	Post-Construction TSS
☐ Temporary Vegetation	☒ Silt Fence	☐ Vegetative Filter Strips
☐ Blankets/Matting	☒ Rock Berm	☐ Retention/Irrigation Systems
☐ Mulch	☐ Triangular Filter Dike	☐ Extended Detention Basin
☐ Sodding	☐ Sand Bag Berm	☐ Constructed Wetlands
☐ Interceptor Swale	☐ Straw Bale Dike	☐ Wet Basin
☐ Diversion Dike	☐ Brush Berms	☐ Erosion Control Compost
☐ Erosion Control Compost	☐ Erosion Control Compost	☐ Mulch Filter Berm and Socks
☐ Mulch Filter Berm and Socks	☐ Mulch Filter Berm and Socks	☐ Compost Filter Berm and Socks
☐ Compost Filter Berm and Socks	☐ Compost Filter Berm and Socks	☐ Vegetation Lined Ditches
	☐ Stone Outlet Sediment Traps	☐ Sand Filter Systems
	☐ Sediment Basins	☐ Grassy Swales

III. CULTURAL RESOURCES

Refer to TxDOT Standard Specifications in the event historical issues or archeological artifacts are found during construction. Upon discovery of archeological artifacts (bones, burnt rock, flint, pottery, etc.) cease work in the immediate area and contact the Engineer immediately.

☐ No Action Required ☒ Required Action

Action No.

1. SEE STATEMENT ABOVE

IV. VEGETATION RESOURCES

Preserve native vegetation to the extent practical.
Contractor must adhere to Construction Specification Requirements Specs 162, 164, 192, 193, 506, 730, 751, 752 in order to comply with requirements for invasive species, beneficial landscaping, and tree/brush removal commitments.

☐ No Action Required ☒ Required Action

Action No.

1. SEE STATEMENT ABOVE

V. FEDERAL LISTED, PROPOSED THREATENED, ENDANGERED SPECIES, CRITICAL HABITAT, STATE LISTED SPECIES, CANDIDATE SPECIES AND MIGRATORY BIRDS.

☐ No Action Required ☒ Required Action

Action No.

1. Comply with Migratory Bird Treaty Act (MBTA)

2. SEE STATEMENT BELOW

If any of the listed species are observed, cease work in the immediate area, do not disturb species or habitat and contact the Engineer immediately. The work may not remove active nests from bridges and other structures during nesting season of the birds associated with the nests. If caves or sinkholes are discovered, cease work in the immediate area, and contact the Engineer immediately.

LIST OF ABBREVIATIONS

BMP:	Best Management Practice	SPCC:	Spill Prevention Control and Countermeasure
CGP:	Construction General Permit	SW3P:	Storm Water Pollution Prevention Plan
DSHS:	Texas Department of State Health Services	PCN:	Pre-Construction Notification
FHWA:	Federal Highway Administration	PSL:	Project Specific Location
MOA:	Memorandum of Agreement	TCEQ:	Texas Commission on Environmental Quality
MOU:	Memorandum of Understanding	TPDES:	Texas Pollutant Discharge Elimination System
MS4:	Municipal Separate Stormwater Sewer System	TPWD:	Texas Parks and Wildlife Department
MBTA:	Migratory Bird Treaty Act	TxDOT:	Texas Department of Transportation
NOT:	Notice of Termination	T&E:	Threatened and Endangered Species
NWP:	Nationwide Permit	USACE:	U.S. Army Corps of Engineers
NOI:	Notice of Intent	USFWS:	U.S. Fish and Wildlife Service

VI. HAZARDOUS MATERIALS OR CONTAMINATION ISSUES

General (applies to all projects):

Comply with the Hazard Communication Act (the Act) for personnel who will be working with hazardous materials by conducting safety meetings prior to beginning construction and making workers aware of potential hazards in the workplace. Ensure that all workers are provided with personal protective equipment appropriate for any hazardous materials used.

Obtain and keep on-site Material Safety Data Sheets (MSDS) for all hazardous products used on the project, which may include, but are not limited to the following categories: Paints, acids, solvents, asphalt products, chemical additives, fuels and concrete curing compounds or additives. Provide protected storage, off bare ground and covered, for products which may be hazardous. Maintain product labelling as required by the Act.

Maintain an adequate supply of on-site spill response materials, as indicated in the MSDS. In the event of a spill, take actions to mitigate the spill as indicated in the MSDS, in accordance with safe work practices, and contact the District Spill Coordinator immediately. The Contractor shall be responsible for the proper containment and cleanup of all product spills.

Contact the Engineer if any of the following are detected:

* Dead or distressed vegetation (not identified as normal)
* Trash piles, drums, canister, barrels, etc.
* Undesirable smells or odors
* Evidence of leaching or seepage of substances

Does the project involve any bridge class structure rehabilitation or replacements (bridge class structures not including box culverts)?

☐ Yes ☒ No

Are the results of the asbestos inspection positive (is asbestos present)?

☐ Yes ☒ No

If "Yes", then TxDOT must retain a DSHS licensed asbestos consultant to assist with the notification, develop abatement/mitigation procedures, and perform management activities as necessary. The notification form to DSHS must be postmarked at least 15 working days prior to scheduled demolition.

If "No", then TxDOT is still required to notify DSHS 15 working days prior to any scheduled demolition.

In either case, the Contractor is responsible for providing the date(s) for abatement activities and/or demolition with careful coordination between the Engineer and asbestos consultant in order to minimize construction delays and subsequent claims.

Any other evidence indicating possible hazardous materials or contamination discovered on site. Hazardous Materials or Contamination Issues Specific to this Project:

☒ No Action Required ☐ Required Action

Action No.

1.

VII. OTHER ENVIRONMENTAL ISSUES

(includes regional issues such as Edwards Aquifer District, etc.)

☒ No Action Required ☐ Required Action

Action No.

1.

2.

3.

Texas Department of Transportation — Design Division Standard

ENVIRONMENTAL PERMITS, ISSUES AND COMMITMENTS

EPIC

FILE: epic.dgn	DN: TxDOT	CK: RG	DW: VP	CK: AR
© TxDOT: February 2015	CONT	SECT	JOB	HIGHWAY
REVISIONS 12-12-2011 (DS) 05-07-14 ADDED NOTE SECTION IV. 01-23-2015 SECTION I (CHANGED ITEM 1122 TO ITEM 506, ADDED GRASSY SWALES.	0231	03	155	IH 14
	DIST	COUNTY		SHEET NO.
	WACO	BELL		138

DATE:
FILE:

BEST MANAGEMENT PRACTICE (BMP) GENERAL NOTES

1. Prior to TxDOT allowing the Contractor to start construction, the Contractor will provide the required storm water and 404 permit documentation and support activities, including but not limited to the following:

   - Provide a list of all chemicals, construction and waste products that will be generated, stored or brought upon TxDOT ROW. The list includes expected construction debris, sanitary wastes, construction chemicals and petroleum products used or generated by the Contractor and sub-contractors. Along with the list, the Contractor will supply a spill prevention plan and clean up procedures that will include each of these chemical products or generated waste.

   - Provide in the construction schedule the necessary line items that will comply with the schedule and planning requirements of the storm water permit.

   - Post the TxDOT storm water permit and any Contractor permits, per permit requirements.

   - Provide copies of storm water permits for Contractor PSL(s). As new PSL(s) may be obtained for the project, provide copies of new or amended permits to TxDOT. The Contractor will not disturb soil without the proper permits.

   - Provide scale drawings of off ROW PSL's within one mile of the project, for field offices, borrow sources, plant sites or other uses.

   - Provide permit information on any Contractor batch plants or concrete crushing plants to be located at a Contractor PSL(s) within one mile of the project limits or boundaries. Copies of the air and water permits are to be provided to TxDOT before materials will be used on the project. No asphalt or concrete batch plants or concrete crushing plants will be located on TxDOT ROW.

   - Provide a letter indicating a Contractor Responsible Person for environmental compliance (CRP) for the project, and maintain a CRP throughout the project duration.

   - Provide all environmental documentation including certification of compliance and EMS training documents/certificates prior to starting work. The Contractor is to provide daily BMP inspection reports that document all field BMPs needing repair or replacement. The Contractor is to clearly document specific BMPs needing repair and location each work day. The Contractor is encouraged to be proactive in fixing BMPs without TxDOT direction.

   - Provide documentation required for Waters of the US, Note #3 and submittals for Item 496 bridge removal. Bridge removal methods submitted will follow all Waters of the US note requirements. The Contractor is not to start construction within the Ordinary High Water Marks of any stream until receiving approval for stream channel construction methods from TxDOT.

   - Provide a written procedure for managing all chemicals and construction items placed in vertical containment structures. Also, provide methods to be used for the treatment, disposal, collection or release of storm water.

   - Provide an estimated date by letter, for the submittal of marked up bridge drawings, indicating cut locations for any structural steel requiring cutting or torching of steel, coated with lead containing paints.

2. Place and maintain trash cans and portable sanitary facilities at locations where there is active construction. Worker generated trash and construction debris will be kept from being transported by storm water and will be collected daily from the ground and routinely hauled from the work area.

3. Contractor will provide TxDOT copies of all correspondence with MS4s, TCEQ, EPA, DSHS and Corps of Engineers regarding activities on this project.

4. Contractor to conduct storm water inspections and develop SWPPP documents to support Contractor permits obtained for the project including PSL(s).

5. Contractor will maintain written documentation of locations of all portable sanitary facilities. The Contractor is required to document the location and disposition of all spills and cleanups from portable sanitary facilities.

6. Contractor will not store chemicals on TxDOT ROW, unless chemicals are stored following all environmental and safety regulations. Fuels for construction equipment will not be stored on TxDOT ROW.

7. The Contractor will store fuels and bulk chemicals on Contractor PSL(s) using a secondary containment method, such as double lined tanks and/or free standing containment reservoirs made of plastic or steel designed to hold bulk chemicals or drums.

8. The Contractor will not remove sediment controls without the prior approval of TxDOT, except for a sediment control that may back up water and cause safety or traffic problems.

SCALE = NTS SHEET 1 OF 10

Texas Department of Transportation
Waco District Standard

TYPICAL APPLICATIONS FOR BEST MANAGEMENT PRACTICES

TA-BMP

FILE: BMPLAYOUTS.dgn	DN:	CK:	DW:	CK:	
© TxDOT 2009	CONT	SECT	JOB	HIGHWAY	
REVISIONS	0231	03	156	IH-14	
DEC 2013 FEB 2015	DIST		COUNTY		SHEET NO.
	WACO		BELL		139

BEST MANAGEMENT PRACTICE (BMP) GENERAL NOTES

9. Any sediment controls removed by the Contractor must be re-installed before the next rainfall event or by the end of day, as approved in advance.

10. Vegetative buffer strips may be used in place of temporary sediment controls such as silt fences and rock filter dams. The amount of disturbed soil area will be limited to 1/3 of an acre or less for a minimum of 50 feet of grassed ditch and 2/3 of an acre of disturbed soil for a minimum of 100 feet of grassed ditch.

11. Construction equipment found to be leaking oil, fuel or coolant will be immediately stopped, the leaking fluid collected and the equipment fixed. Equipment continuing to leak will be removed from the project at no cost to TxDOT. Leaking fluids from equipment will be collected and removed from the project or PSL.

12. Earth berms or mounds typically used to stockpile topsoil and used in place of boundary silt fence will be seeded upon being constructed. Long term use of earth berms or mounds will not be continued without establishing grass on the control.

13. The Contractor will inform TxDOT of new areas where soil will be disturbed to facilitate planning for new sediment controls. Areas of vegetated soil will not be disturbed by the Contractor, unless adequate sediment controls can be installed before the next rainfall event. The Contractor will assist TxDOT in keeping an accurate set of working SWPPP drawings that show the locations of all temporary sediment and erosion controls.

14. The Contractor will maintain an adequate amount of temporary sediment controls on hand at the field office or project staging area for critical SWPPP maintenance, including silt fence (minimum of 200 feet) and rock / fabric for rock filter dams (minimum for 100 feet of Type III dams).

    The requirement for BMP rock quantities on hand is waived for small projects for on and off system bridge installations. The Contractor having a BMP Subcontractor does not eliminate the requirement for the Contractor to have the required silt fence and rock on hand, typically stored at the Contractor PSL.

15. Failure of a sub-contractor to complete storm water work on time will require the Contractor to start storm water sediment control work immediately and complete the work with high priority, or be subject to stop work on the entire project.

16. Earth materials on roads as a result of soil tracking will not be allowed to be transported off ROW in storm water. Soil or rock material found on roadways deposited from Contractor equipment will be removed daily.

17. Unless approved, completed concrete curb inlets will not be blocked by sediment controls. The contractor will frequently sweep the completed or partially completed roadway to keep sediment out of drainage pipes.

18. The Contractor will be responsible for proper dust control and will route construction traffic in a manner that minimizes dust generation.

19. Water for dust control will contain no pollutants, but may be non-potable from upland stock ponds. No quantity of water to be used for construction purposes may be taken from a 404 stream, prior to the proper authorizations or permits being obtained by the Contractor.

20. Contractor is to direct workers and sub-contractors to use portable sanitary facilities provided by the Contractor and not to trespass off ROW.

21. Contractor will provide written verification to TxDOT that earth borrow pits and disposal sources meet environmental and regulatory requirements, prior to use. Excavations will meet all OSHA requirements and the current safety guidelines established for TxDOT Quarries and Pits.

22. Boundary silt fences that are terminated down slope, with one end being at the lowest elevation, will be installed with an L - hook to contain sediment. Boundary silt fences that are installed on flat ground will have L-hooks on both ends.

23. Rock filter dams across ditches will be constructed where the rock filter dam ends are embedded within the ditch side slopes and ditch bottom. The top center elevation of the rock filter dam will be at least 6 inches lower than the elevations on the rock filter dam ends.

24. Silt fence will be constructed in a U or V pattern across ditch lines and up the ditch side slope to keep storm water from flowing around the ends of the silt fence. Small silt fences that do not adequately span the ditch and allows storm water around the end(s) will not be used. Where there is adequate space, large U pattern silt fences are preferred to facilitate sediment collection and sediment removal with equipment.

25. Sediment controls (RFDs or silt fences) will be located along road ditches as marked on the SWPPP drawings. Modifications to the sediment control spacing will be adjusted during the project based on sediment control effectiveness. The installation and maintenance of sediment controls at or near outfalls, where storm water leaves TxDOT ROW, takes persistent over ditch line sediment controls.

SCALE = NTS SHEET 2 OF 10

Texas Department of Transportation
Waco District Standard

TYPICAL APPLICATIONS FOR BEST MANAGEMENT PRACTICES

TA-BMP

FILE: BMPLAYOUTS.dgn	DN:		CK:	DW:	CK:
© TxDOT 2009	CONT	SECT	JOB	HIGHWAY	
REVISIONS DEC 2013 FEB 2015	0231	03	156	IH-14	
	DIST		COUNTY		SHEET NO.
	WACO		BELL		140

BEST MANAGEMENT PRACTICE (BMP) GENERAL NOTES

26. Storm water draining sheet flow over disturbed soil sloped towards the ROW property line, will be intercepted by a boundary silt fence typically installed with L-shaped ends.

27. For ditch grading and shoulder up work, the Contractor is limited during good weather to remove up to one mile (limited to five acres of disturbed soil) of ditch line sediment controls; on one side of the roadway. Outfall controls cannot be removed during this activity. Ditch line controls must be replaced upon completion of work and before the next rain event.

28. Sediment controls damaged by the Contractor, as defined by permit, must be fixed or replaced immediately upon discovery.

29. Notches in silt fences are not typically allowed. Specific silt fences that back up water onto lanes of traffic may be notched if approved.

30. For silt fence maintenance, the Contractor will leave approximately 4 inches of deposited sediment up stream of silt fences and not over excavate around silt fences or rock filter dams.

31. The Contractor will inform TxDOT of new construction areas and where soil is planned to be disturbed. Sediment controls will be installed at outfalls prior to the Contractor beginning soil disturbing activities up slope from the outfall.

32. Water from concrete saw cutting, concrete grinding and concrete coring activities; or fine materials from concrete chipping and salvage will not be allowed to enter storm drains or enter streams.

33. Storm water containing suspended sediment and turbidity needing to be removed from excavations or low areas will be pumped or gravity drained through vegetated buffer strips (50 foot minimum) or placed in ditches with temporary sediment controls, prior to the water being discharged into a stream.

34. Uncontaminated water from natural groundwater seepage, springs, foundations and drains that does not contain suspended sediment or any pollutants may be discharged without storm water controls.

35. Lime or cement if spilled in ditches or outside the defined limits of application is considered a pollutant and will be excavated and removed the same day, to avoid contaminating streams.

36. If located along the project ROW, RAP stockpiles will be located where there is a minimum 100 feet of vegetative buffer strip before storm water will reach a stream. RAP will not be used as a construction material within the Ordinary High Water Marks of a stream channel of a 404 designated stream.

37. If allowed on the project, concrete truck wash out areas will have adequate volume to allow 12 inch freeboard for rain and will be lined with 6 mils of plastic. No concrete will be stored higher than the 12 inch freeboard. Cleaning of truck chutes and equipment does not constitute concrete truck wash out and this activity may be completed at the concrete placement location. Wash out areas will not be located closer than 50 ft from down slope inlets or stream channels.

38. For outfalls near stock ponds closer than 50 foot from disturbed soil at the ROW line, redundant sediment controls will be provided, typically a combination of rock filter dam and a silt fence constructed in line of the flow.

39. Earth stockpiles will utilize silt fence sediment controls, positioned on the low end of the stockpile drainage area with L-hooks or silt fence installed around the entire stockpile.

40. Sediment controls including rock filter dams and silt fences will not be installed across any 404 streams. Sediment controls at 404 streams will be positioned to limit sediment entering the stream from the banks and around structures/culverts, and will allow free flow of storm water to pass through the ROW without being dammed by any sediment controls. Remove loose materials from stream channels prior to each rain event.

41. Sediment controls for non-404 streams may be constructed across the drainage channel in unlimited locations. It is appropriate to use sediment control details typically used for 404 streams for non-404 streams when flow velocities are high. Remove loose material from stream channels prior to each rain event.

42. Incomplete drainage pipe installation across the roadway does not remove the requirement for having sediment controls around the ends of the pipe. To stay within permit requirements, sediment controls should be installed over and around the terminated end and along each side of the banks as soon as construction on the pipe has been completed. Remove loose material from stream channels prior to each rain event.

43. Safety end / headwall construction temporarily will require the removal of part of the sediment control placed over and around the pipe end. Retain in place as much functioning sediment control as possible. Replace the silt fence over and around the top of the pipe, immediately upon concrete placement and form removal. Do not remove culvert sediment controls that cannot be replaced before the next rain event. Sediment control at the ends of culverts must be in place and available for any rain event until the disturbed soil areas are re-vegetated.

Texas Department of Transportation
Waco District Standard

TYPICAL APPLICATIONS FOR BEST MANAGEMENT PRACTICES

TA-BMP

FILE: BMPLAYOUTS.dgn	DN:		CK:	DW:		CK:
©TxDOT 2009	CONT	SECT	JOB		HIGHWAY	
REVISIONS DEC 2013 FEB 2015	0231	03	156		IH-14	
	DIST		COUNTY			SHEET NO.
	WACO		BELL			141

BEST MANAGEMENT PRACTICE (BMP) GENERAL NOTES

44. Between the Ordinary High Water Marks of a 404 stream channel, the Contractor will disturb only the minimum amount of stream channel that is necessary to complete the work.

45. Rock riprap for erosion control does not replace the requirements to maintain sediment control until vegetation is re-established. Replace sediment controls immediately after installing erosion rock.

46. At the direction of TxDOT, sediment deposited into existing and new culverts will be removed subsidiary to Item 506. Sediment to be removed is either pre-existing material before construction starts or sediment generated as a part of this project.

47. Provide treated 2X4 cross bracing for rectangular inlet silt fence, subsidiary to Item 506.

48. Loose or granular earth materials will not be used to repair silt fence undercuts. Silt fence undercut repairs will be conducted with well compacted soils or the silt fence will be reset in a nearby location.

49. Silt fence steel T posts of approximately 1.25 pounds per foot are allowed at a spacing of 8 feet or less. Silt fence steel T posts between approximately 1.25 pounds per foot and 0.85 pounds per foot are allowed for T post spacing of 5 feet or less.

50. Silt fence to be used to slow the flow of storm water down slopes will be positioned approximately horizontal (on the contour) with L hooks on the ends and limited to approximately 200 feet in length. Multiple sections and levels of silt fence may be required in addition to temporary / permanent erosion control flumes.

51. Soil retention blankets will be installed rolled down the slope with the small dimension side embedded at the top of slope, unless recommended otherwise by the manufacturer. Excess grass, rocks, trash, debris or clods will be removed before seeding and installing soil retention blankets. All installations will be by the manufacturer recommendations. Contractor equipment, including tractor mowers will be kept off areas with soil retention blankets until the grass is established.

SCALE = NTS SHEET 4 OF 10

Texas Department of Transportation
Waco District Standard

TYPICAL APPLICATIONS FOR BEST MANAGEMENT PRACTICES

TA-BMP

FILE: BMPLAYOUTS.dgn	DN:		CK:	DW:		CK:
© TxDOT 2009	CONT	SECT	JOB		HIGHWAY	
REVISIONS DEC 2013 FEB 2015	0231	03	156		IH-14	
	DIST		COUNTY			SHEET NO.
	WACO		BELL			142

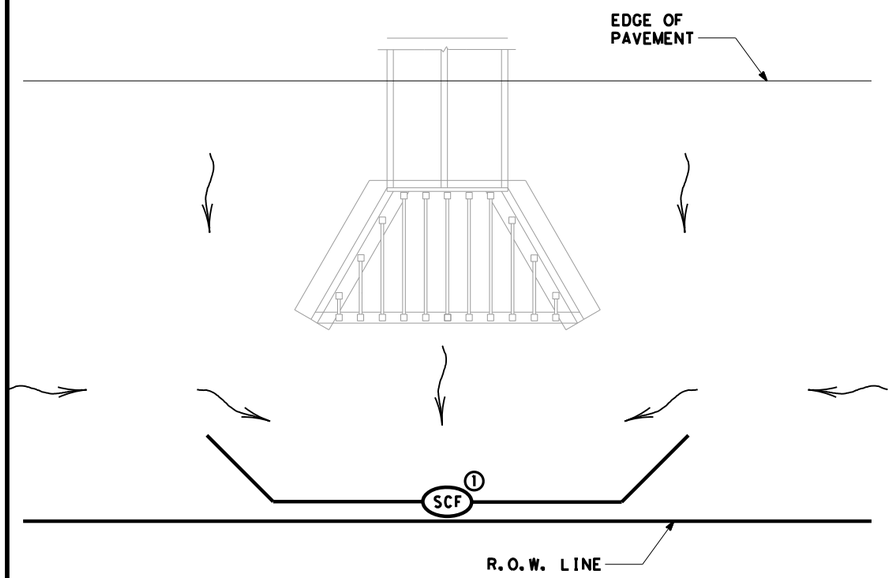

BEST MANAGEMENT PRACTICE (BMP) #1

FOR NON-404 STREAMS ONLY ~ SEDIMENT CONTROL AT EXIT OF CULVERT

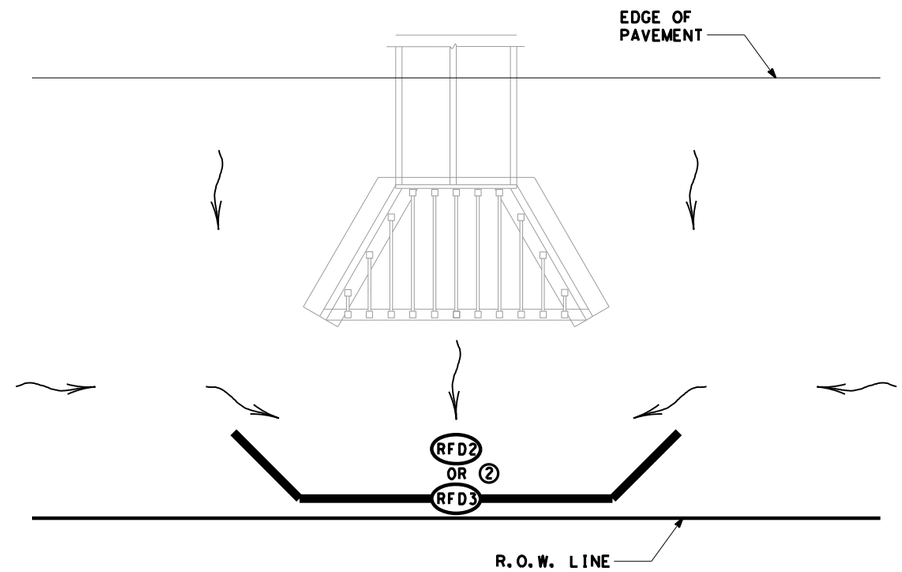

BEST MANAGEMENT PRACTICE (BMP) #2

FOR NON-404 STREAMS ONLY ~ SEDIMENT CONTROL AT EXIT OF CULVERT

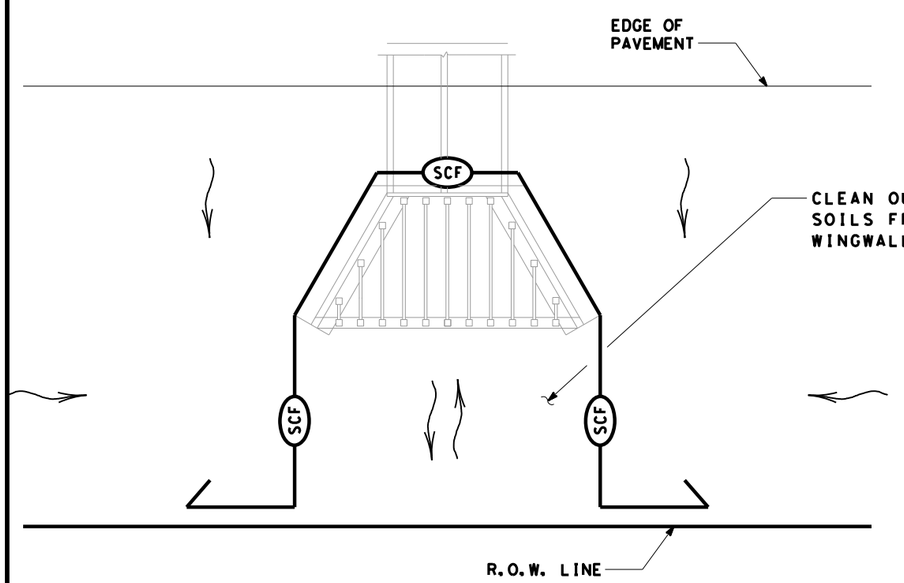

BEST MANAGEMENT PRACTICE (BMP) #3

FOR 404 OR NON-404 STREAMS ~ SEDIMENT CONTROL AT EXIT OR ENTRANCE OF CULVERT

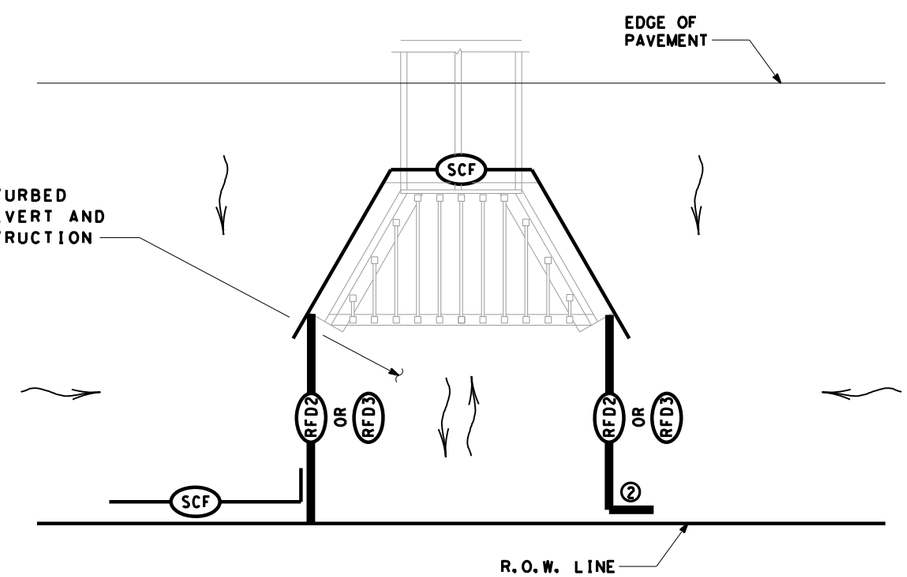

BEST MANAGEMENT PRACTICE (BMP) #4

FOR 404 OR NON-404 STREAMS ~ SEDIMENT CONTROL AT EXIT OR ENTRANCE OF CULVERT

SCF	SEDIMENT CONTROL FENCE
RFD2	ROCK FILTER DAM (TY 2)
RFD3	ROCK FILTER DAM (TY 3)
	DIRECTION OF FLOW

NOTES:

1. EXTEND SILT FENCE SO STORM WATER DOES NOT GO AROUND THE ENDS. USE L-HOOKS ON ENDS AS REQUIRED.
2. EXTEND ROCK FILTER DAM SO STORM WATER DOES NOT GO AROUND THE ENDS.

SCALE = NTS SHEET 5 OF 10

Texas Department of Transportation
Waco District Standard

TYPICAL APPLICATIONS FOR BEST MANAGEMENT PRACTICES

TA-BMP

FILE: BMPLAYOUTS.dgn	DN: TXDOT		CK: TXDOT	DW: TXDOT	CK: TXDOT
© TxDOT 2009	CONT	SECT	JOB	HIGHWAY	
REVISIONS DEC 2013 FEB 2015	0231	03	156	IH-14	
	DIST		COUNTY		SHEET NO.
	WACO		BELL		143

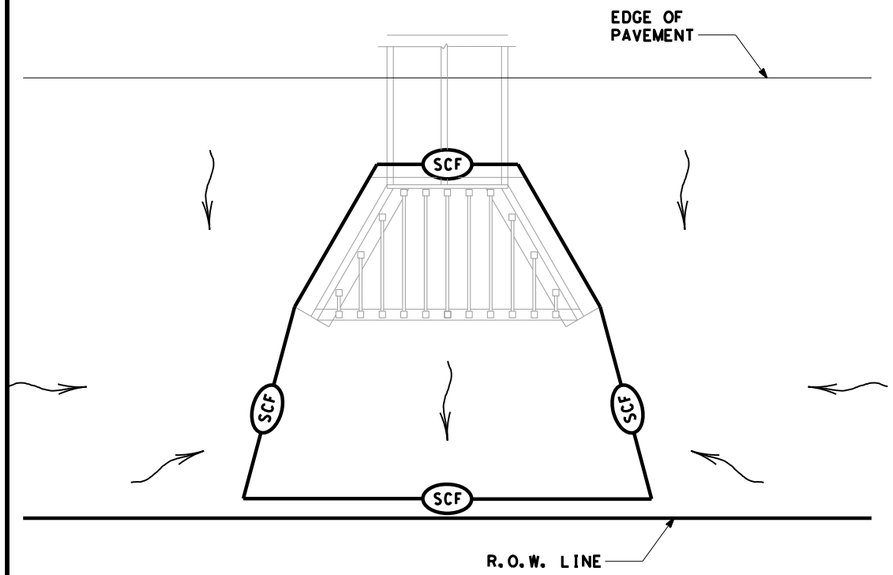

BEST MANAGEMENT PRACTICE (BMP) #5

FOR NON-404 STREAMS ONLY ~ SEDIMENT CONTROL AT EXIT OF CULVERT

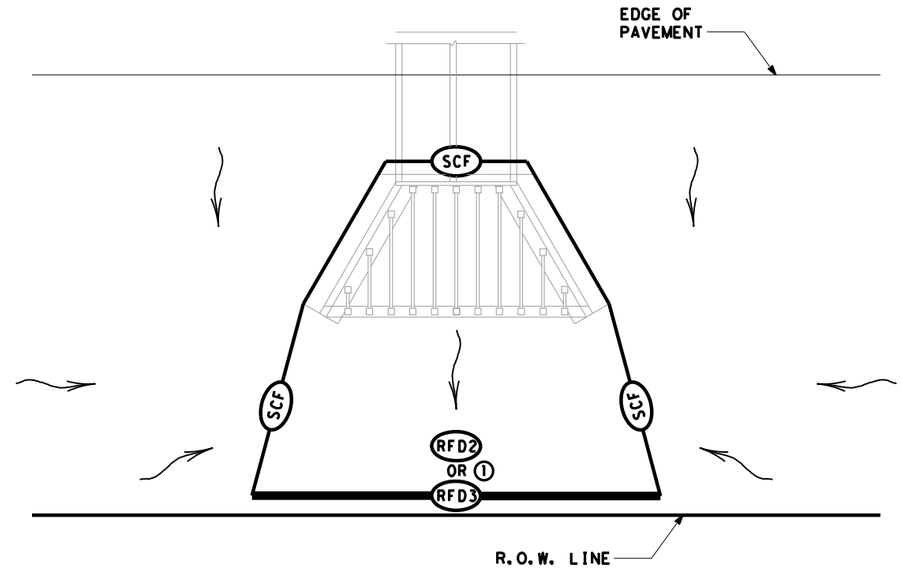

BEST MANAGEMENT PRACTICE (BMP) #6

FOR NON-404 STREAMS ONLY ~ SEDIMENT CONTROL AT EXIT OF CULVERT

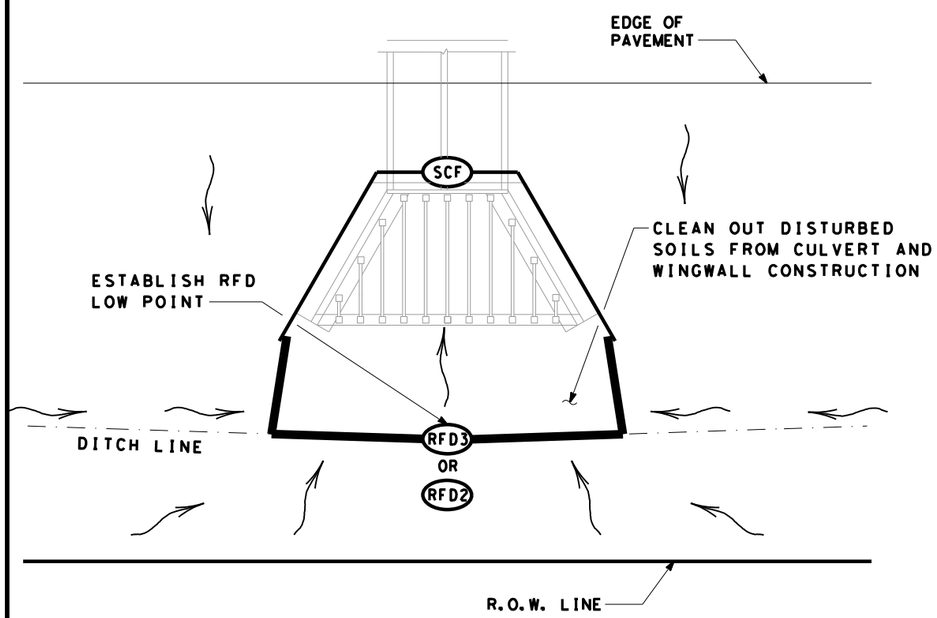

BEST MANAGEMENT PRACTICE (BMP) #7

FOR NON-404 STREAMS ONLY ~ SEDIMENT CONTROL AT ENTRANCE OF CULVERT

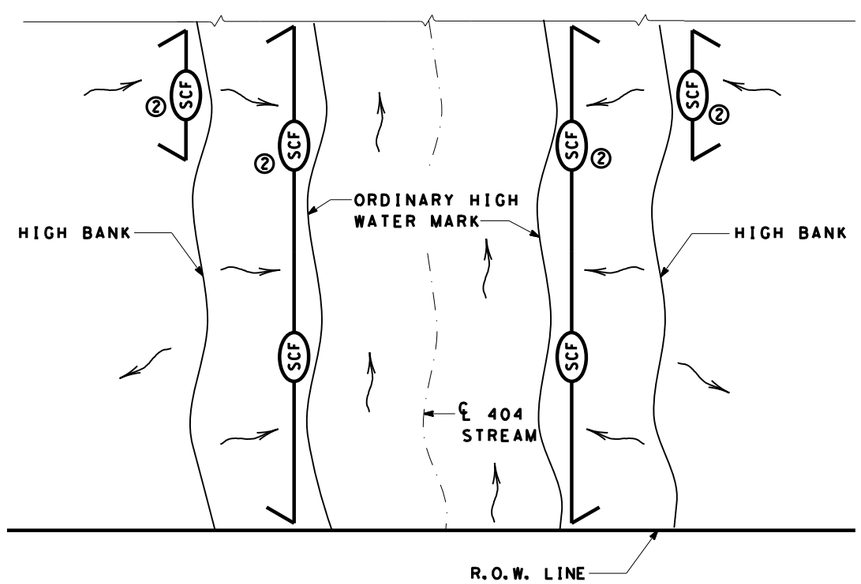

BEST MANAGEMENT PRACTICE (BMP) #8

FOR 404 STREAMS ~ SEDIMENT CONTROL DURING PROJECT CLEARING AND GRUBBING

SCF	SEDIMENT CONTROL FENCE
RFD2	ROCK FILTER DAM (TY 2)
RFD3	ROCK FILTER DAM (TY 3)
	DIRECTION OF FLOW

NOTES:

1. PROVIDE OVERLAP OF SILT FENCE WITH ROCK FILTER DAM.
2. USE SILT FENCE L-HOOKS ON ENDS TO BLOCK STORM WATER SEDIMENT

SCALE = NTS SHEET 6 OF 10

Texas Department of Transportation
Waco District Standard

TYPICAL APPLICATIONS FOR BEST MANAGEMENT PRACTICES

TA-BMP

FILE: BMPLAYOUTS.dgn	DN: TXDOT		CK: TXDOT	DW: TXDOT	CK: TXDOT
© TxDOT 2009	CONT	SECT	JOB	HIGHWAY	
REVISIONS DEC 2013 FEB 2015	0231	03	156	IH-14	
	DIST		COUNTY		SHEET NO.
	WACO		BELL		144

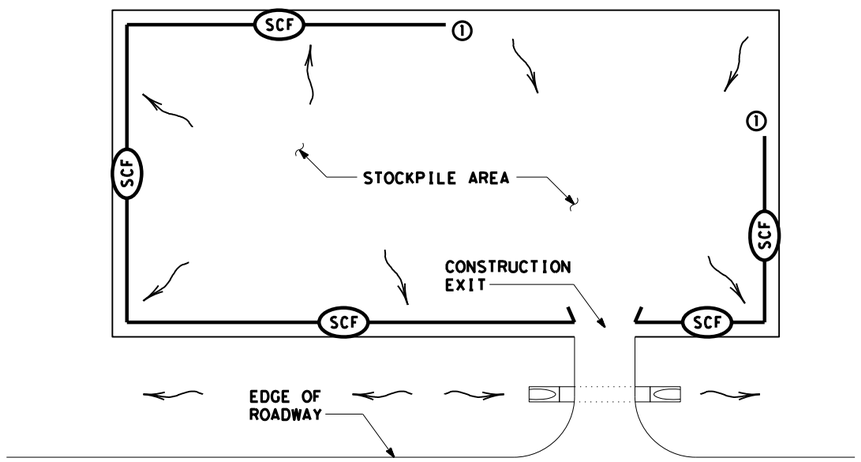

BEST MANAGEMENT PRACTICE (BMP) #9

STOCKPILE SEDIMENT CONTROL

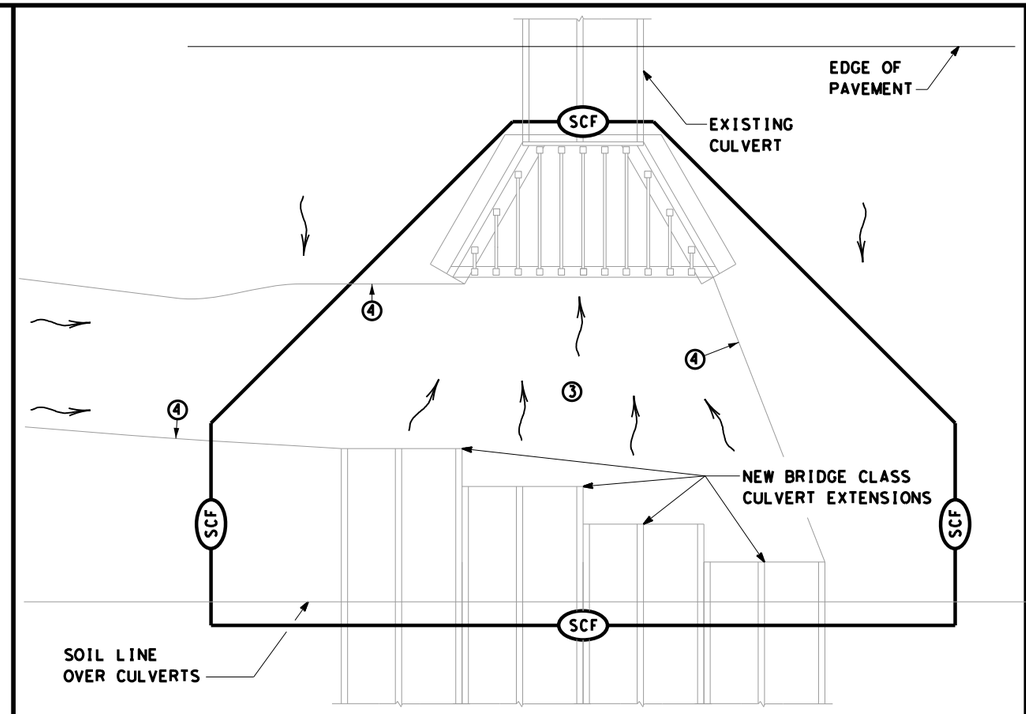

BEST MANAGEMENT PRACTICE (BMP) #10

FOR 404 OR NON-404 STREAMS ONLY ~
SEDIMENT CONTROL AT PHASED CONSTRUCTION OF BRIDGE CLASS CULVERTS

SCF	SEDIMENT CONTROL FENCE
RFD2	ROCK FILTER DAM (TY 2)
RFD3	ROCK FILTER DAM (TY 3)
	DIRECTION OF FLOW

NOTES:

① START SEDIMENT CONTROL AT LOCATION SO ALL STORM WATER WITH SEDIMENT IS COLLECTED

② ROCK FILTER DAMS OR EARTH/GRASSED EMBANKMENTS CAN BE SUBSTITUTED AS DIRECTED.

③ PROVIDE A SMOOTH TRANSITION FROM THE INVERT ELEVATIONS BETWEEN CULVERTS. REMOVE LOOSE SOIL FROM EXCAVATED AREA BETWEEN CULVERTS.

④ PROVIDE AND INSTALL PNEUMATICALLY PLACED CONCRETE ON THE DITCH BOTTOM AND SIDE SLOPES BETWEEN TEMPORARY TERMINATIONS BETWEEN OLD AND NEW CULVERTS. PNEUMATICALLY PLACED CONCRETE WILL BE PLACED TO THE HEIGHT OF THE LARGEST CULVERT ON THE DITCH SIDE SLOPES; AND TO A LIMIT 10 FEET OUTSIDE THE LOCATION OF BMPS ALONG THE DITCH BOTTOM. CEMENT STABILIZED SAND MAY BE SUBSTITUTED FOR PNEUMATICALLY PLACED CONCRETE, IN AREAS WHERE INSTALLATION WORKS AND AT THE OPTION OF TXDOT.

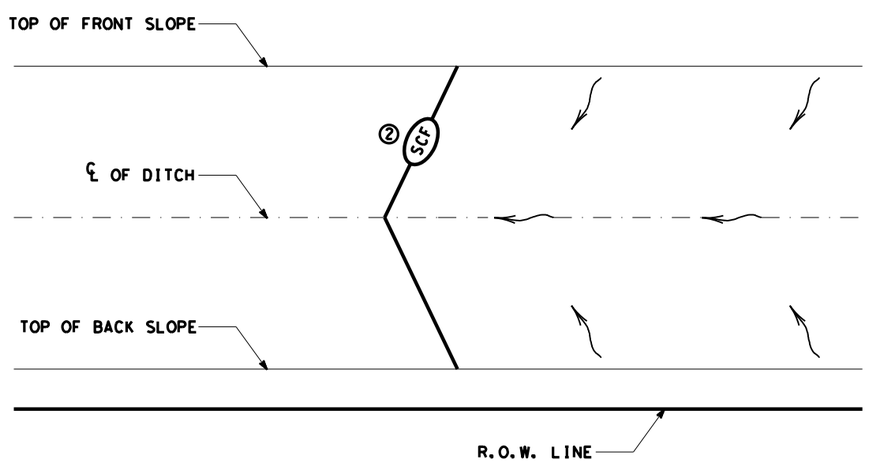

BEST MANAGEMENT PRACTICE (BMP) #11

BOUNDRY SEDIMENT CONTROL ~ BOTH ENDS OF CONTROL TERMINATED UP SLOPE

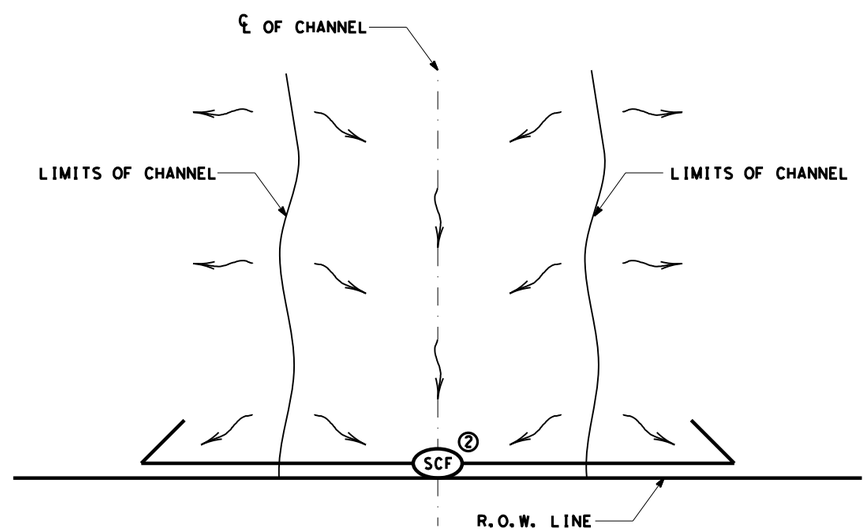

BEST MANAGEMENT PRACTICE (BMP) #12

BOUNDRY SEDIMENT CONTROL ~ BOTH ENDS OF CONTROL TERMINATED DOWN SLOPE

SCALE = NTS SHEET 7 OF 10

Texas Department of Transportation
Waco District Standard

TYPICAL APPLICATIONS FOR BEST MANAGEMENT PRACTICES

TA-BMP

FILE: BMPLAYOUTS.dgn	DN: TXDOT	CK: TXDOT	DW: TXDOT	CK: TXDOT
© TxDOT 2009	CONT	SECT	JOB	HIGHWAY
REVISIONS DEC 2013 FEB 2015	0231	03	156	IH-14
	DIST		COUNTY	SHEET NO.
	WACO		BELL	145

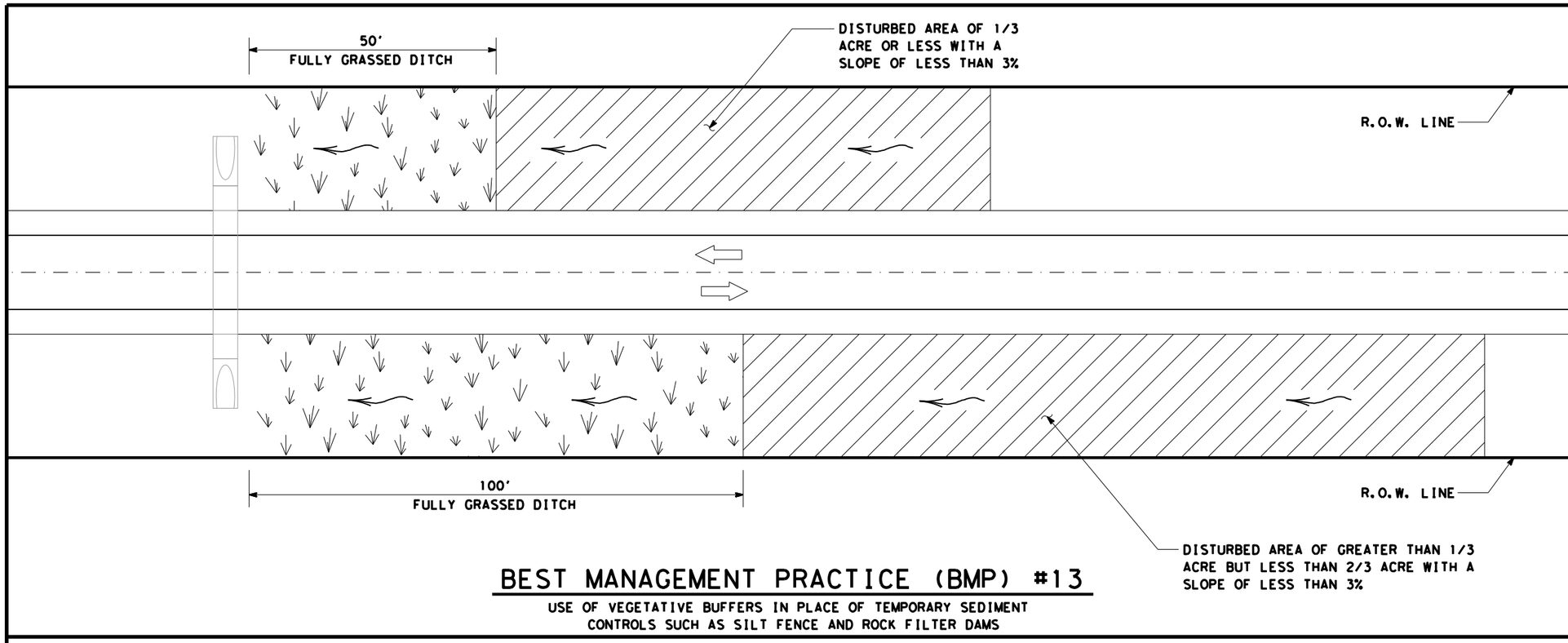

BEST MANAGEMENT PRACTICE (BMP) #13

USE OF VEGETATIVE BUFFERS IN PLACE OF TEMPORARY SEDIMENT CONTROLS SUCH AS SILT FENCE AND ROCK FILTER DAMS

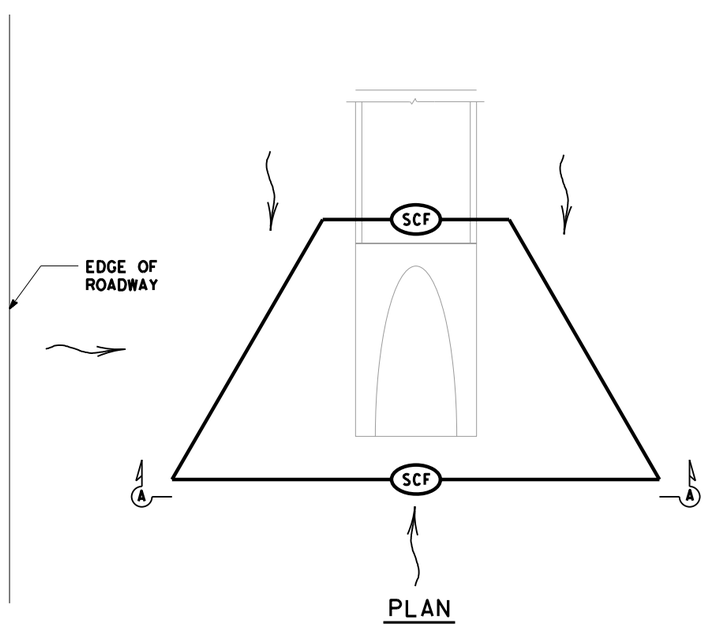

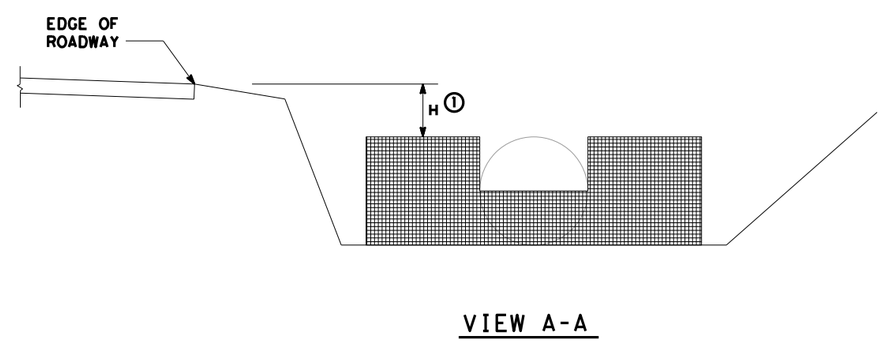

BEST MANAGEMENT PRACTICE (BMP) #14

NON-404 STREAMS AND DITCHES ONLY ~ SEDIMENT CONTROL AT PARALLEL DRAINAGE STRUCTURE ENTRANCE ②

	FULLY GRASSED DITCH
	DISTURBED AREA
	DIRECTION OF FLOW
SCF	SEDIMENT CONTROL FENCE

① FOR H DIMENSIONS LESS THAN 1.5' SILT FENCE MAY NEED TO BE NOTCHED AS SHOWN IN VIEW A-A. ADD EXTRA POSTS AT NOTCH.

② BMP #14 MAY BE USED AT CROSS DRAINAGE STRUCTURES AS DIRECTED.

SCALE = NTS SHEET 8 OF 10

Texas Department of Transportation
Waco District Standard

TYPICAL APPLICATIONS FOR BEST MANAGEMENT PRACTICES

TA-BMP

FILE: BMPLAYOUTS.dgn	DN: TXDOT		CK: TXDOT	DW: TXDOT	CK: TXDOT
© TxDOT 2009	CONT	SECT	JOB	HIGHWAY	
REVISIONS DEC 2013 FEB 2015	0231	03	156	IH-14	
	DIST		COUNTY		SHEET NO.
	WACO		BELL		146

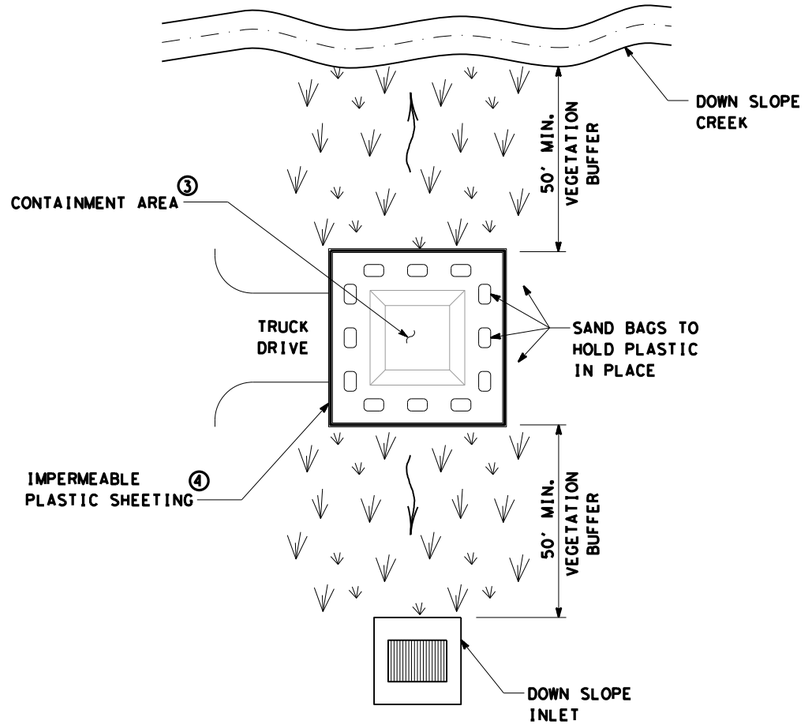

BEST MANAGEMENT PRACTICE (BMP) #15

CONCRETE TRUCK WASHOUT AREA

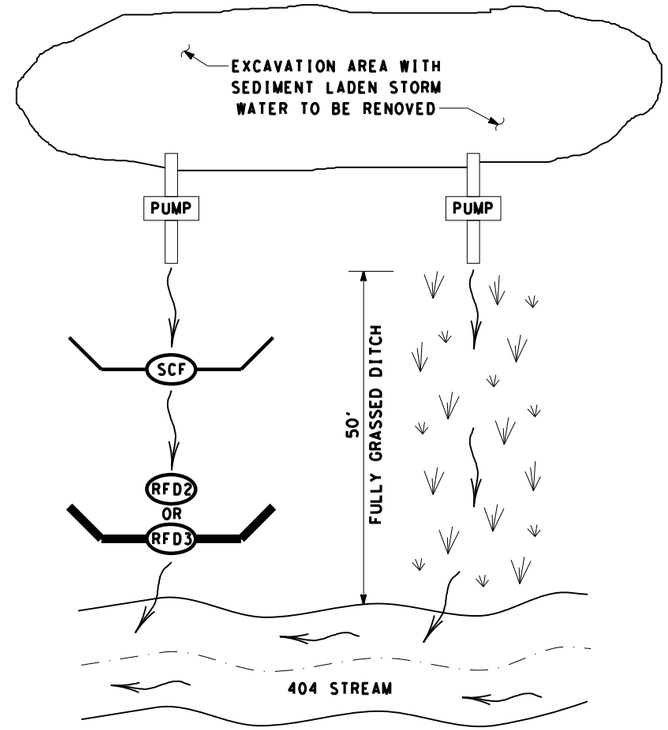

BEST MANAGEMENT PRACTICE (BMP) #16

PUMPED STORM WATER SEDIMENT CONTROLS ①

	FULLY GRASSED DITCH
	DIRECTION OF FLOW
SCF	SEDIMENT CONTROL FENCE
RFD2	ROCK FILTER DAM (TY 2)
RFD3	ROCK FILTER DAM (TY 3)

① PUMPED STROM WATER FROM AN EXCAVATION AREA SHOULD BE DISCHARGED IN A 50' VEGETATIVE BARRIER OR THROUGH TWO TEMPORARY SEDIMENT CONTROLS BEFORE ENTERING A 404 STREAM.

② FOR LANDOWNER STOCKPONDS WITHIN 50' OF THE RIGHT OF WAY LINE, PROVIDE REDUNDANT SEDIMENT CONTROLS AT THE CONVEYANCE OF THE POND. MINIMUM OF TWO SEDIMENT CONTROLS.

③ WHEN CONTAINMENT AREA REACHES 1' FREEBOARD, DISCONTINUE WASHOUT PLACEMENT AND REMOVE MATERIAL UPON SOLIDIFICATION.

④ EACH TIME SOLIDIFIED MATERIAL IS REMOVED REPLACE PLASTIC SHEETING.

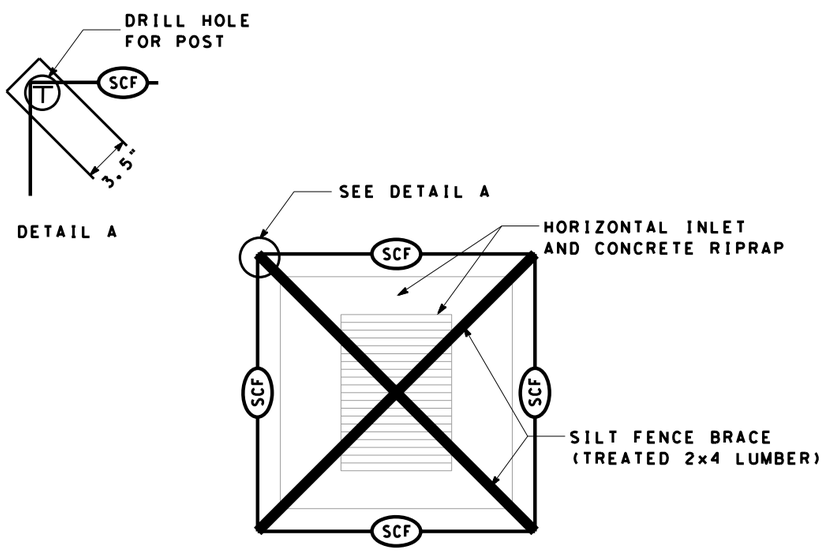

BEST MANAGEMENT PRACTICE (BMP) #17

HORIZONTAL INLET SEDIMENT CONTROL

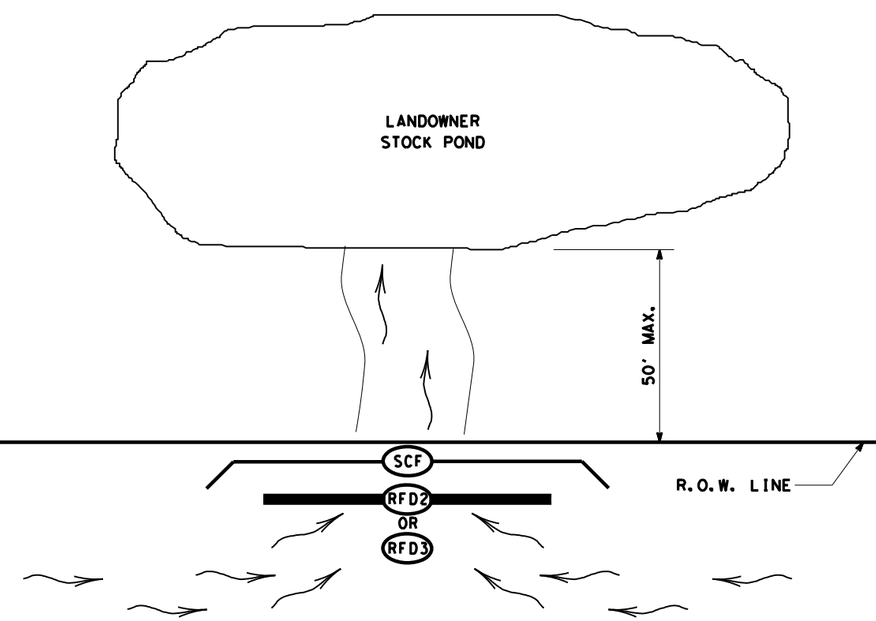

BEST MANAGEMENT PRACTICE (BMP) #18

LANDOWNER STOCKPOND SEDIMENT CONTROL ②

SCALE = NTS SHEET 9 OF 10

Texas Department of Transportation
Waco District Standard

TYPICAL APPLICATIONS FOR BEST MANAGEMENT PRACTICES

TA-BMP

FILE: BMPLAYOUTS.dgn	DN: TXDOT	CK: TXDOT	DW: TXDOT	CK: TXDOT
© TxDOT 2009	CONT	SECT	JOB	HIGHWAY
REVISIONS DEC 2013 FEB 2015	0231	03	156	IH-14
	DIST		COUNTY	SHEET NO.
	WACO		BELL	147

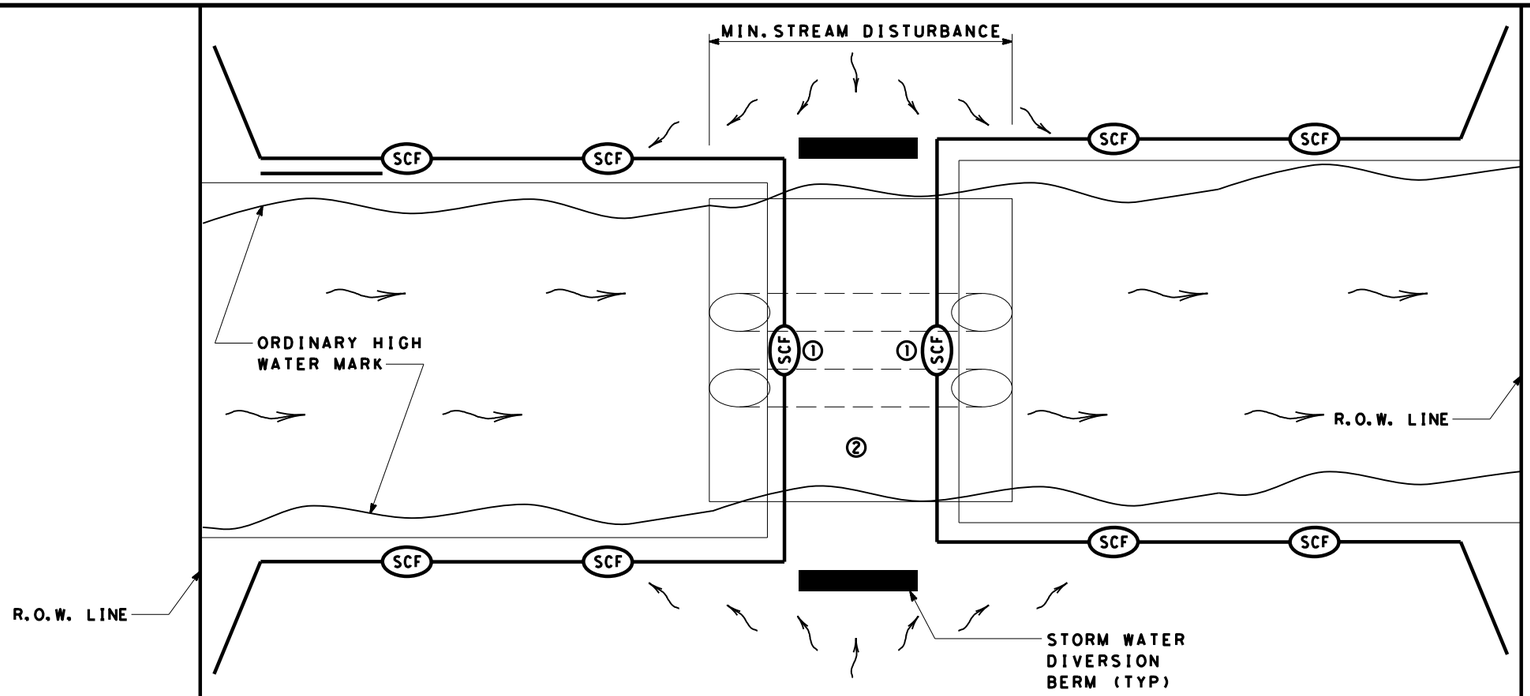

BEST MANAGEMENT PRACTICE (BMP) #19

TYPICAL 404 STREAM CROSSING (SEDIMENT CONTROL AT CROSSING)

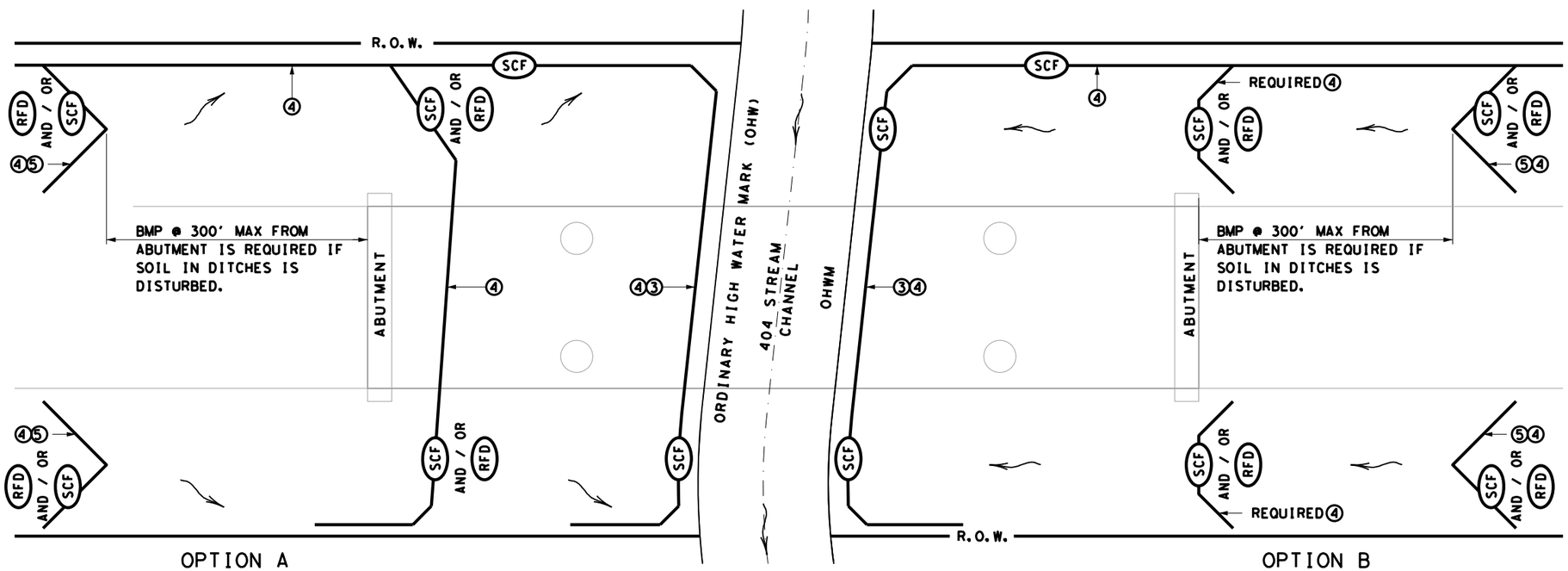

BEST MANAGEMENT PRACTICE (BMP) #20

FOR 404 STREAMS ~ BMP'S AT BRIDGES

	DIRECTION OF FLOW
SCF	SEDIMENT CONTROL FENCE
RFD	ROCK FILTER DAM
	SECURITY FENCING

① HAY BALES MAY BE SUBSTITUTED FOR SILT FENCE OVER THE STREAM CROSSING.

② CROSSING WILL BE AS PER REQUIREMENTS OF THE WATERS OF THE US GENERAL NOTES.

③ INSTALL SILT FENCE SLIGHTLY UP FROM OHW MARK FROM R.O.W. TO R.O.W.

④ USE SILT FENCE L-HOOKS ON LEVEL OR DOWN SLOPING ENDS TO BLOCK STORM WATER SEDIMENT

⑤ INSTALL LARGE V OR U SHAPED BMP'S FROM ABUTMENT AS SHOWN. IF THERE IS STEEP DITCH CONDITIONS DECREASE SPACING AND CONSIDER RFD'S. ADD ADDITIONAL BMP'S IF GRADE IS STEEP OR IF FLOW IS HIGH.

SCALE = NTS SHEET 10 OF 10

Texas Department of Transportation
Waco District Standard

TYPICAL APPLICATIONS FOR BEST MANAGEMENT PRACTICES

TA-BMP

FILE: BMPLAYOUTS.dgn	DN: TXDOT		CK: TXDOT	DW: TXDOT	CK: TXDOT	
© TxDOT 2009	CONT	SECT	JOB	HIGHWAY		
REVISIONS DEC 2013 FEB 2015	0231	03	156	IH-14		
	DIST		COUNTY		SHEET NO.	
	WACO		BELL		148	

DISCLAIMER:
The use of this standard is governed by the "Texas Engineering Practice Act". No warranty of any kind is made by TxDOT for any purpose whatsoever. TxDOT assumes no responsibility for the conversion of this standard to other formats or for incorrect results or damages resulting from its use.

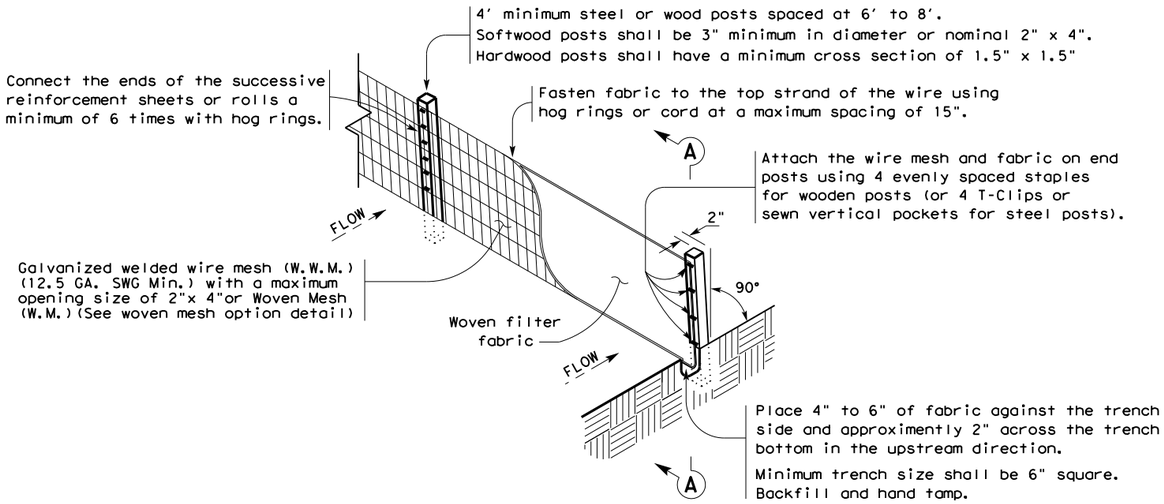

TEMPORARY SEDIMENT CONTROL FENCE

SCF

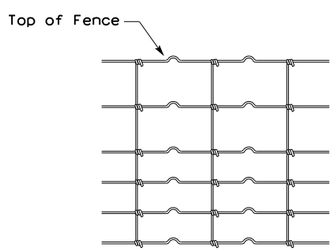

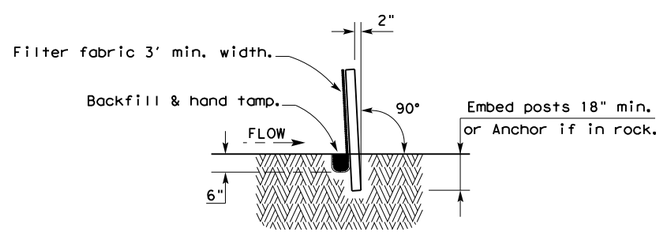

SECTION A-A

HINGE JOINT KNOT WOVEN MESH (OPTION) DETAIL

Galvanized hinge joint knot woven mesh (12.5 GA.SWG Min.) requires a minimum of five horizontal wires spaced at a maximum of 12 inches apart and all vertical wires spaced at a maximum of 12 inches apart.

SEDIMENT CONTROL FENCE USAGE GUIDELINES

A sediment control fence may be constructed near the downstream perimeter of a disturbed area along a contour to intercept sediment from overland runoff. A 2 year storm frequency may be used to calculate the flow rate to be filtered.

Sediment control fence should be sized to filter a maximum flow through rate of 100 GPM/FT^2. Sediment control fence is not recommended to control erosion from a drainage area larger than 2 acres.

LEGEND

Sediment Control Fence

SCF

GENERAL NOTES

1. Vertical tracking is required on projects where soil distributing activities have occurred unless otherwise approved.
2. Perform vertical tracking on slopes to temporarily stabilize soil.
3. Provide equipment with a track undercarriage capable of producing linear soil impressions measuring a minimum of 12" in length by 2" to 4" in width by 1/2" to 2" in depth.
4. Do not exceed 12" between track impressions.
5. Install continous linear track impressions where the minimum 12" length impressions are perpendicular to the slope or direction of water flow.

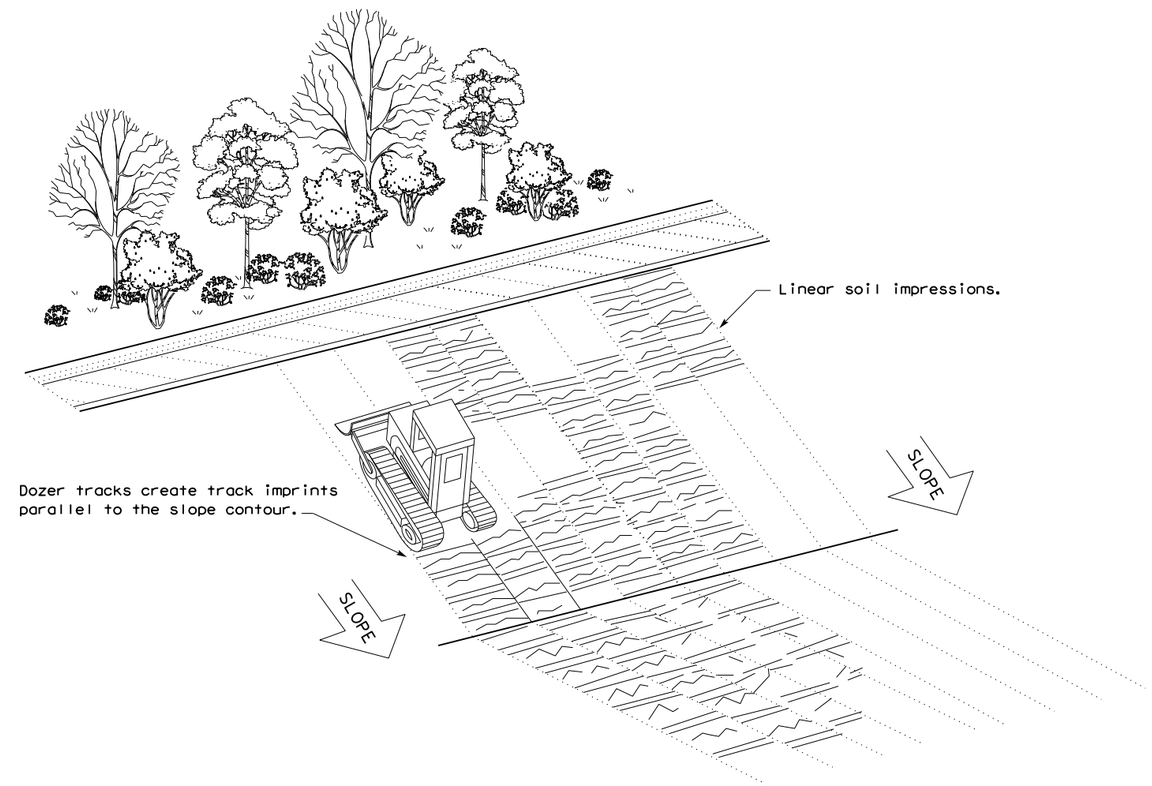

VERTICAL TRACKING

Texas Department of Transportation

Design Division Standard

TEMPORARY EROSION, SEDIMENT AND WATER POLLUTION CONTROL MEASURES

FENCE & VERTICAL TRACKING

EC(1)-16

FILE: ec116	DN: TxDOT	CK: KM	DW: VP	DN/CK: LS
© TxDOT: JULY 2016	CONT	SECT	JOB	HIGHWAY
REVISIONS	0231	03	156	IH-14
	DIST	COUNTY		SHEET NO.
	WACO	BELL		149

7DATE2025
cFILE&dot\pw_online\txdot3\patrick.jalufka\d0807986\ec116.dgn

DISCLAIMER:
The use of this standard is governed by the "Texas Engineering Practice Act". No warranty of any kind is made by TxDOT for any purpose whatsoever. TxDOT assumes no responsibility for the conversion of this standard to other formats or for incorrect results or damages resulting from its use.

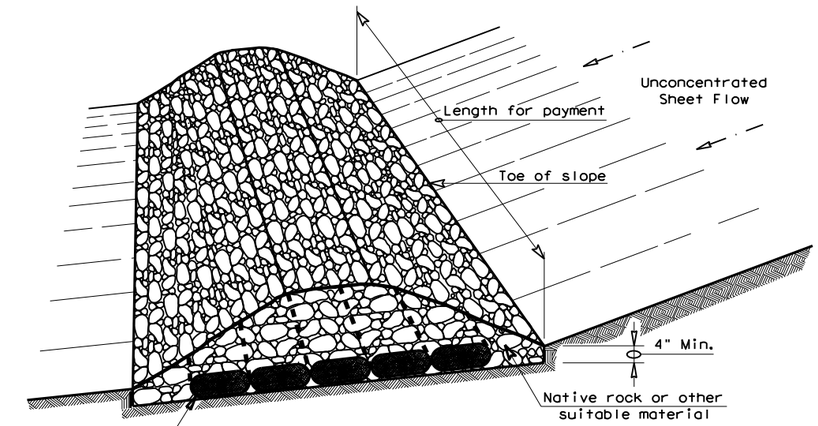

FILTER DAM AT TOE OF SLOPE

RFD1

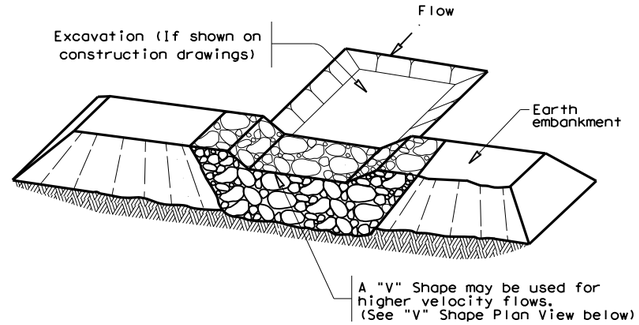

FILTER DAM AT SEDIMENT TRAP

RFD1 OR RFD2

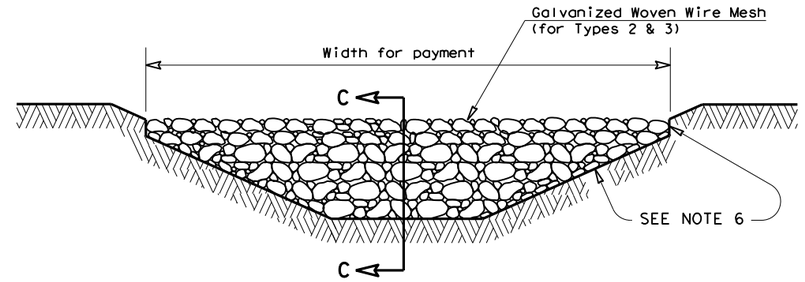

FILTER DAM AT CHANNEL SECTIONS

RFD1 OR RFD2 OR RFD3

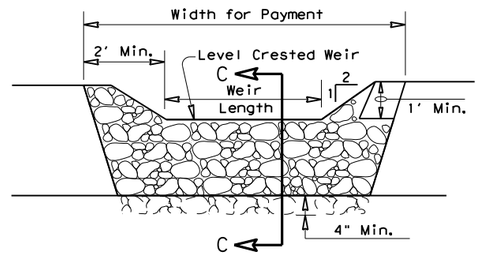

PROFILE

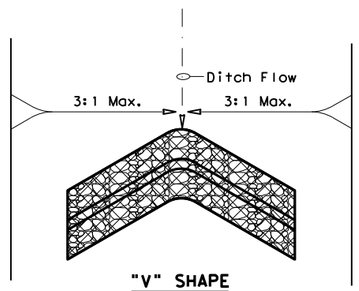

"V" SHAPE
PLAN VIEW

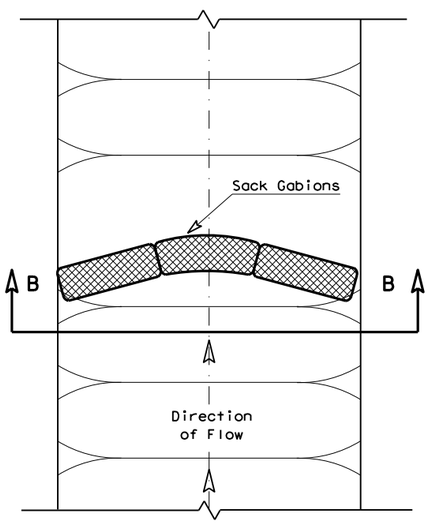

PLAN VIEW

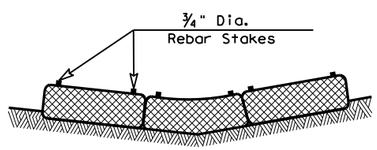

SECTION B-B

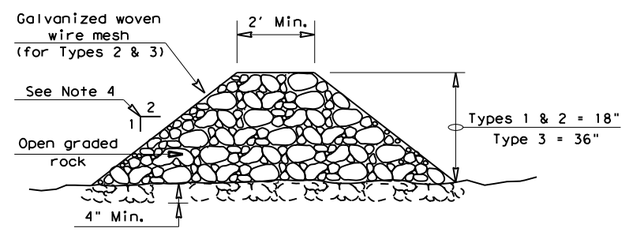

SECTION C-C

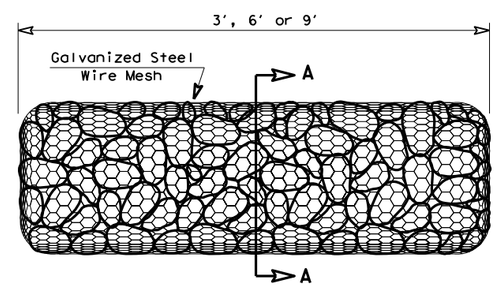

TYPE 4 (SACK GABIONS)

RFD4

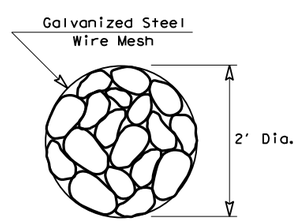

SECTION A-A

ROCK FILTER DAM USAGE GUIDELINES

Rock Filter Dams should be constructed downstream from disturbed areas to intercept sediment from overland runoff and/or concentrated flow. The dams should be sized to filter a maximum flow through rate of 60 GPM/FT^2 of cross sectional area. A 2 year storm frequency may be used to calculate the flow rate.

Type 1 (18" high with no wire mesh) (3" to 6" aggregate): Type 1 may be used at the toe of slopes, around inlets, in small ditches, and at dike or swale outlets. This type of dam is recommended to control erosion from a drainage area of 5 acres or less. Type 1 may not be used in concentrated high velocity flows (approximently 8 Ft/Sec or more) in which aggregate wash out may occur. Sandbags may be used at the embedded foundation (4" deep min.) for better filtering efficiency of low flows if called for on the plans or directed by the Engineer.

Type 2 (18" high with wire mesh) (3" to 6" aggregate): Type 2 may be used in ditches and at dike or swale outlets.

Type 3 (36" high with wire mesh) (4" to 8" aggregate): Type 3 may be used in stream flow and should be secured to the stream bed.

Type 4 (Sack gabions) (3" to 6" aggregate): Type 4 May be used in ditches and smaller channels to form an erosion control dam.

Type 5: Provide rock filter dams as shown on plans.

GENERAL NOTES

1. If shown on the plans or directed by the Engineer, filter dams should be placed near the toe of slopes where erosion is anticipated, upstream and/or downstream at drainage structures, and in roadway ditches and channels to collect sediment.
2. Materials (aggregate, wire mesh, sandbags, etc.) shall be as indicated by the specification for "Rock Filter Dams for Erosion and Sedimentation Control".
3. The rock filter dam dimensions shall be as indicated on the SW3P plans.
4. Side slopes should be 2:1 or flatter. Dams within the safety zone shall have sideslopes of 6:1 or flatter.
5. Maintain a minimum of 1' between top of rock filter dam weir and top of embankment for filter dams at sediment traps.
6. Filter dams should be embedded a minimum of 4" into existing ground.
7. The sediment trap for ponding of sediment laden runoff shall be of the dimensions shown on the plans.
8. Rock filter dam types 2 & 3 shall be secured with 20 gauge galvanized woven wire mesh with 1" diameter hexagonal openings. The aggregate shall be placed on the mesh to the height & slopes specified. The mesh shall be folded at the upstream side over the aggregate and tightly secured to itself on the downstream side using wire ties or hog rings. For in stream use, the mesh should be secured or staked to the stream bed prior to aggregate placement.
9. Sack Gabions should be staked down with ¾" dia. rebar stakes, and have a double-twisted hexagonal weave with a nominal mesh opening of 2 ½" x 3 ¼"
10. Flow outlet should be onto a stabilized area (vegetation, rock, etc.).
11. The guidelines shown hereon are suggestions only and may be modified by the Engineer.

PLAN SHEET LEGEND

Type 1 Rock Filter Dam	RFD1
Type 2 Rock Filter Dam	RFD2
Type 3 Rock Filter Dam	RFD3
Type 4 Rock Filter Dam	RFD4

Texas Department of Transportation — Design Division Standard

TEMPORARY EROSION, SEDIMENT AND WATER POLLUTION CONTROL MEASURES

ROCK FILTER DAMS

EC(2)-16

FILE: ec216	DN: TxDOT	CK: KM	DW: VP	DN/CK: LS
© TxDOT: JULY 2016	CONT	SECT	JOB	HIGHWAY
REVISIONS	0231	03	156	IH-14
	DIST		COUNTY	SHEET NO.
	WACO		BELL	150

DATE: 7/11/2025
FILE: c:\txdot\pw_online\txdot3\patrick.jalufka\d0807986\ec216.dgn