CHANGE ORDER(S) FOR

Chaparral Pump Station

(Project Name)

Department/Division:	Engineering Services	**Bid No.:**	24-21
Vendor Name:	SSP Industries, LP		
Original Contract Amount:	$7,916,365.00	**CCMR No.:**	24-036R
Date CCMR Approved:	02/27/24		

NOTE

1. If individual Change Order request is ≥ $50,000, please attach CCMR in front of Change Order request for Council approval
2 No Change Order can cumulatively be greater than 25% of awarded contract amount

HISTORY OF CHANGE ORDERS

CO#	Proposed or Approved	Date CCMR Approved	CCMR#	Amount	Account Number (xxx-xxxx-xxx-xx.xx)	BRIEF Reason for Change Order Request (must fit in allotted space)	Updated Contract Amount	% Change in Contract
1	☐ Proposed ☑ Approved			$19,587.17	363-8934-493.69-03	Increase due to additional site excavation and dirt haul off	$7,935,952.17	0.25%
2	☐ Proposed ☑ Approved			$16,510.02	354-56201-900-400-921015	Increases and decreases as outlined in attached change order	$7,952,462.19	0.46%
3	☐ Proposed ☑ Approved			$46,063.00	354-56201-900-400-921015	Increase for realignment of 24-inch transmission main	$7,998,525.19	1.04%
4	☑ Proposed ☐ Approved			$47,383.00	354-56201-900-400-921015	Increase for reconstruction of water tank drainage flume	$8,045,908.19	1.64%
5	☐ Proposed ☐ Approved						$8,045,908.19	1.64%
6	☐ Proposed ☐ Approved						$8,045,908.19	1.64%
7	☐ Proposed ☐ Approved						$8,045,908.19	1.64%
8	☐ Proposed ☐ Approved						$8,045,908.19	1.64%
9	☐ Proposed ☐ Approved						$8,045,908.19	1.64%
10	☐ Proposed ☐ Approved						$8,045,908.19	1.64%

Project Manager/Date

Dept. Head Signature/Date

Recommended:

Dir. Of Procurement & Contract Mgmt/Date

Recommended:

Director of Finance/Date

Recommended:

City Attorney/Date

Approved/Disapproved:

City Manager/Date

CHANGE ORDER FORM

Change Order No. 4

Date of Issuance: 04/14/2025 Effective Date: _____

Project Name: Chaparral Pump Station Re-Bid	**Owner's Contract No.:** PO 242471
Owner: City of Killeen	**Date of Contract:** March 18, 2024
Contractor: SSP Industries, LP	**Project No.:** KIL17231

You are directed to make the following changes in the Contract Documents:

Description:

(Reference RCP-003) Change to the tank overflow drainage flume: Price change of $47,383.00, no change in time.

Reason for Change Order:

(Reference RCP-003) The tank drainage flume currently drains to an existing stock pond on the adjacent property. The adjacent property owner plans to fill the pond and develop houses. The tank drainage flume is being adjusted to slow down the flow, spread out the flow and direct the flow downstream of the stock pond.

Attachments (list documents supporting change):

Request for Change Proposal RCP-003 – Tank Overflow Drainage Flume Revision

CHANGE IN CONTRACT PRICE:	CHANGE IN CONTRACT TIMES:
Original Contract Price:	Original Contract Times: ☐ Working days ☒ Calendar days
	Substantial completion (days): 720 (03/08/2026)
$ 7,916,365.00	Ready for final payment (days): 790 (05/17/2026)
Increase from previously approved Change Orders No. 1 to No. 3:	Increase from previously approved Change Orders No. 1 to No. 3:
	Substantial completion (days): 26
$ 82,160.19	Ready for final payment (days): 26
Contract Price prior to this Change Order:	Contract Times prior to this Change Order:
	Substantial completion (days): 746 (04/03/2026)
$ 7,998,525.19	Ready for final payment (days): 816 (06/12/2026)
Increase of this Change Order:	Increase of this Change Order:
	Substantial completion (days): 0
$ 47,383.00	Ready for final payment (days): 0
Contract Price incorporating this Change Order:	Contract Times with all approved Change Orders:
	Substantial completion (days): 746 (04/03/2026)
$ 8,045,908.19	Ready for final payment (days): 816 (06/12/2026)

RECOMMENDED:	ACCEPTED:	ACCEPTED:
By: 04/14/2025 11:38:14 AM	By:	By:
Engineer (Authorized Signature)	Owner (Authorized Signature)	Contractor (Authorized Signature)
Date: April 14, 2025	Date:	Date: 04/17/2025

Request for Change Proposal

Project	Chaparral Pump Station	**Project Number**	
Owner	City of Killeen		KIL17231
Builder	SSP Industries, LP		
Designer	Freese and Nichols, Inc.		
CM	Jorge Garces		

RCP No.	RCP-003	**Builder Submittal No.**	
Specification			
Drawing / Detail	C-1, C-2, DT-3, DT-6, DT-7		

NOTIFICATION TO BUILDER

The Owner proposes to make the following additions, modifications or deletions to the work described in the Contract Documents. Authorization to proceed with these changes must be approved by Field Order or Change Order in accordance with the Contract Documents, prior to commencing the work involved.

Submit a Price/Credit Proposal with detailed cost breakdown of labor, materials, equipment and all other costs related to this change. Impacts on Contract Time shall be shown in a revised schedule, included with the submitted proposal.

Comments	Revisions to the tank overflow drainage flume.		
Attachment	RCP-003-Tank Overflow Drainage Flume Revisions-Jorge Garces-Pending.pdf		
Submitted By	Jorge Garces	**Date**	02/18/2025

BUILDER'S RESPONSE

We respond to your request as follows:

We submit the attached Price/Credit Proposal with detailed cost breakdown and revised schedule for performing the described change.

Cost Impact	$47,383.00
Time Impact	0 Days
Comments	Revisions to the tank overflow drainage flume.
Attachments	RCP-003-Tank Overflow Drainage Flume Revisions-Jorge Garces-Pending.pdf RCP-003-Tank Overflow Drainage Flume Revisions-Nathan Brooks-Pending.pdf

CONSTRUCTION MANAGER'S RESPONSE

Status	Change Order will be Issued		
Action	Final Distribution		
Comments	Recommend for approval.		
Returned By	Jorge Garces	**Date**	03/28/2025

SSP Industries, LP

3453 N. PanAm Expy, San Antonio, Texas 78219
2749 Chaparral Rd, Killeen, TX 76542
P.O. Box # 690159, Killeen, Texas 76549
Phone: (254)699-2115, Fax: (254)554-6164

Change Order Pricing

Project Name: **Chaparral Pump Station - Revised EST Overflow Flume (RCP-003)**

Project Location:	Owner:		
3751 Chaparral Rd. Killeen, TX	City of Killeen Attn: Freese and Nichols c/o: Daniel Stoutenburg	Quote #: Bid Date: Expiration Date: Quote By: Prepared By:	25057-02 February 26, 2025 May 27, 2025 Ron Fournier Jared Potts

SCOPE:

DEDUCT Demolition and Prep of Flume Remove Labor, Materials, and Equipment for the following (Item no. 74 on SOV): All demo and prepatory work for existing flume revisions.

DEDUCT Concrete Placement of Flume Remove Labor, Materials, and Equipment for the following (Item no. 75 on SOV): 15 SY of concrete placement and finish out.

DEDUCT Rip Rap Placement at end of Flume Remove Labor, Materials, and Equipment for the following (Item no. 76 on SOV): 200 SF of bedding and rip rap placement.

ADD Rework EST Overflow Concrete Provide Labor, Materials, and Equipment for the following: Saw cutting existing walls and floors at EST overflow flume box, breakup saw cut concrete and prep area for new concrete with compacted native soil, form and rebar for updated floor and walls, 6 CY of concrete placement for revised floor and walls, wreck all formwork, haul off of spoils, and clean up.

ADD New Concrete Flume Provide Labor, Materials, and Equipment for the following: Saw cutting and demolishing existing flume entirely, prep proposed area with compacted native soil, form and rebar for new concrete flume, 13 CY of concrete placement for new concrete flume, (2) grating structures at fence, haul off of spoils, and clean up.

ADD New Rip Rap End Treatments Provide Labor, Materials, and Equipment for the following: 12 SY of 24" rip rap and bedding placement, 63 SY of 8" rip rap and bedding placement, haul off of spoils, and clean up.

Item #	Description	Qty	Unit Issue	Unit Price	Unit Total
1	DEDUCT Demolition and Prep of Flume (item no. 74 on SOV)	1	LS	-$2,156.00	-$2,156.00
2	DEDUCT Concrete Placement of Flume (item no. 75 on SOV)	1	LS	-$2,313.00	-$2,313.00
3	DEDUCT Rip Rap (item no. 76 on SOV)	1	LS	-$1,872.00	-$1,872.00
4	ADD Rework EST Overflow Concrete	1	LS	$16,737.00	$16,737.00
5	ADD New Concrete Flume	1	LS	$24,180.00	$24,180.00
6	ADD New Rip Rap	1	LS	$12,807.00	$12,807.00
				Total Cost	**$47,383.00**

Pricing per revised design sheets dated 02/07/2025 and RCP-003 dated 02/18/2025.

We are pleased to announce that we are now a registered certified HUB Woman Owned Business - Certification # 35625.

All material is guaranteed to be as specified. All work to be completed in a professional manner according to standard practices. Any alteration or deviation from above specs involving extra costs will be executed only upon written orders & will be an extra charge over and above the estimate. All agreements are contingent upon delays beyond our control. Purchaser agrees to pay all costs of finance charges & collection fees, including attorney's fees. License numbers: M-19245 & TACLB005229E. Sec 8A of the plumbing license law requires that any plumbing contract in the State of Texas must contain the name, mailing address and phone number of the Texas State Board of Plumbing Examiners. That address is as follows: 929 E. 41st, P.O. Box 4200, Austin, Texas 78765, (512) 458-2145, (800) 845-6584. Sec 75.70(m) of 16 TEXADMIN CODE regarding A/C & Refrigeration contracting states a license holder must have the following info: TX Dept. of Lic. & Reg., P. O. Box # 12157, Austin, Texas 78711, (800) 803-9202.

30 Years of Customer Service ***Pipeline, Plant, Site Utilities and Commercial Plumbing***

NOTES:

1. CONTRACTOR TO VERIFY LOCATION AND DEPTH OF ALL UTILITIES PRIOR TO BEGINNING OF CONSTRUCTION.
2. THE EXISTENCE AND LOCATIONS OF ALL KNOWN UNDERGROUND UTILITIES SHOWN ON THE DRAWINGS WERE OBTAINED FROM AVAILABLE RECORDS AND ARE APPROXIMATE. NEITHER THE OWNER NOR THE ENGINEER ASSUMES ANY RESPONSIBILITY FOR UTILITIES NOT SHOWN OR NOT IN THE LOCATION SHOWN. THE CONTRACTOR TO DETERMINE THE DEPTH AND LOCATION OF EXISTING UNDERGROUND UTILITIES PRIOR TO TRENCHING AND TO BE REQUIRED TO TAKE ANY PRECAUTIONARY MEASURES TO PROTECT ALL LINES SHOWN AND/OR ANY OTHER UNDERGROUND UTILITIES NOT ON RECORD OR NOT SHOWN ON THE PLANS. CONTRACTOR TO BE RESPONSIBLE FOR CONTACTING ALL FRANCHISE AND CITY UTILITIES PRIOR TO CONSTRUCTION. COORDINATION WITH FRANCHISE UTILITY COMPANIES AND LOCATING SHOWN OR NOT SHOWN EXISTING UTILITIES TO BE SUBSIDIARY TO THE PIPE INSTALLATION BID ITEM. DIGTESS TICKETS TO BE SUBMITTED PRIOR TO CONSTRUCTION.
3. CONTRACTOR MAY UTILIZE THE REMAINING SITE FOR STAGING DURING CONSTRUCTION. CONTRACTOR TO CLEAN SITE AND RETURN TO ORIGINAL CONTOURS AND MAINTAIN EXISTING DRAINAGE PATTERNS OUTSIDE OF PROPOSED GRADING AREA UPON COMPLETION. SITE TO BE RETURNED TO ORIGINAL CONDITION OR BETTER. CONTRACTOR TO NOT USE THE ROADWAY FOR STAGING.
4. CONTRACTOR SHALL REGRADE ALL DISTURBED ROADSIDE DITCHES AT A MINIMUM GRADE OF 0.1% WITH A MAXIMUM SIDE SLOPE OF 3:1 (4:1 PREFERRED). ROADSIDE DITCH BOTTOMS SHALL BE AT LEAST 2-FEET WIDE. ROADSIDE DITCH SHALL BE COMPLETELY CONTAINED WITHIN THE ROAD RIGHT-OF-WAY. THERE SHALL BE A MINIMUM OF 4-FEET FROM THE EDGE OF THE PAVEMENT AND THE INSIDE HIGH BANK OF ROADSIDE DITCH. THERE SHALL BE A MINIMUM DISTANCE OF 2-FEET BETWEEN THE OUTSIDE HIGH BANK OF THE DITCH AND THE ROAD RIGHT-OF-WAY.
5. ALL BURIED PIPING JOINTS, FITTINGS AND VALVES MUST BE MECHANICALLY RESTRAINED UNLESS OTHERWISE INDICATED IN THE PLANS.
6. REMOVE EXISTING FENCE AROUND THE CHEMICAL BUILDING AFTER PROPOSED 8' FENCE IS INSTALLED. THIS IS OPERATION WATER FACILITY AND NEEDS TO HAVE A SECURITY FENCE AROUND THE CHEMICAL BUILDING PER STATE REQUIREMENTS.

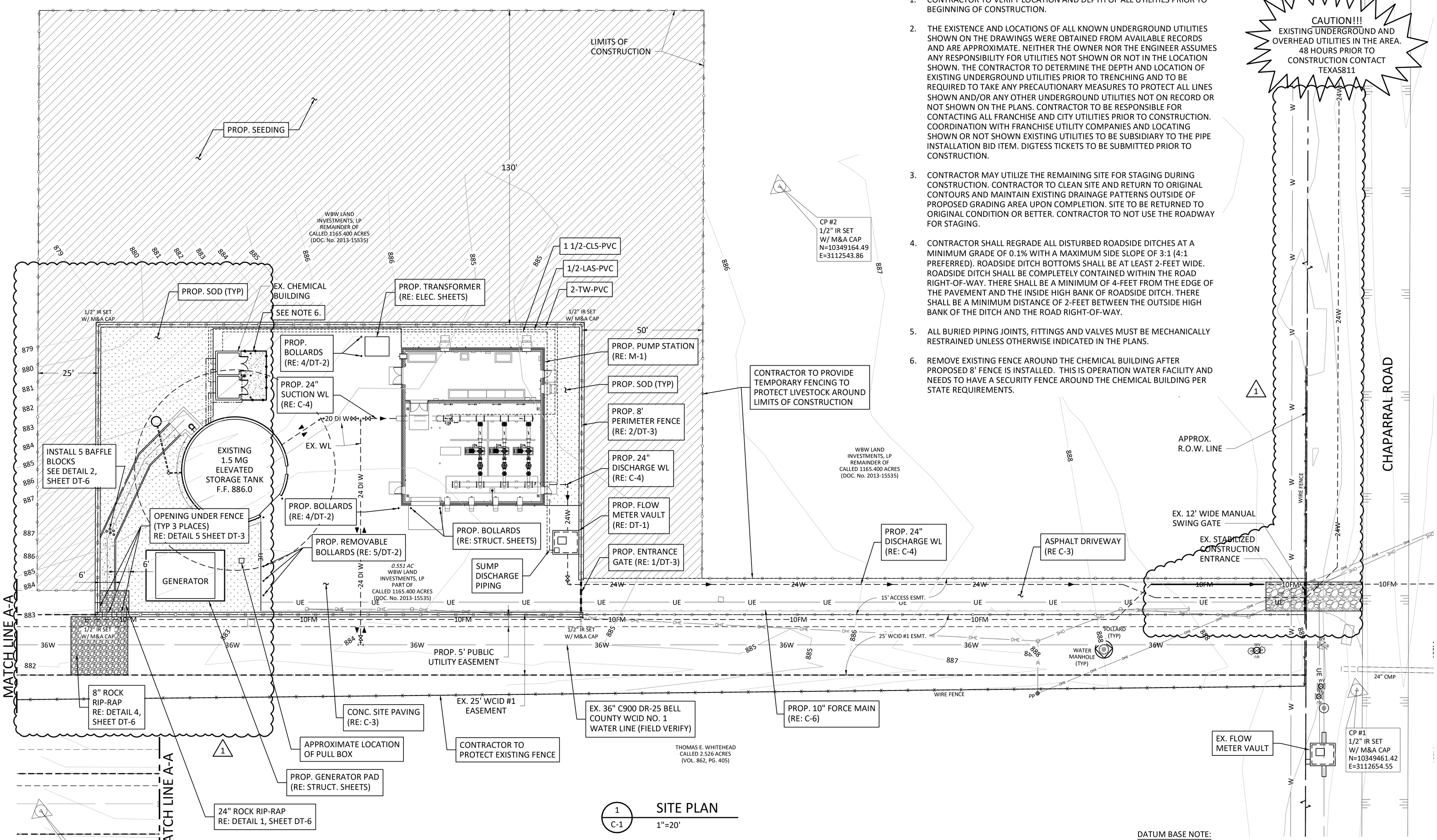

1 / C-1 SITE PLAN
1"=20'

DATUM BASE NOTE:
COORDINATES AND BEARINGS SHOWN HEREON ARE STATE PLANE (NAD 83) FOR THE TEXAS CENTRAL ZONE.
ALL DISTANCES ARE SURFACE.
SURFACE TO GRID SCALE FACTOR=0.9998850132

NOTE:

1. CONTRACTOR SHALL USE THE PROVIDED CONTROL INFORMATION TO ESTABLISH AND PLACE THEIR OWN CONTROL POINTS OF REFERENCE THAT WILL NOT BE DISTURBED BY CONSTRUCTION PROCESSES.

NORTH

0 20' 40'
SCALE IN FEET

Freese and Nichols, Inc.
Texas Registered Engineering Firm F-2144
STATE OF TEXAS
DANIEL STOUTENBURG JR.
99271
LICENSED PROFESSIONAL ENGINEER
02/07/2025 | 11:19:52 AM
FREESE AND NICHOLS
10431 Morado Circle Building 5
Suite 300
Austin, Texas 78759
Phone - (512) 617-3100
Web - www.freese.com

CITY OF KILLEEN, TEXAS
CHAPARRAL PUMP STATION
CIVIL
PROPOSED SITE AND YARD PIPING PLAN

NO.	ISSUE	BY	DATE
1	RCP-002	DGS	02/07/2025

F&N JOB NO. KIL17231
DATE DEC 2023
DESIGNED AL
DRAWN LMR
REVISED -
CHECKED DGS
FILE NAME CV-PST-PL-SITE.dwg

VERIFY SCALE 0 1
Bar is one inch on original drawing. If not one inch on this sheet, adjust scale.

SHEET C-1
SEQ. 5

ACAD Ref: 24.2s (LMS Tech)
Filename: N:\WTU\PS AND EST\Drawings\PS\CV-PST-PL-SITE.dwg
Last Saved: 2/10/2025 1:36 PM Saved By: 02568

Plot Date: 2/10/2025 1:39 PM Plot By: 02568 Filename: N:\WTU\PS AND EST\Drawings\PS\CV-PST-PL-SITE.dwg

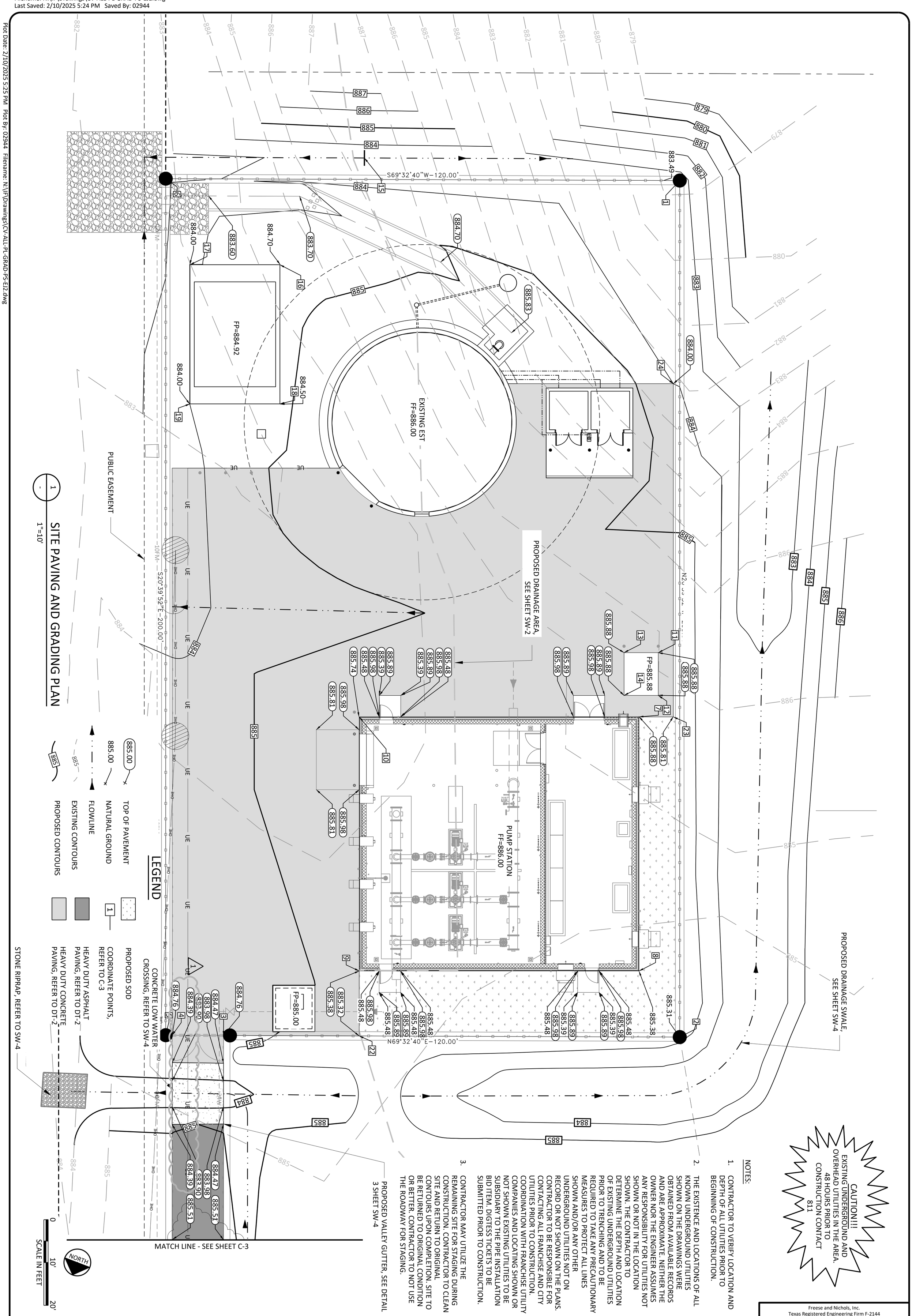

Freese and Nichols, Inc.
Texas Registered Engineering Firm F-2144

CAUTION!!!
EXISTING UNDERGROUND AND OVERHEAD UTILITIES IN THE AREA.
48 HOURS PRIOR TO CONSTRUCTION CONTACT 811

NOTES:

1. CONTRACTOR TO VERIFY LOCATION AND DEPTH OF ALL UTILITIES PRIOR TO BEGINNING OF CONSTRUCTION.
2. THE EXISTENCE AND LOCATIONS OF ALL KNOWN UNDERGROUND UTILITIES SHOWN ON THE DRAWINGS WERE OBTAINED FROM AVAILABLE RECORDS AND ARE APPROXIMATE. NEITHER THE OWNER NOR THE ENGINEER ASSUMES ANY RESPONSIBILITY FOR UTILITIES NOT SHOWN OR NOT IN THE LOCATION SHOWN. THE CONTRACTOR TO DETERMINE THE DEPTH AND LOCATION OF EXISTING UNDERGROUND UTILITIES PRIOR TO TRENCHING AND TO BE REQUIRED TO TAKE ANY PRECAUTIONARY MEASURES TO PROTECT ALL LINES SHOWN AND/OR ANY OTHER UNDERGROUND UTILITIES NOT ON RECORD OR NOT SHOWN ON THE PLANS. CONTRACTOR TO BE RESPONSIBLE FOR CONTACTING ALL FRANCHISE AND CITY UTILITIES PRIOR TO CONSTRUCTION. COORDINATION WITH FRANCHISE UTILITY COMPANIES AND LOCATING SHOWN OR NOT SHOWN EXISTING UTILITIES TO BE SUBSIDIARY TO THE PIPE INSTALLATION BID ITEM. DIGTESS TICKETS TO BE SUBMITTED PRIOR TO CONSTRUCTION.
3. CONTRACTOR MAY UTILIZE THE REMAINING SITE FOR STAGING DURING CONSTRUCTION. CONTRACTOR TO CLEAN SITE AND RETURN TO ORIGINAL CONTOURS UPON COMPLETION. SITE TO BE RETURNED TO ORIGINAL CONDITION OR BETTER. CONTRACTOR TO NOT USE THE ROADWAY FOR STAGING.

PROPOSED VALLEY GUTTER, SEE DETAIL 3 SHEET SW-4

MATCH LINE - SEE SHEET C-3

PROPOSED DRAINAGE SWALE, SEE SHEET SW-4

PROPOSED DRAINAGE AREA, SEE SHEET SW-2

PUMP STATION FF=886.00

EXISTING EST FF=886.00

FP=885.00

FP=885.88

FP=884.92

N69°32'40"E-120.00'

S69°32'40"W-120.00'

S20°39'52"E-200.00'

CONCRETE LOW WATER CROSSING, REFER TO SW-4

STONE RIPRAP, REFER TO SW-4

PUBLIC EASEMENT

NORTH

0 10' 20'
SCALE IN FEET

LEGEND

- TOP OF PAVEMENT
- NATURAL GROUND
- FLOWLINE
- EXISTING CONTOURS
- PROPOSED CONTOURS
- PROPOSED SOD
- COORDINATE POINTS, REFER TO C-3
- HEAVY DUTY ASPHALT PAVING, REFER TO DT-2
- HEAVY DUTY CONCRETE PAVING, REFER TO DT-2

SITE PAVING AND GRADING PLAN

1 - 1"=10'

FREESE AND NICHOLS
10431 Morado Circle Building 5
Suite 300
Austin, Texas 78759
Phone - (512) 617-3100
Web - www.freese.com

CITY OF KILLEEN, TEXAS

CHAPARRAL PUMP STATION

CIVIL

PUMP STATION PAVING AND GRADING PLAN

NO.	ISSUE	BY	DATE
1	RFI #2	IDW	3/18/2024

F&N JOB NO. KIL17231
DATE DEC 2023
DESIGNED IDW
DRAWN IDW
REVISED .
CHECKED BMB
FILE NAME CV-ALL-PL-GRAD-PS-EJ2.dwg

VERIFY SCALE
Bar is one inch on original drawing. If not one inch on this sheet, adjust scale.
0 1

SHEET C-2
SEQ. 6

ISAAC D. WOOD
142408
LICENSED PROFESSIONAL ENGINEER
STATE OF TEXAS
2/10/2025

Plot Date: 2/10/2025 5:25 PM Plot By: 02944 Filename: N:\IF\Drawings\CV-ALL-PL-GRAD-PS-EJ2.dwg

ACAD Rel: 24.2s (LMS Tech)
Filename: N:\IF\Drawings\CV-ALL-PL-GRAD-PS-EJ2.dwg
Last Saved: 2/10/2025 5:24 PM Saved By: 02944

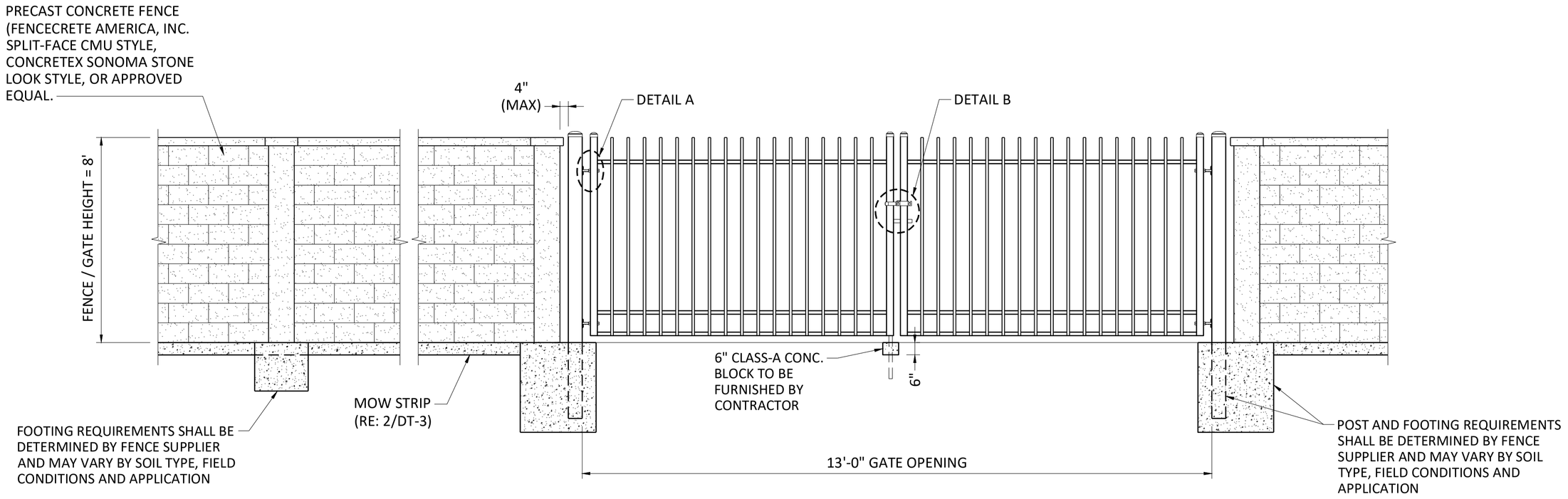

1 / - ENTRY DOUBLE GATE DETAIL

NOT TO SCALE

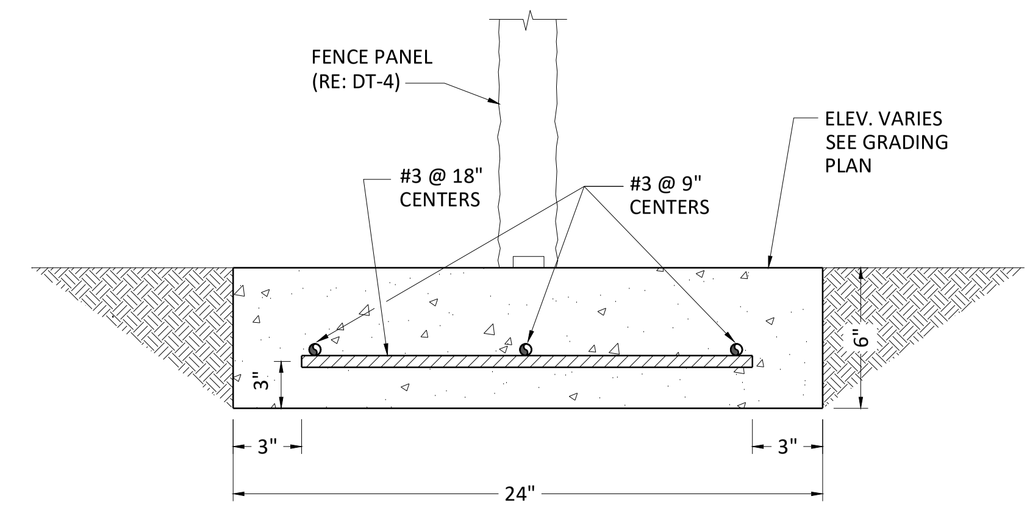

2 / - MOW STRIP TYPICAL CROSS SECTION

NOT TO SCALE

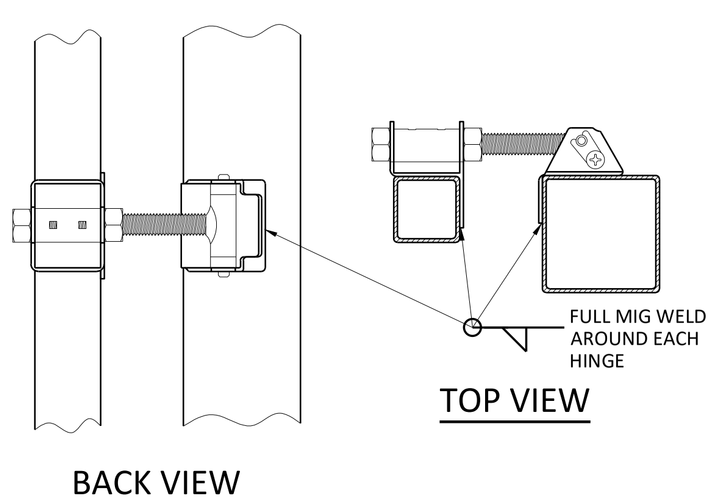

3 / - DETAIL A

NOT TO SCALE

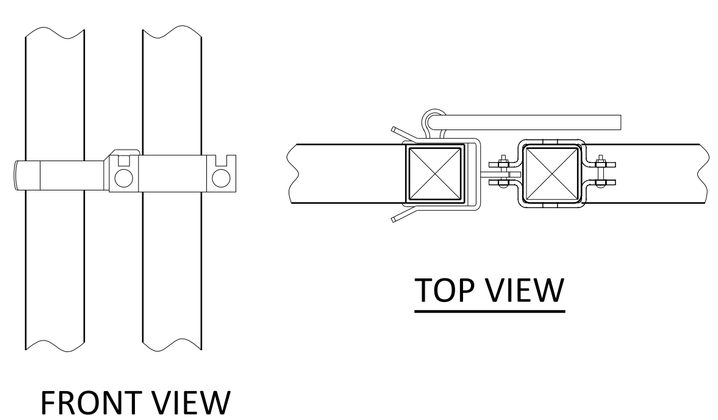

4 / - DETAIL B

NOT TO SCALE

6 / DT-3

1

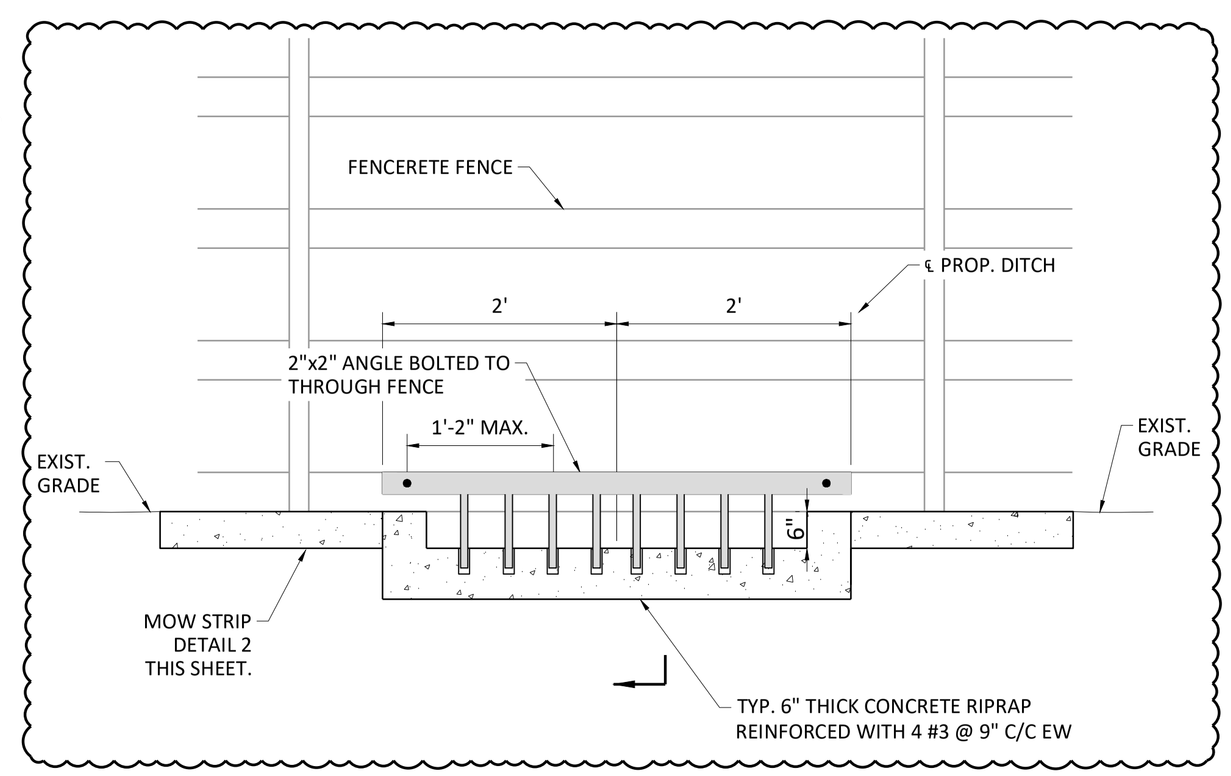

5 / DT-3 CONCRETE DITCH SECTION @ FENCE

NOT TO SCALE

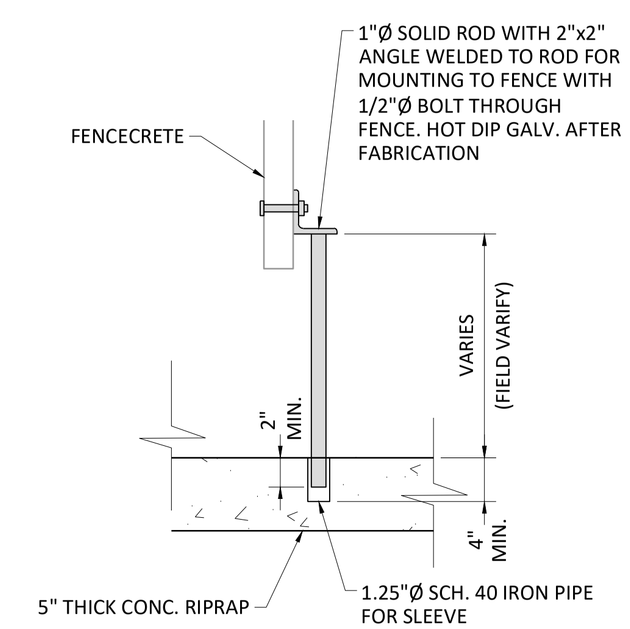

6 / DT-3 FENCE DETAIL @ DITCH

NOT TO SCALE

Freese and Nichols, Inc.
Texas Registered Engineering Firm F-2144

STATE OF TEXAS
DANIEL STOUTENBURG JR.
99271
LICENSED
PROFESSIONAL ENGINEER
01/31/2025

FREESE AND NICHOLS
10431 Morado Circle Building 5
Suite 300
Austin, Texas 78759
Phone - (512) 617-3100
Web - www.freese.com

CITY OF KILLEEN, TEXAS
CHAPARRAL PUMP STATION
CIVIL DETAILS
SITE FENCE DETAILS I

F&N JOB NO.	KIL17231
DATE	DEC 2023
DESIGNED	AL
DRAWN	LMR
REVISED	-
CHECKED	DGS
FILE NAME	CV-PST-DT-PAVE.dwg

NO.	ISSUE	BY	DATE
1	RCP-002 TANK OVERFLOW MODIFICATIONS	DGS	10/24/2024

VERIFY SCALE 0 1
Bar is one inch on original drawing. If not one inch on this sheet, adjust scale.

SHEET DT-3

SEQ. 17

ACAD Rel: 24.2s (LMS Tech)
Filename: N:\WTU\PS AND EST\Drawings\PS\CV-PST-DT-PAVE.dwg
Last Saved: 2/4/2025 1:19 PM Saved By: 02568

Plot Date: 2/10/2025 1:29 PM Plot By: 02568 Filename: N:\WTU\PS AND EST\Drawings\PS\CV-PST-DT-PAVE.dwg

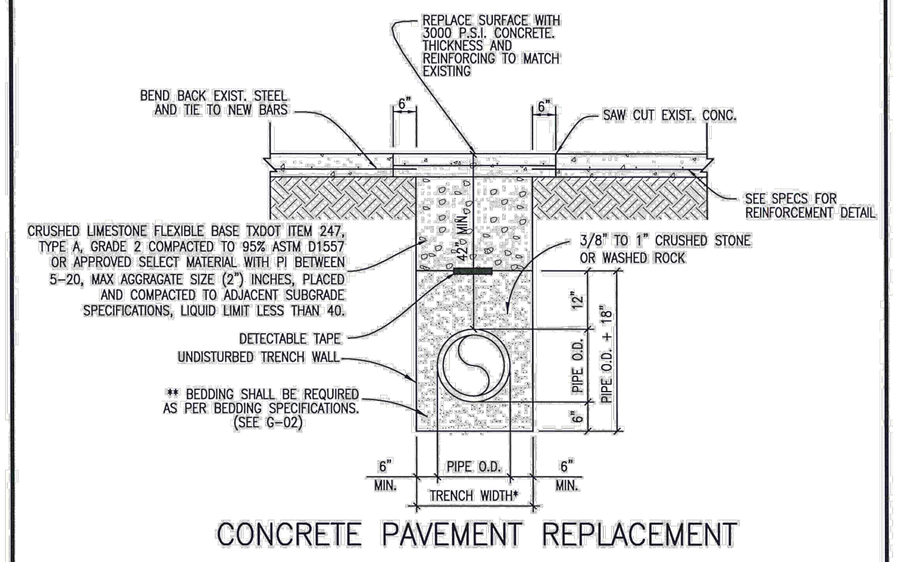

CONCRETE PAVEMENT REPLACEMENT

*TRENCH WIDTHS:

PIPE LESS THAN 20" DIAMETER
1'-0" + PIPE O.D.

20" DIAMETER PIPE AND LARGER
2'-0" + PIPE O.D.

NOTES:

1. THE EXISTING PAVING SHALL BE SAW CUT IN A STRAIGHT LINE A MINIMUM OF 12" WIDER THAN THE UNDISTURBED SIDES OF THE TRENCH, SYMMETRICAL ABOUT THE CENTERLINE OF THE EXCAVATION.
2. IF EXCAVATION AREA IS OPEN FOR TEMPORARY PUBLIC USE, THE SURFACE SHALL BE MAINTAINED LEVEL WITH ADJACENT RIDING SURFACE WITH COLD MIX OR TEMPORARY HOT MIX ASPHALT.
3. IF SELECT MATERIAL IS UTILIZED IN LIEU OF CRUSHED LIMESTONE BASE, A 3 YEAR WARRANTY FOR TRENCH FAILURE IS REQUIRED.
4. ALL DAMAGED AREAS OF PAVEMENT RESULTING FROM CONTRACTOR'S OPERATIONS OUTSIDE THE TRENCH CUT SHALL BE REMOVED AND REPLACED WITH MINIMUM OF 8" OF ROAD BASE OR MATCH EXISTING THICKNESS, WHICHEVER IS GREATER. SURFACE PAVEMENT SHALL BE OF THE SAME KIND AND THICKNESS AS EXISTING.

CITY OF KILLEEN
DEPARTMENT OF PUBLIC WORKS

EMBEDMENT AND BACKFILL STANDARDS
EXISTING OR FUTURE ROADWAY

CONSTRUCTION STANDARDS AND DETAILS

G-06
SCALE: N.T.S.
ISSUE DATE: 08-01-13

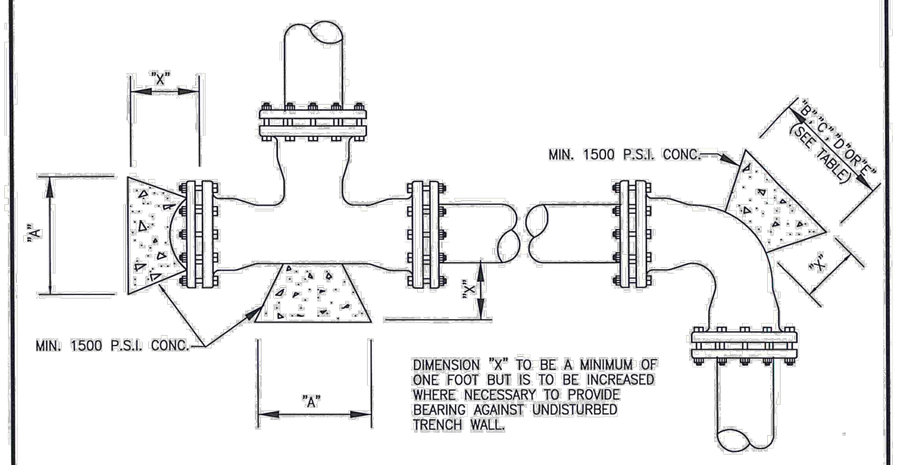

HORIZONTAL BLOCKING TABLE																
PIPE SIZE	"X" DIM.	PLUGS & TEES			90° BENDS			45° BENDS			22 1/2° BENDS			11 1/4° BENDS		
		"A"	MIN. AREA	MAX. VOL.	"B"	MIN. AREA	MAX. VOL.	"C"	MIN. AREA	MAX. VOL.	"D"	MIN. AREA	MAX. VOL.	"E"	MIN. AREA	MAX. VOL.
4"	1'-0"	1'-0"	.83	.05	1'-0"	.83	.05	1'-0"	.83	.05	1'-0"	.83	.05	1'-0"	.83	.05
6"	1'-6"	1'-0"	1.06	.06	1'-2"	1.50	.09	1'-0"	.83	.05	1'-0"	.83	.05	1'-0"	.83	.05
8"	1'-6"	1'-3"	1.89	.11	1'-6"	2.66	.15	1'-3"	1.44	.08	1'-0"	.83	.05	1'-0"	.83	.05
10"	1'-6"	1'-9"	2.95	.17	2'-0"	4.17	.24	1'-6"	2.26	.13	1'-3"	1.15	.07	1'-0"	.83	.05
12"	1'-6"	2'-0"	4.25	.24	2'-3"	6.00	.34	1'-9"	3.25	.18	1'-3"	1.85	.10	1'-0"	.83	.05
16"	2'-0"	2'-7"	7.54	.56	3'-0"	10.65	.79	2'-3"	5.76	.43	1'-8"	2.94	.22	1'-2"	1.48	.11
18"	2'-0"	2'-11"	7.70	.57	3'-5"	10.89	.82	2'-6"	5.89	.44	1'-10"	3.01	.22	1'-5"	1.51	.11
20"	2'-0"	3'-3"	7.86	.59	3'-9"	11.12	.84	2'-9"	6.01	.45	2'-0"	3.07	.23	1'-7"	1.54	.12
24"	2'-0"	3'-8"	11.33	.84	4'-3"	16.00	1.20	3'-2"	8.65	.65	2'-6"	4.42	.33	1'-10"	2.22	.17

NOTE: CALCULATIONS IN MIN. AREA COLUMN ARE IN SQUARE FEET.
CALCULATIONS IN MAX. VOL. COLUMN ARE IN CUBIC YARDS.

ALL FITTINGS SHALL BE WRAPPED IN PLASTIC WHERE CONCRETE IS PLACED.

CITY OF KILLEEN
DEPARTMENT OF PUBLIC WORKS

TYPICAL THRUST BLOCKS FOR
WATER AND FORCE MAINS

CONSTRUCTION STANDARDS AND DETAILS

W-08
SCALE: N.T.S.
ISSUE DATE: 08-01-13

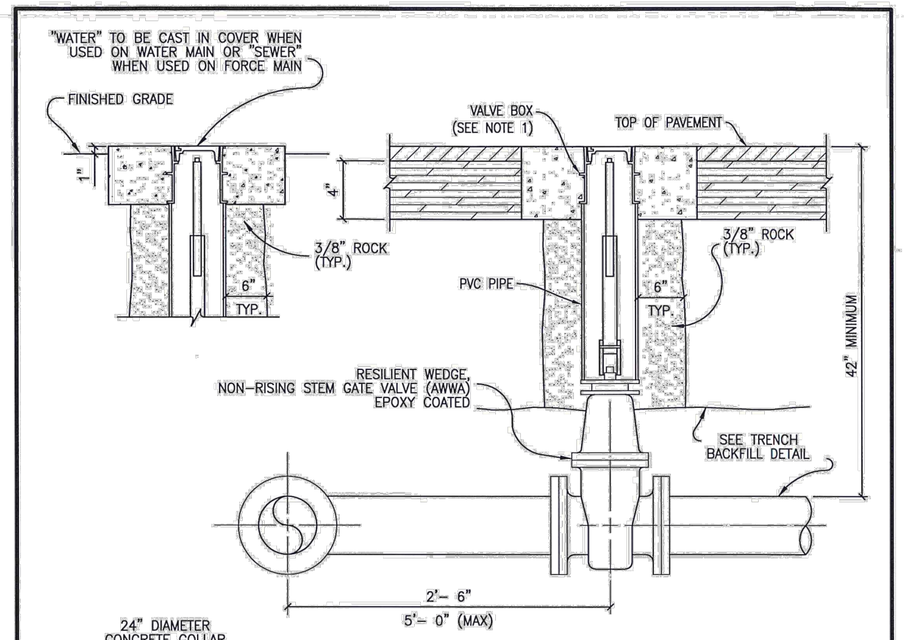

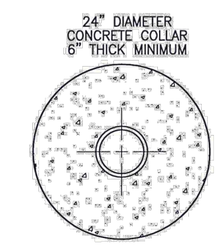

NOTES:

1. VALVE BOX SHALL BE B&H 340-1
2. EXTENSION REQUIRED WHEN VALVE OPERATING NUT IS GREATER THAN 4" FROM VALVE BOX COVER. UNLESS OTHERWISE NOTED ON PLANS, VALVE BOX EXTENSIONS SHALL BE CONSTRUCTED OF PVC C900.
3. ALL FITTINGS SHALL BE WRAPPED IN PLASTIC WHERE CONCRETE IS PLACED.
4. VALVE COLLARS LOCATED WITHIN THE ROADWAY SHALL BE 24"x24" SQUARE.

CITY OF KILLEEN
DEPARTMENT OF PUBLIC WORKS

TYPICAL
VALVE SETTING

CONSTRUCTION STANDARDS AND DETAILS

W-04
SCALE: N.T.S.
ISSUE DATE: 08-01-13

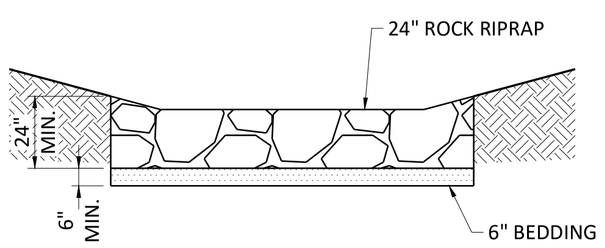

GRADATION FOR BEDDING	
SIEVE SIZE SQUARE MSH	PERCENT PASSING
3 INCH	100
1-1/2 INCH	55-100
3/4 INCH	25-60
3/8 INCH	5-10
NO.4	0-10

GRADATION FOR RIPRAP	
SIEVE SIZE SQUARE MSH	PERCENT PASSING
30 INCH	100
24 INCH	65-100
18 INCH	45-75
12 INCH	25-50
8 INCH	10-30
6 INCH	0-15

1 / DT-6 — 24" ROCK RIP RAP DETAIL
NOT TO SCALE

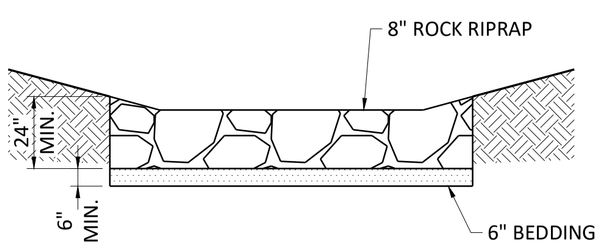

GRADATION FOR BEDDING	
SIEVE SIZE SQUARE MSH	PERCENT PASSING
3 INCH	100
1-1/2 INCH	55-100
3/4 INCH	25-60
3/8 INCH	5-10
NO.4	0-10

GRADATION FOR RIPRAP	
SIEVE SIZE SQUARE MSH	PERCENT PASSING
10 INCH	100
8 INCH	70-100
6 INCH	50-75
3 INCH	20-40
1 1/2 INCH	0-15

1 — 4 / DT-6 — 8" ROCK RIP RAP DETAIL
NOT TO SCALE

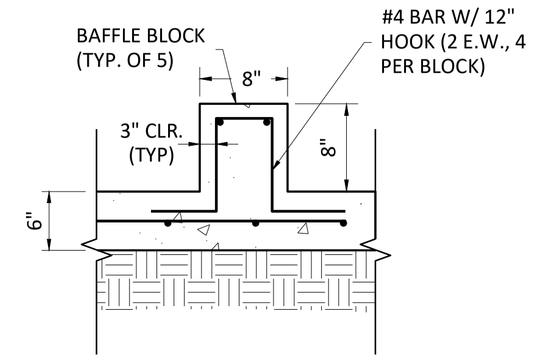

2 / DT-6 — BAFFLE BLOCK DETAIL
NOT TO SCALE

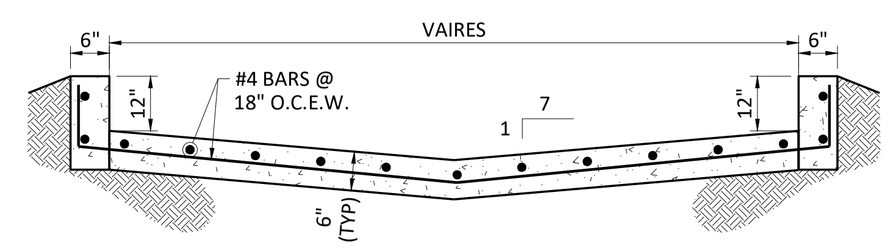

3 / DT-6 — CONCRETE RIP RAP SWALE
NOT TO SCALE

Freese and Nichols, Inc.
Texas Registered Engineering Firm F-2144

STATE OF TEXAS
DANIEL STOUTENBURG JR.
99271
LICENSED
PROFESSIONAL ENGINEER
02/13/2025 3:11:17 PM

FREESE AND NICHOLS
10431 Morado Circle Building 5
Suite 300
Austin, Texas 78759
Phone - (512) 617-3100
Web - www.freese.com

CITY OF KILLEEN, TEXAS
CHAPARRAL PUMP STATION
CITY DETAILS
MISCELLANEOUS CITY DETAILS II

F&N JOB NO.	KILL7231
DATE	DEC 2023
DESIGNED	AL
DRAWN	LMR
REVISED	-
CHECKED	DGS
FILE NAME	CV-PST-DT-CITY.dwg

NO.	ISSUE	BY	DATE
1	RCP-002 TANK OVERFLOW MODIFICATIONS	DGS	2/13/2025

VERIFY SCALE 0 1
Bar is one inch on original drawing. If not one inch on this sheet, adjust scale.

SHEET DT-6
SEQ. 20

ACAD Rel: 24.2s (LMS Tech)
Filename: N:\WTU\PS AND EST\Drawings\PS\CV-PST-DT-CITY.dwg
Last Saved: 2/11/2025 9:51 AM Saved By: 02568

Plot Date: 2/11/2025 9:53 AM Plot By: 02568 Filename: N:\WTU\PS AND EST\Drawings\PS\CV-PST-DT-CITY.dwg

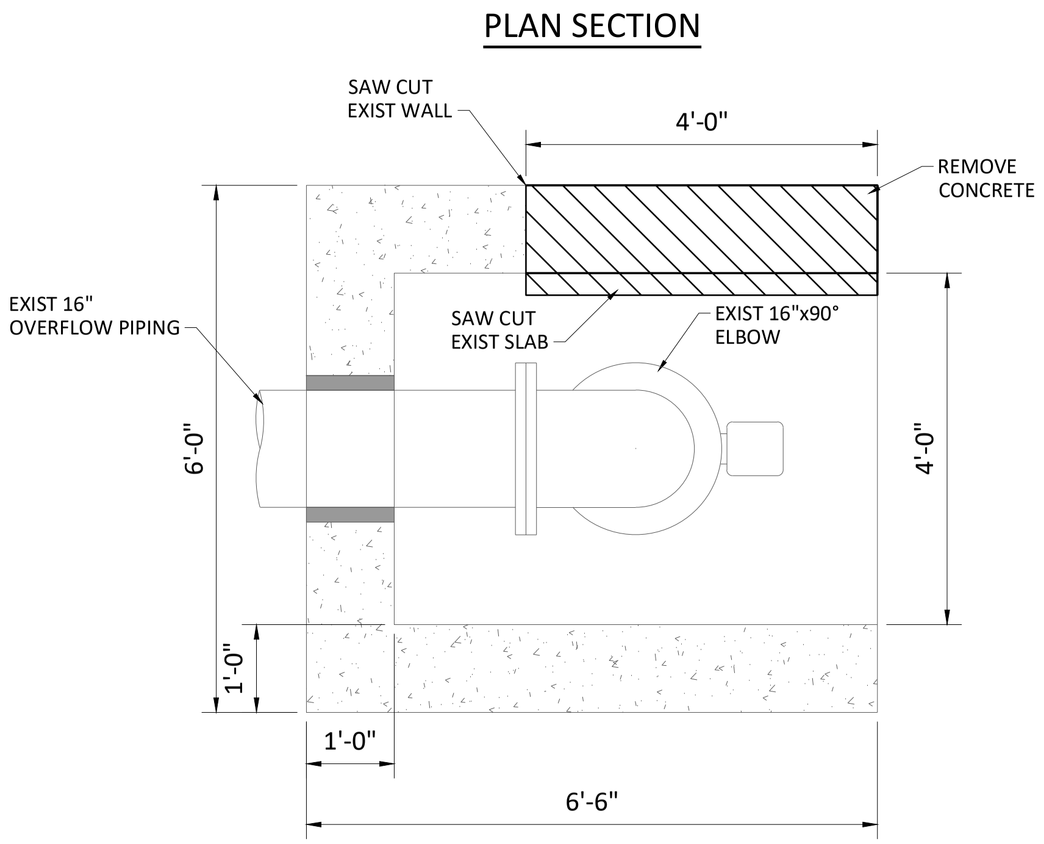

NORTH 1 DT-7

OVERFLOW OUTLET DEMO DETAIL

3/4"=1'-0"

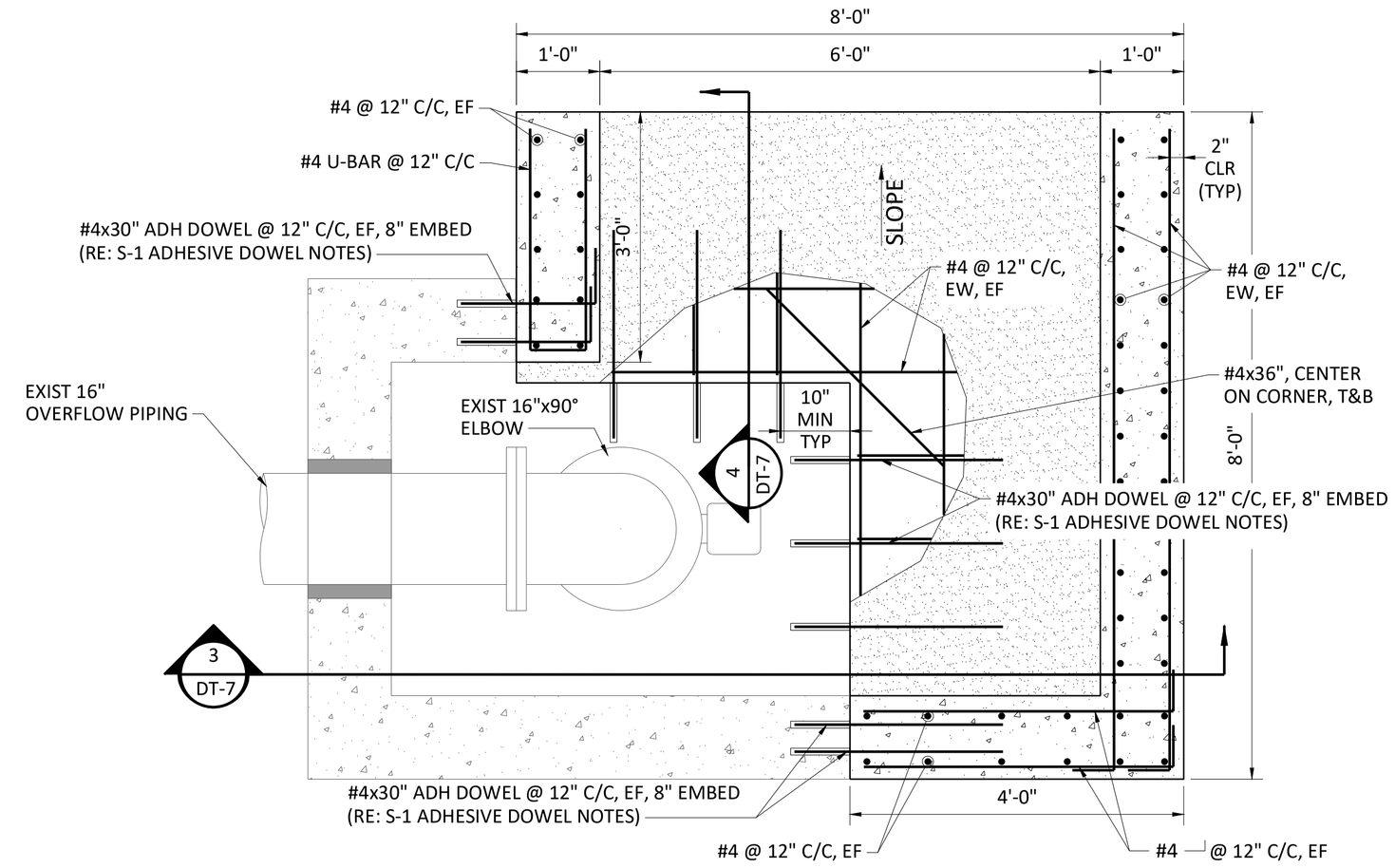

NORTH 2 DT-7

OVERFLOW OUTLET MODIFICATION PLAN

3/4"=1'-0"

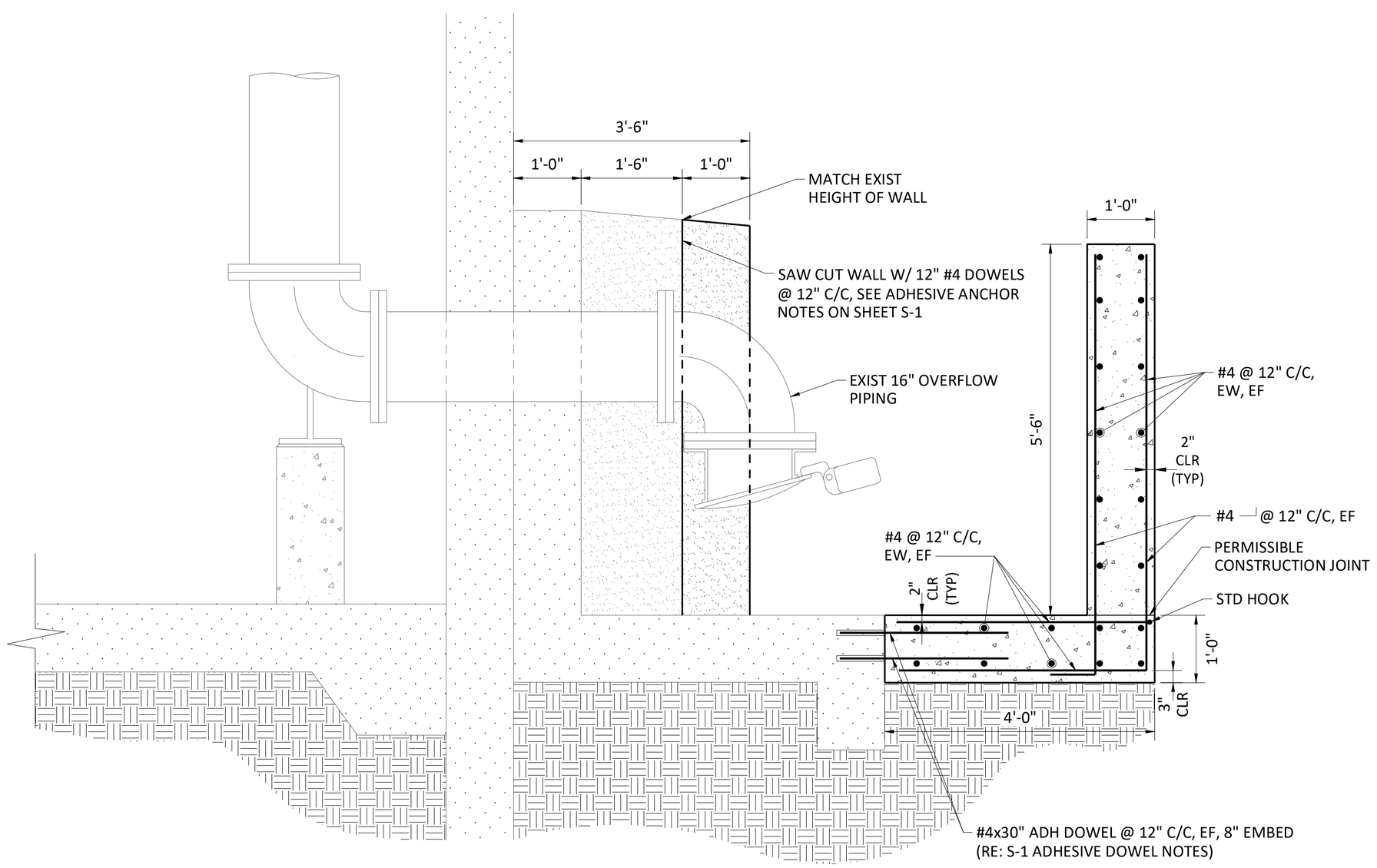

3 DT-7

OVERFLOW OUTLET MODIFICATION SECTION

3/4"=1'-0"

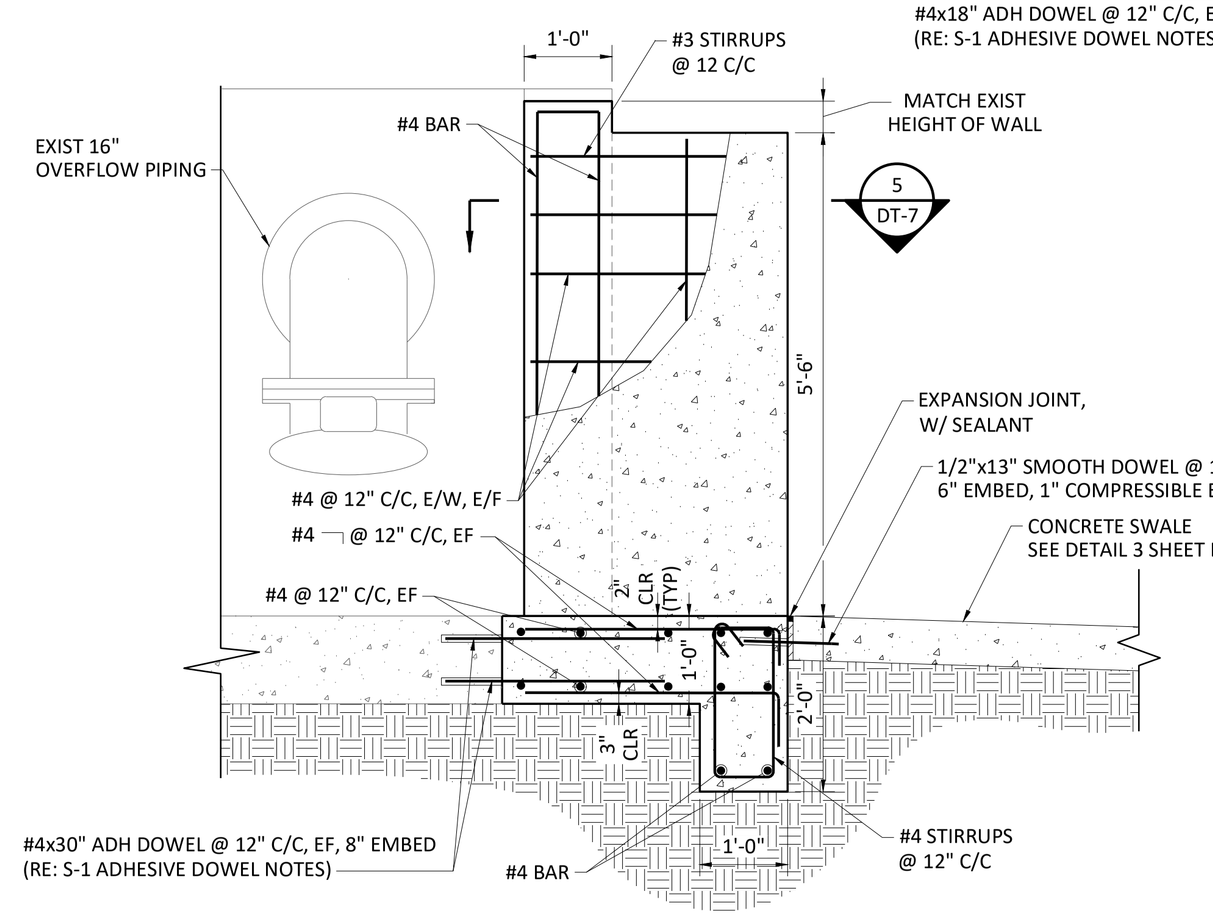

4 DT-7

OVERFLOW OUTLET MODIFICATION SECTION

3/4"=1'-0"

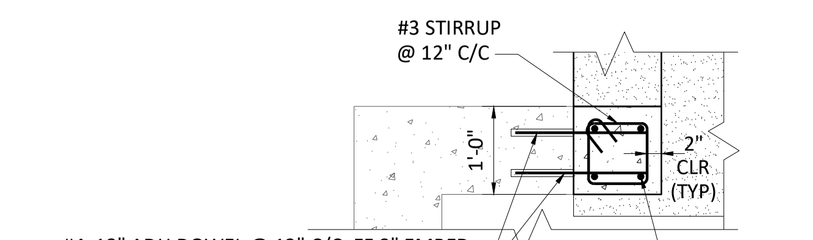

5 DT-7

SECTION

3/4"=1'-0"

0 6" 1' 2'
3/4"=1'-0

Freese and Nichols, Inc.
Texas Registered Engineering Firm F-2144

STATE OF TEXAS
DANIEL STOUTENBURG JR.
99271
LICENSED
PROFESSIONAL ENGINEER
01/02/2024

FREESE AND NICHOLS
10431 Morado Circle Building 5
Suite 300
Austin, Texas 78759
Phone - (512) 617-3100
Web - www.freese.com

CITY OF KILLEEN, TEXAS
CHAPARRAL PUMP STATION
CIVIL
TANK OVERFLOW MODIFICATION

NO.	ISSUE	BY	DATE
1	RCP-002 - WHOLE SHEET	DGS	01/02/2024

VERIFY SCALE
0 1
Bar is one inch on original drawing. If not one inch on this sheet, adjust scale.

F&N JOB NO.	KIL17231
DATE	DEC 2023
DESIGNED	ACR
DRAWN	LMR
REVISED	-
CHECKED	DGS
FILE NAME	CV-PST-DT-MISCDTL.dwg

SHEET
DT-7
SEQ.

ACAD Rel: 24.2s (LMS Tech)
Filename: N:\WTU\PS AND EST\Drawings\PS\CV-PST-DT-MISCDTL.dwg
Last Saved: 2/10/2025 1:34 PM Saved By: 02568

Plot Date: 2/10/2025 4:07 PM Plot By: 02568 Filename: N:\WTU\PS AND EST\Drawings\PS\CV-PST-DT-MISCDTL.dwg